**United States Department of Agriculture**

**Federal Crop Insurance Corporation**

**Risk Management Agency**

**Product Administration and Standards Division**

**FCIC 18010**
**(06-2018)**

# 2019 CROP INSURANCE HANDBOOK

Underwriting and Actual Production History Standards for FCIC Programs Administered under the APH Administrative Regulations and the Basic Provisions for the Common Crop Insurance and Area Risk Protection Policies for 2019 and Succeeding Crop Years.

**UNDITED STATES DEPARTMENT OF AGRICULITURE**
**RISK MANAGEMENT AGENCY**
**KANSAS CITY, MO 64133**

| | |
|---|---|
| **TITLE: 2019 Crop Insurance Handbook** | **NUMBER: FCIC 18010** |
| **EFFECTIVE DATE: 2019 and Succeeding Crop Years** | **ISSUE DATE: June 29, 2018** |
| **SUBJECT:**<br><br>**2019 Crop Insurance Handbook** | **OPI: Product Administration and Standards Division** |
| | **APPROVED:**<br><br>***/s/ Richard Flournoy***<br><br>**Deputy Administrator for Product Management** |

## REASON FOR ISSUANCE

This handbook provides the official FCIC approved underwriting standards for policies administered by AIPs for the General Administrative Regulations, 7 CFR Part 400, Subpart G; Common Crop Insurance Policy Basic Provisions, 7 CFR Part 457, and Area Risk Protection Regulations, 7 CFR Part 407.

This issuance obsoletes Bulletin PM-18-013.

## SUMMARY OF CHANGES

Listed below are the changes with significant content change. Minor changes and corrections are not included in this listing.

| Reference | Description of Change: |
|---|---|
| Throughout Handbook | Updated Years. |
| Para. 916D | Added SCO Coverage Percentage. |
| Para. 918A(3) | Added Coverage Percentage to SCO Supplemental Protection calculation. |
| Para. 1021H | Changed example to note Dry Beans CP allow OUs by type. |
| Para. 1026(3) | Added clarifying language the production evidence must match the production certified by the insured and reference to Para. 1597. |
| Para. 1037(2) | Clarified that if insured does not qualify for separate EUs by irrigated and non-practices when elected, unit structure is assigned for both irrigation practices. |
| Para. 1087 B & C | Clarified that assigned yields with ‘P” yield descriptor are duplicated to the appropriate APH databases. |
| Para. 1219A | Corrected reference to LAM. |
| Para. 1221 | Added clarifying language. |
| Para. 1302A | Added unharvested with harvest incomplete as a kind of acreage that must be reported to the acreage that must be reported. For ARPI policies, if the acreage is unharvested, the insured must certify either unharvested and destroyed, unharvested and put to another use, unharvested appraised, or unharvested with harvest incomplete. |

**SUMMARY OF CHANGES (Continued)**

| Reference | Description of Change: |
|---|---|
| Para. 1302D | Added exception of assigned yields not applying if the difference between the yield certified and the verifier determined yield is within tolerance, that the verifier determined yield would be the assigned yield when assigned yield apply and is the verifier determined yield less than the assigned yield reference to Para. 1597. |
| Para. 1308 | Added unharvested with harvest incomplete as a production record type for ARPI. |
| Para. 1310H | Clarified there must be a loss in production due to UUF or a third party. |
| Para. 1402A | Clarified that insureds must have acceptable production evidence to support the information on their production report. |
| Para. 1403B | Clarified that non-loss unit(s) use the production evidence's adjustments to production. Added reference to the LAM for adjustments to production evidence on claims for indemnities. |
| Para. 1404 | Added reference to Para. 1302 and added exception to production evidence no longer available due to catastrophic event. |
| Para. 1416 | Moved (4) to (6) renumbered and (6) Must be provided by the insured if not on production evidence. |
| Para. 1433A(3) | Modified language to indicate verifiable weight records must be provided if insured is using post-harvest calibration. |
| Para. 1435 (1) | Added grain carts to list of field harvest records. |
| Para. 1503A(e) | Added exception with temporary yield descriptor "JJ" for delayed claims. |
| Para. 1503B(2) | Clarified the assigned yield is 65% of the applicable T-Yield when there is no prior year's approved yield is available and added exception that the actual yield must be used if the actual yield determined by review is less than the assigned yield. Added reference to Para. 1597 for exceptions to assigned yields. |
| Para. 1505E | Added organic exception code "T" for acreage transitioning to certified organic practice without an organic plan and insured under the conventional practice. |
| Para 1592 | Added exception for Category C crops requiring changes in production methods be identified on the PAW to identify whether a PAIR and RO DY is required due to the change in production method and a reference to Para. 1854 for organic Category C crops. |
| Para. 1592C | Added exception to establish separate APH databases for acreage transitioning to certified organic without a plan insured under the conventional practice. |
| Para. 1595 | Added clarifying language on acceptable production evidence and reference to Para. 1597. Added exception to the application of assigned yields if the difference between the yield certified and the verifier determined yield is within tolerance as provided in Para. 1597. Also, the actual yield is used when an assigned yield applies and the verifier determined yield is less than the assigned yield. Added that yields certified for plans of insurance that require production reporting but are not APH-based must be corrected if different than the verifier determined yield. |
| Para. 1596 | Added clarifying language on AIP/USDA error and misreported production and reference to Para. 1597. |

**SUMMARY OF CHANGES (Continued)**

| Reference | Description of Change: |
|---|---|
| Para. 1597 | Added clarifying language to exceptions to assigned yields and removed references to average yield, and approved APH yield in (3). |
| Para. 1702Q | Added instructions for establishment of separate APH databases for acreage transitioning to organic without an organic plan. |
| Para. 1738(1) | Removed the phrase "does not provide acceptable production reports due to lack of acceptable supporting production evidence". |
| Para. 1738(1)(b) | Removed the phrase "for more than 2 crop years". |
| Para. 1748 | Added Alfalfa Seed to list of crops for which the AIP may approve the MYs. |
| Para. 1749 | Changed MY request deadline from no later than 20 calendar days after PRD to no later than 30 calendar days after PRD. |
| Para. 1756 | Changed deadline from no later than 20 to 30 calendar days after the PRD for insureds to request another initial MY for a new P/T or added land for which an approved MY has not been previously established. |
| Para. 1803D | Clarified when production from uninsurable acreage is commingled with production from insurable acreage: total acreage includes blocks that have met minimum production requirements and those that have not met production minimums; the commingled production and all acreage are entered in the APH database for all years, not just the most recent production year for the acreage just reaching insurability; and the commingled acres and production must meet production minimums. |
| Para. 1821 | Change that the required information block for Rootstock on the PAW is applicable when required by the crop policy: Arizona-California Citrus Crop, Macadamia Nuts, Peaches, Pistachio, Plum, Prune, Stonefruit, and Walnuts; and for grapes, to indicate whether rootstock is Phylloxera resistant rootstock.<br><br>Clarified in the required information of percent stand that if the decrease in percent stand is less than 20% (or the percentage specified in the applicable SP) based on the original planting pattern, a RO DY request is not required<br><br>Clarified in the required information that the question related to if insured is sales as direct market or is vertically integrated is for production record requirements only and will not trigger a PAIR. |
| Para. 1823 | Added exception to PAW triggering a PAIR and RO DY request if percent stand was decreased less than 20 percent. |
| Para. 1851 | Clarified block reporting is only consider an optional unit if the policy provisions are met. |
| Para. 1854 | Clarified requirements to establish an APH once acreage becomes certified organic. |
| Para. 1858 | Clarified insurability requirements when following T-Yield instructions after grafting/dehorning is completed. |
| Para 1860 | Clarified the adding acres to both an existing and separate APH database. |
| Para. 1862A | Change requirement for Downward Trending test even if YE is applicable. |
| Para. 1862F | Added comment for AIP to provide notification timely to insured. |

**SUMMARY OF CHANGES (Continued)**

| Reference | Description of Change: |
|---|---|
| Para. 1864 | Modified instructions on what varietal apple to use to calculate the "F" yield descriptor for grafted apples. |
| Para. 1943B | Clarified that apples used for fresh apple slices are considered fresh if the price received is commensurate with a fresh apple price. |
| Para. 2050 | Updated paragraph to reflect the current process for calculating approved yields for Hybrid Seed Corn and Hybrid Sorghum Seed. |
| Part 21 | Clarified when T-Revenue was used as an equivalent of a T-Yield versus assigned yield throughout Part 21. |
| Para. 2101 | Clarified T-Revenues are used as an equivalent of a T-Yield for annual crops and assigned yields are also referred to as T-Revenue. |
| Para. 2131 | Added comment when assigned T-Revenue are considered zero production when determining insurability. |
| Para. 2141A(2)(a) | Corrected the example. |
| Para. 2141E | Clarified when added insurable acreage is added during the second year of the two-year coverage module. |
| Para. 2146 | Clarified PAW requirements if damage is caused by diseased, the type of disease should be included. |
| Exh. 9C | Added SCO Coverage Percentage to SCO calculation examples. |
| Exh. 15W(10) | Added yield descriptor "JJ". |
| Exh. 17C | Added Alfalfa Seed to table. |
| Exh. 17M | Updated to include ARPI protection factor and Annual Forage productivity factor reductions. |
| Exh. 18M&O | Updated Examples. |
| Exh. 20 | Moved the hybrid seed exhibits together and added a Hybrid Seed Corn or Sorghum Seed Approved Yield Process exhibit (Exh. 20C). |

**2019 CROP INSURANCE HANDBOOK**

**CONTROL CHART**

| | TP Page(s) | TC Page(s) | Text Page(s) | Exhibit Page(s) | Date | Directive Number |
|---|---|---|---|---|---|---|
| Current Index | 1-6 | 1-20 | 1-532 | 533-769 | June 2018 | 18010 |

## TABLE OF CONTENTS


**PART 1 GENERAL INFORMATION**

1 General Information ..... 1
2 Responsibilities ..... 3
3 Title VI of the Civil Rights Act of 1964 ..... 4
4-200 (Reserved) ..... 4

**PARTS 2-8**

201-300 (Reserved) ..... 5
301-400 (Reserved) ..... 7
401-500 (Reserved) ..... 9
501-600 (Reserved) ..... 11
601-700 (Reserved) ..... 13
701-800 (Reserved) ..... 15
801-900 (Reserved) ..... 17

**PART 9 ENDORSEMENTS AND OPTIONS**

901 General Information ..... 19
902 Catastrophic Risk Protection Endorsement ..... 19
903 High-Risk Land Exclusion Option ..... 20
904 Hail and Fire Exclusion Option ..... 22
905 Apple Fresh Fruit Quality Adjustment Option ..... 24
906 Wheat or Barley Winter Coverage Endorsement ..... 25
907 Dry Pea WCO ..... 26
908 Fresh Market Sweet Corn Minimum Value Option ..... 28
909 Fresh Market Pepper Minimum Value Option ..... 29
910 Fresh Market Tomato (Dollar Plan) Minimum Value Option ..... 30
911 Mint Winter Coverage Option ..... 31
912 Northern Potato Policy Endorsements ..... 32
913 Fresh Pear Quality Adjustment Endorsement ..... 37
914 Table Grape Protective Cover Option ..... 37
915 Contract Price Addendum (CPA) ..... 38
916 SCO Endorsement General Information and Requirements ..... 43
917 SCO Endorsement Acreage Reporting ..... 47
918 SCO Endorsement Determining Supplemental Protection and Indemnity ..... 48
919-1000 (Reserved) ..... 50

**PART 10 UNITS**

**Section 1 Basic Units**

1001 Availability ..... 51
1002 Premium Discount ..... 51
1003 CAT Endorsement ..... 52

**TABLE OF CONTENTS**

**PART 10 UNITS (Continued)**

**Section 1 Basic Units (Continued)**

1004 APH Database Establishment ..... 52
1005 APH Databases Below BU Level ..... 52
1006 Commingled Acres and Production ..... 52
1007-1020 (Reserved) ..... 53

**Section 2 Optional Units**

1021 Availability ..... 54
1022 APH Database Below OU Level ..... 58
1023 Combination of OUs ..... 58
1024 OU Qualifications ..... 58
1025 Production Evidence ..... 60
1026 Assigned Yields ..... 61
1027 Determining OUs ..... 62
1028-1030 (Reserved) ..... 62

**Section 3 Enterprise Units**

1031 Availability ..... 63
1032 EU Election ..... 63
1033 EU Qualifications ..... 64
1034 Reporting Requirements ..... 68
1035 Discounts ..... 69
1036 Added Land and New Crop P/T ..... 69
1037 Assigned Unit Structure ..... 69
1038 Assigned Yields ..... 70
1039 Cups ..... 70
1040-1044 (Reserved) ..... 70

**Section 4 Whole Farm Units**

1045 Availability ..... 71
1046 WU Election ..... 71
1047 WU Qualifications ..... 71
1048 Separate Administrative Fees ..... 72
1049 Reporting Requirements ..... 73
1050 Unit Structure Assignment ..... 74
1051-1060 (Reserved) ..... 74

**Section 5 Unit Numbering**

1061 General Information ..... 75
1062 The Structure Code ..... 75
1063 Unit Number ..... 75
1064 Unit Numbering Constancy ..... 79
1065 Unit Number Consistency ..... 80

## TABLE OF CONTENTS

**PART 10 UNITS (Continued)**

**Section 5 Unit Numbering (Continued)**

1066 Master Yield Summary APH Database ..... 80
1067-1072 (Reserved) ..... 80

**Section 6 Sections, Section Equivalents, and FSA FNs**

1073 Provisions ..... 81
1074 Unit Division Option – Illinois, Indiana, Ohio, and Texas ..... 83
1075-1080 (Reserved) ..... 85

**Section 7 Combining and Dividing BUs, OUs, EUs, and WUs**

1081 General Information ..... 86
1082 Establishing Separate APH Databases ..... 86
1083 Maintaining Separate APH Databases Within BUs, EUs, or WUs ..... 87
1084 Situations that Require Combining and Dividing APH Databases ..... 88
1085 Agreements to Combine OUs for Category B Crops ..... 89
1086 Combining APH Databases ..... 92
1087 Dividing APH Yield History for Category B Crops ..... 93
1088 Dividing a BU into Additional BUs or OUs, or OUs into Further OUs for Category C Crops ..... 97
1089 Adding Land to an Existing Unit for Category B Crops ..... 98
1090 Retaining Yield History for the Same Land ..... 99
1091-1100 (Reserved) ..... 99

**PART 11 UNDERWRITING RULES FOR SPECIFIC PRACTICES**

**Section 1 Irrigated Practice**

1101 IRR Practice Guidelines ..... 101
1102 Insurable Acreage ..... 101
1103 Applicable Terms ..... 101
1104 Factors to Consider for IRR Practice Reporting and Coverage ..... 103
1105 Failure to Carry Out Good IRR Practice ..... 104
1106 IRR Practice Guidelines for PP ..... 104
1107 Determined IRR Yields ..... 105
1108 Reporting Production and Establishing APH Databases for IRR and NI Acreage ..... 109
1109 Special Requirements for Center Pivot Irrigation Systems ..... 109
1110-1120 (Reserved) ..... 111

**Section 2 Summer Fallow Practice**

1121 General Information and Insurability ..... 112
1122 SF APH Database Instructions ..... 115
1123-1144 (Reserved) ..... 116

## TABLE OF CONTENTS

### PART 11 UNDERWRITING RULES FOR SPECIFIC PRACTICES (Continued)

**Section 3 Skip-Row Planted**

1145 Insurability ..... 117
1146 Skip-Row Planted Corn ..... 117
1147 Skip-Row Planted Grain Sorghum ..... 120
1148 Skip-Row Planted Cotton and ELS Cotton ..... 121
1149 Percent Planted Factors ..... 126
1150-1200 (Reserved) ..... 126

### PART 12 ACREAGE REPORT

**Section 1 General Requirements**

1201 General Information ..... 127
1202 Filing Requirements ..... 127
1203 Failure to Submit Acceptable Acreage Report ..... 129
1204 Inaccurate Acreage Reports ..... 129
1205-1210 (Reserved) ..... 130

**Section 2 Acreage Report Elements**

1211 Required Elements ..... 131
1212 Date Planting Completed ..... 134
1213 Acreage Type ..... 134
1214 Prevented Planting Acreage ..... 136
1215 Late Planted Acreage ..... 137
1216 Insurable Acreage ..... 140
1217 Uninsurable Acreage ..... 146
1218 Uninsured Acreage of an Insured Crop ..... 150
1219 Unreported Acreage or Units ..... 150
1220 Zero Acreage Report ..... 151
1221 Preliminary Acreage Reports for CCIP ..... 152
1222 Reporting IRR Practices for CCIP ..... 152
1223 First (1st) Insured Crop Planted and Second (2nd) Crop ..... 152
1224-1230 (Reserved) ..... 161

**Section 3 Acreage Report Revision**

1231 Overview ..... 162
1232 Acceptable Revisions for CCIP ..... 162
1233 Acceptable Acreage Report Revisions for ARPI ..... 172
1234 Measurement Services Requested for Acreage Reports ..... 172
1235 Examples for Acreage Report Revisions ..... 174
1236 Identifying Acreage Damaged by UUF or a Third Party (CCIP policies only) ..... 177
1237-1300 (Reserved) ..... 177

## TABLE OF CONTENTS

### PART 13 PRODUCTION REPORT


1301 General Information ..... 179
1302 Acceptable Production Report ..... 180
1303 Production Reporting Requirements ..... 183
1304 Production Included on Production Report and in the APH Database, When APH Databases are Applicable ..... 186
1305 Production Included on Production Report but not in the APH Database ..... 189
1306 Continuity ..... 192
1307 Break in Continuity ..... 193
1308 Required Elements of Production Report ..... 194
1309 Verification, Review and Correction ..... 197
1310 Production ..... 198
1311 Multi-Year Production Report ..... 203
1312 Production Reporting Differences for ARPI and CCIP ..... 204
1313-1400 (Reserved) ..... 204


### PART 14 PRODUCTION EVIDENCE

**Section 1 General Information**


1401 Acceptable Production Evidence ..... 205
1402 Certifying Production ..... 205
1403 Unit of Measure and Production Adjustments ..... 206
1404 Record Retention Period ..... 207
1405-1414 (Reserved) ..... 208


**Section 2 Acceptable Verifiable Records**


1415 Crops Requiring Verifiable Records ..... 209
1416 Records of Production Commercially Sold To or Stored By a Disinterested Third-Party ..... 209
1417 Claim for Indemnity ..... 210
1418 FSA or CCC Verified Documents ..... 210
1419 Authorized AIP or FSA Personnel Appraisals of Unharvested Acreage ..... 210
1420 Authorized AIP or FSA Personnel Measurement of Farm Stored Production ..... 212
1421 Pre-harvest Appraisal and Other Record Types ..... 212
1422-1430 (Reserved) ..... 215


**Section 3 Acceptable Farm Management Records**


1431 Crops that Qualify for Farm Management Records ..... 216
1432 Measurement of Farm Stored Production by Insured ..... 216
1433 Automated Yield Monitoring Systems ..... 216
1434 Livestock Feeding Records ..... 218
1435 Field Harvest Records ..... 218

## TABLE OF CONTENTS

**PART 14 PRODUCTION EVIDENCE (Continued)**

**Section 4 Vertically Integrated (Continued)**

1436 Vertically Integrated Producer Defined ..... 219
1437 Acceptable Records for Vertically Integrated Producers ..... 219
1438 Required Documentation ..... 219
1439-1450 (Reserved) ..... 219

**Section 5 Direct Marketing**

1451 Direct Marketing Defined ..... 220
1452 Direct Marketing Requirements ..... 220
1453 Acceptable Records for Direct Marketing Producers ..... 220
1454-1500 (Reserved) ..... 220

**PART 15 APH DATABASE**

**Section 1 General Information**

1501 APH Database Requirements ..... 221
1502 The Base Period ..... 221
1503 Types of Yields ..... 221
1504 Yield Descriptors ..... 224
1505 Required Separate APH Database ..... 224
1506 Production or Acreage Not to be Included ..... 227
1507 Transfer of APH Data ..... 227
1508 Use of Another Person's Production History - BFR ..... 229
1509 Use of Another Person's Acreage and Production History ..... 231
1510 Use of APH When Insureds Change or Land is Transferred to Another Person ..... 233
1511 APH Database Instructions ..... 236
1512 Impact of Combining and Dividing ..... 238
1513-1520 (Reserved) ..... 238

**Section 2 APH Database and Yield Determinations Combined and Divided**

1521 General Rules for Combining and Dividing APH Databases ..... 239
1522 Combining APH Databases ..... 240
1523 Dividing APH Databases ..... 241
1524 No Actual or Assigned Yields ..... 246
1525-1540 (Reserved) ..... 246

**Section 3 APH Yield Adjustment**

1541 Yield Adjustment General Information ..... 247
1542 Election of APH Yield Adjustment ..... 247
1543 Cancelling APH Yield Adjustments ..... 247
1544 T-Yields Used for YA ..... 248
1545 Calculating Approved APH Yields When YA is Elected ..... 250
1546 Determining Premium Rates ..... 253

## TABLE OF CONTENTS

**PART 15 APH DATABASE (Continued)**

**Section 1 APH Yield Adjustment (Continued)**

1547-1550 (Reserved) ..... 253

**Section 4 Yield Exclusion**

1551 YE General Information ..... 254
1552 Eligibility for YE ..... 254
1553 Cancellation ..... 255
1554 Transfers ..... 255
1555 Applicability of WAs ..... 255
1556 Applicability of Yield Limitations and Yield Reductions ..... 255
1557 Actual Yields Eligible for YE ..... 256
1558 Exclusion of an Actual Yield for an Eligible Crop Year Within an APH Database ..... 256
1559 YE Interaction with YA ..... 258
1560 Impact of YE Specific to Category B Crops ..... 259
1561 Impact of YE for Perennial Crops (Category C/Pecan Revenue) ..... 260
1562 Impact of YE for RO Determined Yields ..... 261
1563 Adjusted Yield ..... 261
1564 Rate Yield Calculation ..... 261
1565 Calculating the Yields for APH Databases When YE is Elected ..... 262
1566 Determining Premium Rates When YE Applies to an APH Database ..... 263
1567-1570 (Reserved) ..... 263

**Section 5 Yield Cup Option**

1571 General Information ..... 264
1572 Eligibility for Cups ..... 264
1573 Applicability of Cups ..... 265
1574 Applicability of WAs ..... 267
1575 Applicability of Yield Floors and Yield Reductions ..... 267
1576 Cup Interaction with YA and YE ..... 268
1577 Impact of Cup Specific to Category B Crops ..... 268
1578 Impact of Cup for RO Determined Yields ..... 269
1579 Adjusted Yield ..... 269
1580 Calculating Yields for an APH Database When Cup Applies ..... 269
1581-1587 (Reserved) ..... 271

**Section 6 Yield Reductions**

1588 General Information ..... 272
1589 General Rules ..... 273
1590 Excessive Actual Yields ..... 275
1591 Inconsistent Approved APH Yields and Insured Acreage Limitations ..... 277
1592 Different Production Methods ..... 282
1593-1594 (Reserved) ..... 285

## TABLE OF CONTENTS

**PART 15 APH DATABASE (Continued)**

**Section 7 Reviewing and Correcting APH Yields (Continued)**

1595 Review Requirements ..... 286
1596 Correcting APH Yields ..... 286
1597 Exceptions to Assigned Yields ..... 288
1598-1600 (Reserved) ..... 289

**PART 16**

1601-1700 (Reserved) ..... 291

**PART 17 CATEGORY B CROP PROCEDURES**

**Section 1 APH Database**

1701 General Information ..... 293
1702 Methods to Establish an APH Database ..... 293
1703-1706 (Reserved) ..... 301

**Section 2 T-Yields**

1707 General Information ..... 302
1708 T-Yield Methods ..... 302
1709-1712 (Reserved) ..... 303

**Section 3 Reporting Production for P/T/TMAs**

1713 Applicability ..... 304
1714 Separate Production ..... 304
1715 Separating Commingled Production ..... 304
1716-1720 (Reserved) ..... 306

**Section 4 Yield Floors**

1721 General Information ..... 307
1722 Yield Floor Calculations ..... 307
1723 Determining Premium Rates ..... 307
1724-1730 (Reserved) ..... 307

**Section 5 New Producer**

1731 New Producer Qualifications ..... 308
1732 Deadline ..... 313
1733 Verification ..... 313
1734 Documentation ..... 313
1735 Approved APH Yield Determination ..... 313
1736 Added Land and New Crop P/T APH Database ..... 315
1737 For Subsequent Crop Years ..... 315

## TABLE OF CONTENTS

**PART 17 CATEGORY B CROP PROCEDURES (Continued)**


**Section 6 RO Determined Yields**
1738 General Information ..... 316
1739 Verifier Responsibilities ..... 316
1740-1746(Reserved) ..... 316

**Section 7 Master Yields**
1747 General Information ..... 317
1748 Initial MY Approval Authorities ..... 317
1749 Deadlines ..... 319
1750 General Information ..... 319
1751 Cancelling MYs ..... 319
1752 Requirements for Establishing Initial MY(s) ..... 320
1753 Production Reporting Requirements ..... 321
1754 Establishing a MY ..... 322
1755 MY Summary APH Database Unit Number ..... 326
1756 Updating Established MY(s) ..... 326
1757 Cups ..... 327
1758 Yield Adjustment ..... 327
1759 Yield Exclusion ..... 327
1760 Certified Organic and Transitional Practices ..... 327
1761-1762 (Reserved) ..... 327

**Section 8 Acreage Emerging From a USDA Program, New Breaking, and Native Sod**
1763 Acreage Emerging From a USDA Program ..... 328
1764 New Breaking Acreage ..... 330
1765 Native Sod Acreage ..... 332
1766-1770 (Reserved) ..... 335

**Section 9 Added Land**
1771 General Information ..... 336
1772 AIP Responsibilities ..... 336
1773 APH Databases for Added Land ..... 336
1774 Methods for Determining Approved APH Yields for Added Land ..... 337
1775 Cropland Acreage Limitations ..... 344
1776 AIP Review and Verification Prior to Payment of Indemnity ..... 349
1777 Added Land Yield Descriptors and Indicators ..... 349
1778-1786 (Reserved) ..... 349

**Section 10 Yield Determination That Do Not Qualify as Added Land**
1787 Added Crop/P/T APH Databases ..... 350
1788 New Crop/P/T APH Databases ..... 350
1789-1790 (Reserved) ..... 351

## TABLE OF CONTENTS

**PART 17 CATEGORY B CROP PROCEDURES (Continued)**

**Section 11 Switching from a Non-APH Based Policy to a CCIP Policy**
1791 APH Database Impacts When Prior Plan of Insurance Required a Production Report ..... 352
1792 APH Database Impacts When Prior Plan of Insurance Does Not Require a Production Report 354
1793-1800 (Reserved) ..... 356

**PART 18 CATEGORY C CROPS**

**Section 1 General Information**
1801 Background ..... 357
1802 Insured Crop ..... 357
1803 Crops with Minimum Age and/or Production Requirements ..... 358
1804-1806 (Reserved) ..... 361

**Section 2 Acreage**
1807 General Information ..... 362
1808 Acceptable Forms of Acreage Measurement ..... 362
1809 Acreage Measurement Methods ..... 363
1810 Acreage Adjustments ..... 363
1811 Prior Acreage Removed ..... 366
1812-1816 (Reserved) ..... 366

**Section 3 Age/Leaf Year Determinations**
1817 All Crops, except Citrus and Macadamia ..... 367
1818 Arizona-California Citrus and Texas Citrus Fruit ..... 368
1819 Macadamia Nuts ..... 369

**Section 4 Producer's Pre-Acceptance Worksheet (PAW)**
1820 General Information ..... 370
1821 PAW Elements ..... 370
1822 AIP PAW Review ..... 375
1823 PAW Triggers a PAIR ..... 375
1824-1836 (Reserved) ..... 376

**Section 5 Perennial Crop Pre-Acceptance Inspection Report (PAIR)**
1837 General Information ..... 377
1838 PAIR Requirement ..... 377
1839 PAIR Waivers ..... 378
1840 PAIR Deadline ..... 378
1841 PAIR Completion Requirements ..... 378
1842 PAIR Elements ..... 379
1843-1849 (Reserved) ..... 385

## TABLE OF CONTENTS

### PART 18 CATEGORY C CROPS (Continued)

**Section 6 APH Database**

1850 APH Database Establishment ..... 386
1851 Block Reporting ..... 386
1852 Separate P/T/TMA/Other Characteristics ..... 386
1853 Commingled Production ..... 387
1854 Organic Perennials ..... 388
1855 Acreage Less than a Tenth of an Acre ..... 391
1856 APH Database Establishment Methods ..... 391
1857 Multi-Purpose Production and Yield Worksheet ..... 393
1858 T-Yield Instructions ..... 393
1859 Weighted Average Age/Density ..... 394
1860 Added Insurable Acreage ..... 396
1861 Added Land/New Producers ..... 399
1862 APH Database Tests for High Variability of Actual Yields ..... 400
1863 Approved APH Yield ..... 407
1864 Establishing APH Databases for Grafted Apples in the States of Idaho, Oregon and Washington ..... 407
1865-1870 (Reserved) ..... 408

**Section 7 Yield Information**

1871 Yield Indicators ..... 409
1872 Yield Adjustments ..... 409
1873 Floors ..... 409
1874 Cups ..... 409
1875-1880 (Reserved) ..... 409

**RO Determined Yields**

1881 Situations for a RO Determined Yield Request ..... 410
1882 Verifier Responsibilities ..... 412
1883-1900 (Reserved) ..... 412

### PART 19 ADDITIONAL PROVISIONS BY CROP

**Section 1 Category B Crops**

1901 General Information ..... 413
1902 Cabbage (Fresh Market and Processing) ..... 413
1903 Coarse Grains: Corn, Soybeans, and Grain Sorghum ..... 415
1904 Cotton and ELS Cotton ..... 420
1905 Cultivated Wild Rice ..... 421
1906 Dry Beans ..... 422
1907 Dry Peas ..... 424
1908 Forage Production ..... 427
1909 Fresh Market Beans ..... 429

## TABLE OF CONTENTS

## PART 19 ADDITIONAL PROVISIONS BY CROP (Continued)

### Section 1 Category B Crops (Continued)

1910 Green Peas ..... 434
1911 Mint ..... 435
1912 Mustard ..... 435
1913 Onions ..... 435
1914 Peanuts ..... 436
1915 Popcorn ..... 437
1916 Potatoes ..... 438
1917 Processing Beans ..... 439
1918 Processing Sweet Corn ..... 440
1919 Rice ..... 440
1920 Small Grains: Wheat, Barley, Oats, Rye, Buckwheat, and Flax ..... 441
1921 Sugar Beets ..... 443
1922 Sugarcane ..... 445
1923 Tobacco ..... 447
1924 Tomatoes, Fresh Market Guaranteed Production ..... 449
1925 Tomatoes Processing ..... 449
1926-1940 (Reserved) ..... 449

### Section 2 Category C Crops

1941 General Information ..... 450
1942 Almonds ..... 450
1943 Apples ..... 450
1944 Avocados, Florida ..... 453
1945 Blueberries ..... 453
1946 Citrus ..... 454
1947 Cranberries ..... 455
1948 Figs ..... 456
1949 Grapes ..... 456
1950 Table Grapes ..... 456
1951 Macadamia Nuts ..... 457
1952 Peaches ..... 457
1953 Pears ..... 458
1954 Prunes ..... 458
1955 Stonefruit ..... 459
1956 Walnuts ..... 460
1957-2000 (Reserved) ..... 460

## PART 20 CATEGORY D CROPS

### Section 1 Insurability

2001 General Information ..... 461
2002 Production Reports ..... 461

## TABLE OF CONTENTS

**PART 20 CATEGORY D CROPS (Continued)**


**Section 1 Insurability (Continued)**
2003 OU for Raisins ..... 461
2004-2006 (Reserved) ..... 461

**Section 2 Dollar Plans of Insurance**
2007 PAW ..... 462
2008 Block Map ..... 466
2009 PAIR Information ..... 466
2010 Macadamia Orchard PAIR and Plat Map ..... 477
2011-2020 (Reserved) ..... 479

**Section 3 RO Determined Yield Request**
2021 Florida Citrus RO Determined Yield Request ..... 480
2022-2024 (Reserved) ..... 480

**Section 4 Dollar Plans of Insurance Age or Leaf Year Determinations**
2025 General Information ..... 481
2026-2030 (Reserved) ..... 482

**Section 5 Dollar Plans of Insurance Acreage Information**
2031 General Information ..... 483
2032 Excluded Acreage ..... 485
2033 Florida Citrus Fruit Liability Adjustment Determination ..... 486
2034 Macadamia Trees Liability Adjustment Determination ..... 487
2035-2040 (Reserved) ..... 487

**Section 6 Dollar Plans of Insurance Additional Records and Provisions**
2041 General Information ..... 488
2042 (Reserved) ..... 488

**Section 7 Yield Based Dollar Amount of Insurance Plans**
2043 General Information ..... 489
2044 Different Coverage Levels ..... 489
2045 Units ..... 489
2046 County Yields for Hybrid Seeds ..... 489
2047 Amount of Insurance ..... 489
2048 Minimum Contract Payment ..... 490
2049 Yield Based Factor for Seed Companies ..... 490
2050 Approved Yields ..... 490
2051 Value per Bushel ..... 492
2052-2100 (Reserved) ..... 492

## TABLE OF CONTENTS

**PART 21 PECAN REVENUE**


**Section 1 General Requirements**

2101 Background ..... 493
2102 Insurability Requirements ..... 493
2103 Two-Year Coverage Module ..... 494
2104 Unit Division ..... 494
2105 Premium ..... 495
2106 Transfers ..... 495
2107 CAT Coverage ..... 495
2108-2116(Reserved) ..... 495

**Section 2 Acreage Reporting**

2117 Acreage Reports ..... 496
2118 Acreage ..... 498
2119 Changes to the Amount of Insurance ..... 498
2120-2130 (Reserved) ..... 500

**Section 3 Revenue Reporting**

2131 Revenue Reports ..... 501
2132 Revenue Report Required Elements ..... 503
2133 Production Evidence ..... 504
2134 Excessive Actual Yield ..... 505
2135-2140 (Reserved) ..... 505

**Section 4 Summary of Revenue History**

2141 Summary of Revenue History (SRH) Database ..... 506
2142 Summary of Revenue History Required Elements ..... 509
2143-2144 (Reserved) ..... 509

**Section 5 PAW/PAIR**

2145 PAW ..... 510
2146 PAW Required Elements ..... 510
2147 AIP PAW Review ..... 512
2148 PAW Triggers a PAIR ..... 513
2149 PAIR ..... 513
2150 PAIR Requirements ..... 513
2151 PAIR Waivers ..... 514
2152 PAIR Deadline ..... 514
2153 PAIR Completion Requirements ..... 515
2154 PAIR Required Elements ..... 515
2155-2166 (Reserved) ..... 521

## TABLE OF CONTENTS

**PART 21 PECAN REVENUE (Continued)**

**Section 6 RO Underwriting**
2167 RO Determined Yield Request ..... 522
2168-2200 (Reserved) ..... 522

**PART 22 RO UNDERWRITING**

**Section 1 Transmitting RO Determined Yield, and MY Request**
2201 ROE Requirement ..... 523
2202 AIP Alert Mechanisms ..... 524
2203 Separate Submission for WA ..... 524
2204-2210 (Reserved) ..... 524

**Section 2 Determined Yields, MY and UG**
2211 Category B Crops ..... 525
2212 Category C Crops ..... 527
2213 Category D Crops ..... 529
2214 Pecan Revenue ..... 530
2215-3000 (Reserved) ..... 531

**EXHIBITS 1-8**

Reserved ..... 533
Reserved ..... 535
Reserved ..... 537
Reserved ..... 539
Reserved ..... 541
Reserved ..... 543
Reserved ..... 545
Reserved ..... 547

**EXHIBIT 9 ENDORSEMENTS AND OPTIONS**

A. Endorsements and Options Chart ..... 549
B. Wheat or Barley and Dry Pea Winter Coverage Endorsement Flow Chart ..... 557
C. SCO Endorsement Calculation Examples ..... 558

**EXHIBIT 10 UNITS**

A. Examples of Unit Numbering when Units Change ..... 563
B. Combining Units and APH Databases ..... 564
C. Dividing Units Examples ..... 570
D. Additional Bean Procedure for Units and Yields by Types ..... 573

## TABLE OF CONTENTS

### EXHIBIT 10 UNITS (Continued)


E. Flowchart for Determining Unit Structure when Insured Does Not Qualify for Enterprise Units by Irrigated and Non-Irrigated Practices ..... 575
F. Flowchart for Determining Unit Structure when Insured Does Not Qualify for Enterprise Unit on One Irrigation Practice ..... 576


### EXHIBIT 11 UNDERWRITING RULES FOR SPECIFIC PRACTICES


A. Summerfallow Database ..... 577
B. Skip-Row Planted Cotton and ELS Cotton Overview ..... 578
C. FSA Determination for 30/50 Planting Pattern ..... 578
D. Percent Planted Factor, Yield Conversion Factor, and PASS Skip-Row Code Applicable to Arkansas, Louisiana, Missouri, and All States East of those States ..... 579
E. Percent Planted Factor, Yield Conversion Factor, and PASS Skip-Row Code Applicable to New Mexico and the Following Counties in Texas: Baylor, Concho, Runnels, Schleicher, Shackleford, Sutton, Taylor, Throckmorton, Valverde, Wilbarger and All Counties West of Those Counties ..... 581
F. Percent Planted Factor, Yield Conversion Factor, and PASS Skip-Row Code Applicable to Kansas, Oklahoma, and All Counties in Texas for Which Table 2 Does Not Apply ..... 582
G. Determining Planted Acres Using FSA Percent Planted Factor and Calculating Per Acre Yield Using Skip-Row Yield Conversion Factor ..... 584
H. Commingled Production from IRR Solid-Planted and NI Skip-Row Planted Cotton ..... 585


### EXHIBIT 12


Reserved ..... 589


### EXHIBIT 13 PRODUCTION REPORT


A. Soybeans Example of Completed Production Report for Production Reporting Requirements . 591
B. Corn Example of Completed Production Report for Production Reporting Requirements ..... 592


### EXHIBIT 14


Reserved ..... 593


### EXHIBIT 15 APH DATABASE


A. Examples of Completed APH Databases-New Insured ..... 595
B. Examples of Completed APH Databases-New Producer ..... 596
C. Examples of Completed APH Databases –Carryover Insured ..... 597
D. Examples of Completed APH Databases-Zero-Acreage Reported ..... 598
E. Examples of Completed APH Databases-Assigned Yield ..... 599
F. Examples of Completed APH Databases-Certified Organic ..... 600

## TABLE OF CONTENTS

### EXHIBIT 15 APH DATABASE (Continued)


G. Examples of Completed APH Databases-Category C Crops ..... 601
H. Yield Determinations-Converting an Existing Practice to a New Practice ..... 602
I. Yield Determinations—Combining Two Practices into a New Practice ..... 603
J Yield Determinations-Dividing a Practice into Two Practices Using Apportionment ..... 604
K. Yield Determinations-Dividing a Practice into Two Practices Using Attribution ..... 606
L. Yield Determinations-Dividing a Practice into Two Practices Using Recertification ..... 607
M. Yield Determinations-Dividing APH Databases by Recertification ..... 608
N. Yield Determinations-Dividing APH Databases by Apportioning Commingled Production ..... 612
O. Yield Determinations-Dividing APH Databases by Attributing Acres and Production ..... 617
P. Yield Determinations-Dividing APH Databases Using All 3 Methods ..... 618
Q. Yield Determinations-Dividing an Added Land APH Database ..... 620
R. Dividing an APH Database when a Type is Divided into More than Two Types ..... 623
S. Dividing an APH Database When Only One Type has been Produced ..... 629
T. Retaining 10 Crop Years of APH History ..... 630
U. Dividing Previously Established APH Databases for P/Ts with the Same T-Yield ..... 631
V. Yield Indicators ..... 633
W. Yield Descriptors ..... 635
X. APH Yield Floors, Cups, and Substitutions- Carryover Insured with Actual Yields ..... 640
Y. APH Yield Floors, Cups, and Substitutions- No Production Records Initially ..... 643
Z. APH Yield Floor, Cups, and Substitutions- Assigned Yield ..... 644
AA. Carryover Insured Provided a Production Report Applicable for the 2019 Crop Year ..... 644
BB. Yield Adjustment Examples ..... 645
CC. Yield Exclusion Examples ..... 646
DD. Cups Example ..... 654
EE. Yield Reductions- Excessive Actual Yield (Without Verifiable Records) ..... 655
FF. Inconsistent Approved APH Yield and Insured Acreage Limitation ..... 656
GG. Reserved ..... 658
HH. UUF or a Third Party ..... 661


### EXHIBIT 16


Reserved ..... 665


### EXHIBIT 17 CATEGORY B CROP PROCEDURES


A. Category B Crops- APH Databases Certified Organic or Transitional Acreage Affected by Prohibited Substances, Converted Back to Conventional Farming Practices and Suspended Or Revoked Certification ..... 667
B. Category B Crops- Multi-Purpose Production and Yield Worksheet ..... 671
C. Category B Crops-Master Yields ..... 673
D. Category B Crops-Acreage Emerging from USDA Program, New Breaking, and Native Sod Examples ..... 677

## TABLE OF CONTENTS

### EXHIBIT 17 CATEGORY B CROP PROCEDURES (Continued)


E. Cup Applicability Chart ..... 692
F. Recording and Maintaining SA T-Yields ..... 693
G. Special APH Instructions for Contract Seed Beans and Contract Seed Peas ..... 695
H. Green Pea Example ..... 702
I. Potato Example ..... 704
J. Forage Production Underwriting Report ..... 705
K. Elements and Information Required for Forage Production Underwriting Report ..... 705
L. Forage Production Underwriting Report Example ..... 707
M. Applicable Native Sod Annual Crops ..... 708


### EXHIBIT 18 CATEGORY C CROP PROCEDURES


A. Apple Examples ..... 709
B. Peaches PAW Examples ..... 716
C. Shelling Percentage Chart for Clean Unshelled Almonds ..... 725
D. Weighted Average Age/Density Worksheet ..... 726
E. Tree/Vine/Bush Measurement ..... 728
F. Planting Patterns ..... 728
G. Hedgerow/Border Planting Pattern ..... 729
H. Hexagonal/Quincunx Planting Pattern ..... 730
I. Double Row Planting Pattern ..... 732
J. Interplanted Crop Planting Pattern ..... 733
K. Missing and Partial Tree Formulas ..... 735
L. Additional Information ..... 737
M. Database Administration for Fresh and Processing ..... 738
N. APH Databases for Transitional and Certified Organic- Prohibited Substances ..... 744
O. APH databases for Grafted Apple Acreage in the States of Idaho, Oregon, and Washington ..... 745


### EXHIBIT 19


Reserved ..... 749


### EXHIBIT 20 CATEGORY D CROP PROCEDURES


A. Hybrid Seed Corn or Sorghum Seed Notice of Loss ..... 751
B. Hybrid Seed Corn or Sorghum Seed Yield Request Required Information ..... 752
C. Hybrid Seed Corn or Sorghum Seed Approved Yield Process ..... 753
D. Florida Citrus Fruit Producer's Pre-Acceptance Worksheet ..... 754
E. Macadamia Orchard Inspection Report ..... 755
F. Florida Citrus, Dollar Plan of Insurance, Percent Stand Example ..... 756
G. Summary of Revenue History (SRH) ..... 758

## TABLE OF CONTENTS

**EXHIBIT 21**

Reserved ..... 761

**EXHIBIT 22 RO UNDERWRITING**

RO Determined Yield Type, Yield Limitation Flag and Rate Yield Chart ..... 763

**EXHIBIT 23 MISCELLANEOUS**

Production Report and APH Database Flowchart ..... 769

**TABLE OF CONTENTS**

# PART 1 GENERAL INFORMATION

## 1 General Information

### A. Purpose

FCIC is established by the Federal Crop Insurance Act, 7 U.S.C. 1501, to promote the national welfare by improving the economic stability of agriculture through a sound system of crop insurance and providing the means for the research and experience helpful in devising and establishing insurance. The RMA is the administering USDA agency on behalf of FCIC.

This handbook provides the official FCIC-issued underwriting standards for policies insured under the Common Crop Insurance Policy Basic Provisions, 7 CFR Part 457 including the Catastrophic Risk Protection Endorsement, 7 CFR Part 402, the Actual Production History Regulation 7 CFR Part 400 Subpart G, and the Area Risk Protection Insurance Regulations, 7 CFR Part 407.

This handbook does not cover pilot programs or private insurance products submitted under the authority of the Federal Crop Insurance Act, e.g., Section 508(h) or 523(d), unless the underwriting guide refers to the CIH for applicability.

### B. Source of Authority

Federal programs enacted by Congress and the regulations and policies developed by RMA, USDA, and other Federal agencies provide the authority for program and administrative operations; and basis for RMA directives. Administration of the Federal crop insurance program is authorized by the following.

(1) The Federal Crop Insurance Act, 7 U.S.C. 1501
(2) The Food Security Act of 1985, 16 U.S.C. 3801 et seq.
(3) Controlled Substance Act of 1970, 21 U.S.C. 801 et seq.
(4) Personal Responsibility and Work Opportunity Reconciliation Act of 1996, 42 U.S.C. 653a
(5) Privacy Act of 1974, 7 U.S.C. 552a
(6) 7 CFR part 400
(7) Standard Reinsurance Agreement
(8) 7 CFR part 12

### C. Related Handbooks

The following table provides handbooks closely related to this handbook. However, other RMA approved handbooks may refer to this handbook and be applicable.

| HANDBOOK | RELATION/PURPOSE |
|---|---|
| CSH | Regional office standards and instructions for determining and assigning coverage and rate classifications. |

## C. Related Handbooks (continued)

| HANDBOOK | RELATION/PURPOSE |
|---|---|
| WAH | Provides standards and instructions for handling of actuarial change requests and written agreements. |
| DSSH | Provides form standards and procedures for use in the sales and service of crop insurance contracts. Provides submission and review procedures for non-reinsured supplemental policies.<br><br>AIP forms must meet the form standards as provided in the DSSH. The DSSH provides the substantive elements for AIP form development; including conflict of interest, nondisclosure, and Privacy Act statements whereas, the CIH provides the instructions for form completion. |
| ITS | Provides instructions for administration of the ineligible tracking system. |
| NUG | Provides instructions for administration of the nursery crop provisions. |
| LAM | Identifies loss adjustment standards and requirements for determining production or revenue and adjusting crop insurance claims. |
| GSH | Provides the general administrative procedures that apply across all plans of insurance. |
| Appendix III | Standards, instructions, and information for electronic data reporting of policyholder, commodity, and other information submitted by AIPs as required by the SRA, LPRA, or other policy and procedure. |
| STAX | Procedures for administering STAX (cotton only). |

## D. Regulatory or Procedural Conflict

If there is a conflict between this handbook and the following, the following take precedence.

(1) Federal Crop Insurance Act and any FAD interpreting the Act
(2) The CAT Endorsement, as applicable, and any FAD interpreting the CAT Endorsement
(3) Written Agreement, as applicable
(4) The Special Provisions and actuarial documents
(5) Crop endorsements/options and any FAD interpreting the crop endorsement/option if published at 7 CFR part 457
(6) Crop Provisions and any FAD interpreting the Crop Provisions
(7) Basic Provisions and any FAD interpreting the Basic Provisions
(8) Administrative regulations (7 CFR part 400) and any FAD interpreting the administrative regulations
(9) Manager's Bulletins and PM Informational Memorandums
(10) Plan specific directives such as the Crop Insurance Handbook/WFRP Pilot Handbook/STAX Underwriting Standards Handbook/Rainfall and Vegetative Index Insurance Standards Handbook, as applicable to the policy's plan of insurance
(11) General Standards Handbook
(12) PP Handbook
(13) Crop LASH Handbooks

**D. Regulatory or Procedural Conflict (Continued)**

(14) Loss Adjustment Manual

**E. Procedural Issuance Authority**

This handbook is written and maintained by:

Office of Deputy Administrator for Product Management
Product Administration and Standards Division
USDA—Risk Management Agency
Beacon Facility—Mail Stop 0812
P.O. Box 419205
Kansas City, MO 64141-6205

For applicable RMA Regional or Compliance office contacts referenced throughout this handbook, refer to www.rma.usda.gov/aboutrma/contact.html.

**F. Procedural Questions**

(1) Questions regarding underwriting procedures in this handbook are to be directed:

(a) to the AIP, if not resolved, then
(b) through appropriate channels within the AIP to RMA.

RMA will not attempt to instruct agents or insureds of the AIP.

(2) If a perceived error is identified, notify RMA in writing at the address contained in the preceding paragraph or by e-mail at rma.kc.cih@rma.usda.gov.

The writing must clearly identify the error and provide the proposed correction.

If RMA determines the error identified is significant, RMA will issue a correction either in the existing crop year through a slip-sheet to the CIH or a memorandum/bulletin. Conversely, if RMA determines the error identified as not to be significant, correction will be included in the subsequent issuance of the CIH.

## 2 Responsibilities

AIPs must use standards, procedures, methods and instructions as authorized by FCIC in the sale and service of crop insurance contracts. Each AIP is responsible for using RMA approved procedures. Procedures herein must be administered on a policy basis.

## 3 Title VI of the Civil Rights Act of 1964

The USDA prohibits discrimination against its customers. Title VI of the Civil Rights Act of 1964 provides that "No person in the United States shall, on the ground of race, color, or national origin, be excluded from participation in, be denied the benefits of, or be subjected to discrimination under any program or activity receiving Federal financial assistance". Therefore, programs and activities that receive Federal financial assistance must operate in a non-discriminatory manner. Also, a recipient of RMA funding may not retaliate against any person because he or she opposed an unlawful practice or policy, or made charges, testified or participated in a complaint under Title VI.

It is the AIP's responsibility to ensure that standards, procedures, methods and instructions, as authorized by FCIC in the sale and service of crop insurance contracts, are implemented in a manner compliant with Title VI. Information regarding Title VI of the Civil Rights Act of 1964 and the program discrimination complaint process is available on the RMA public website at http://www.rma.usda.gov/aboutrma/civilrights/complaint.html.

## 4-200 (Reserved)

# PART 2

**201-300 (Reserved)**

**201-300 (Reserved)**

# PART 3

**301-400 (Reserved)**

**301-400 (Reserved)**

# PART 4

**401-500 (Reserved)**

**401-500 (Reserved)**

# PART 5

**501-600 (Reserved)**

**501-600 (Reserved)**

# PART 6

**601-700 (Reserved)**

**601-700 (Reserved)**

# PART 7

**701-800 (Reserved)**

**701-800 (Reserved)**

# PART 8

**801-900 (Reserved)**

**801-900 (Reserved)**

# PART 9 ENDORSEMENTS AND OPTIONS

## 901 General Information

Endorsements and options that add supplemental coverage, exclude coverage, or otherwise modify coverage are available for some CP. Endorsements and options:

(1) generally must be applied for on or before the SCD;

(2) generally are continuous and do not automatically transfer when a cancellation or transfer to another AIP is executed by the insured;

(3) generally only apply to additional coverage policies; and

(4) must be specified on the applicable form to be in effect for the current crop year.

This part provides information about certain endorsements and options, yield options (such as YA, YE and YC) are discussed in Parts 15, and 17-18. Other endorsements and options may be available. See Exh. 9 for a listing of endorsements and options, continuous or yearly elections, applicability to CAT or additional coverage, etc. The actuarial documents provide endorsements and options that may be selected by the insured.

## 902 Catastrophic Risk Protection Endorsement

The Catastrophic Risk Protection Endorsement attaches to each CP and modifies its terms and conditions when Catastrophic Risk Protection coverage is elected. The endorsement:

(1) limits the coverage level and price election;
(2) restricts or changes the unit structure to BUs, by share;
(3) removes replant payment provisions;
(4) does not allow the exclusion of hail and fire coverage;
(5) removes the availability of WA; and
(6) excludes:

   (a) MY
   (b) Yield Floors
   (c) Cups
   (d) options or endorsements, except those expressly authorized by the Federal Crop Insurance Act. Options and Endorsements that do apply to CAT, include:

      (i) YA;
      (ii) YE;
      (iii) Frost Protection Option;
      (iv) Table Grape Protective Cover Option;
      (v) Sorghum Silage Endorsement;
      (vi) Contract Price Addendum, where applicable; and
      (vii) SCO Endorsement.

## 903 High-Risk Land Exclusion Option

### A. Excluding High-Risk Land from Additional Coverage

A high-risk classification is provided in the actuarial document for high-risk land. Under an additional coverage policy, producers are required to insure the high-risk land at an increased cost reflective of the associated increase in risk when coverage and rates are provided in the actuarial documents for high-risk land.

Insureds who do not wish to insure high-risk land under an additional coverage policy may exclude all the high-risk land from the additional coverage by signing and submitting a High-Risk Land Exclusion Option to the AIP.

The High-Risk Land Exclusion Option is:

(1) by crop and county; and
(2) available for land located in high-risk areas identified in the actuarial documents.

Excluding acreage from coverage may impact eligibility for FSA programs that require crop insurance coverage. Prior to excluding acreage under this option, insureds are responsible for contacting the FSA office for guidance relating to any FSA program that may require crop insurance coverage.

### B. CAT Coverage for Excluded High-Risk Land

Insureds that elect the High-Risk Land Exclusion Option may insure high-risk land under a CAT policy. The CAT policy must be obtained from the same AIP as the additional coverage policy. The CAT coverage for the excluded high-risk land will be for yield protection only, even if revenue coverage is elected for the non-high-risk land under the additional coverage policy.

The CAT policy is considered a separate crop for administrative fee, unit division, added land, and all other insurance purposes.

**Exception:** The number of years of actual/assigned yields for yield floor and percent of variable T-Yields will be determined by crop/county for both the CAT and additional policy.

### C. Application, Cancellation, and Transfers

The High-Risk Land Exclusion Option must be elected on or before the applicable SCD, by crop and county and is continuous.

Cancellation of the High-Risk Land Exclusion Option must occur on or before the cancellation date of the applicable CP.

If the policy is transferred to a different AIP, a new High-Risk Land Exclusion Option must be signed by the insured and submitted to the AIP on or before the applicable SCD.

### D. Reporting Acreage and Production

When excluded high-risk land is insured under a CAT policy, the production from such land must be reported for APH purposes under the CAT policy.

Excluded high-risk land not insured under a CAT policy must be reported as uninsured acreage on the acreage report. Separate production records showing planted acreage and harvested production from the excluded high-risk land must also be maintained and reported by the insured on the production report.

### E. Requests for Reclassification

An insured must have an additional coverage policy in force before requesting a reclassification of high-risk land. Requests for reclassification must be made through a WA.

The following table provides procedures for when an insured signs the High-Risk Land Exclusion Option and requests reclassification of the high-risk land through a WA.

| IF the excluded high-risk land is … | AND the RO issues a WA that … | THEN the … |
|---|---|---|
| not insured under a CAT policy | does not provide standard rating | High-Risk Land Exclusion Option prevails and the insured must report the acreage as uninsurable. |
| | reclassifies the high-risk land to standard rating | (1) WA is effective on issuance and deemed to be accepted by the insured and AIP; and<br>(2) Insured must report the acreage as insurable under the additional coverage policy. |
| insured under a CAT policy | does not provide standard rating | High-Risk Land Exclusion Option prevails and the insured must report the acreage on the CAT policy. |
| | reclassifies such acreage to standard rating | (1) WA is effective on issuance and deemed to be accepted by the insured and AIP; and<br>(2) Insured must report the acreage as insurable under the additional coverage policy. |

## 904 Hail and Fire Exclusion Option

### A. Eligibility

Hail and fire may be excluded only from policies with coverage of at least 65 percent coverage indemnified at 100 percent price election, or equivalent coverage. The exclusion may be elected on an annual or continuous basis. The Hail and Fire Exclusion Option applies to all acreage of the crop insured at an equivalent to a minimum 65 percent coverage indemnified at 100 percent price election. The Hail and Fire Exclusion Option does not apply to WUs unless allowed by the SP.

Due to an insured's ability to select different price election or different coverage level percentages for different types of the same crop, such as dry beans, dry peas or grapes, a single crop policy may have some types with sufficient coverage to exclude hail and fire and some types with less than the minimum coverage required. When this occurs, hail and fire is excluded only from acreage that meets the minimum coverage requirement.

Insured's executing a Hail and Fire Exclusion Option must provide a copy of the annual hail and fire declaration page showing the required amount of hail and fire coverage each year.

### B. Deadlines

The request to exclude hail and fire coverage must be submitted to the AIP within 72 hours:

(1) after the effective date of an annual hail and fire policy or the first year a multi-season hail and fire policy is in force. This request must be made on or before the date coverage attaches for the crop year when a multi-season hail and fire policy (except the first year) is in effect.

(2) after the date a private hail policy is first in effect for the insured that has signed the Continuous Hail and Fire Exclusion Option, or before the date coverage attaches for a crop year after the first crop year a multi-season hail and fire policy is in effect.

### C. Non-acceptance of Hail and Fire Exclusion Option

A request for hail and fire exclusion will not be accepted if the crop has been damaged to the extent that a loss has occurred and an indemnity is to be, or may be, claimed on any unit of the crop. For a continuous hail and fire exclusion, the exclusion will not be effective until the following year. Issuance of a PP or replant payment for any insured unit will not affect an insured's ability to exclude hail and fire coverage.

### D. Hail and Fire Liability Requirements

The total liability for the hail and fire coverage on the crop must be equal to or greater than the FCIC reinsured total liability for the crop for each crop year the Hail and Fire Exclusion Option is in effect. Liability for acreage which is eligible for PP but was not planted is not considered and the premium is not reduced on such acreage.

(1) The AIP must ascertain/verify that for the crop year of the claim, the amount of liability under the hail and fire policy equals or exceeds the liability amount that would have been provided by the CCIP policy for that crop year. Liability for acreage that is eligible for prevented planting but was not planted is NOT considered and the premium is not reduced on such acreage.

(2) To determine if the minimum required hail and fire liability is in place for a revenue protection plan of insurance policy, or revenue protection with the harvest price exclusion plan of insurance policy, the amount of liability (for this purpose only) will be computed based upon the projected price.

(3) When ascertaining whether there is adequate liability, uninsurable acreage must be considered. If uninsurable acreage is involved, the total liability under the hail and fire policy may exceed the CCIP crop insurance liability due to the extra acreage (uninsured acreage), yet the insured still MAY NOT have adequate hail and fire liability to allow exclusion of hail and fire coverage from the CCIP policy.

**Example:** Based on the above, the insured's hail and fire liability of $50 per acre does not equal or exceed the $100 per acre liability that would have been provided by the CCIP policy; therefore, the insured does not have adequate liability to exclude hail and fire from CCIP coverage.

### E. Hail and Fire Providers

Hail and fire policies must be obtained from a company licensed in the state where the coverage is provided in order to exclude hail and fire from the additional coverage policy. If hail and fire coverage is provided by unlicensed entities/companies, the exclusion of hail and fire from the additional coverage policy must be approved by the RMA Reinsurance Services Division.

The insured may be eligible for the premium credit under the Hail and Fire Exclusion Option only if coverage for both hail and fire is provided under the other policy obtained by the insured.

### F. Premium Reduction

The premium reduction for the Hail and Fire Exclusion Option is provided in the actuarial documents. The base premium rate for acreage with additional coverage shall be reduced for the hail/fire exclusion provided in the actuarial documents. See Appendix III for calculation of premium.

### G. Liability Revisions

An insured may revise the liability on the Hail and Fire Exclusion Option to reflect the liability for the reported acreage on the insured crop, provided the:

(1) Hail and Fire Exclusion Option showing the revised liability is submitted no later than 15 days after the liability, based on the reported acreage, is established; and

(2) difference between the total acreage report liability and the total liability shown on the original Hail and Fire Exclusion Option is more than one percent.

An insured will be considered to have a like amount of private hail and fire liability if the difference in liability described above is less than one percent.

### H. Hail or Fire Damage

If hail and fire coverage is deleted from the additional coverage policy and the crop is subsequently damaged by hail or fire, an appraisal for uninsured causes of loss will be made only if the damage due to hail or fire exceeds the deductible established in the policy.

## 905 Apple Fresh Fruit Quality Adjustment Option

### A. Applicability

The Apple Fresh Fruit Quality Adjustment Option:

(1) applies only to additional coverage policies; and

(2) applies to all apple acreage designated on the acreage report as grown for fresh apple production, unless the acreage is specifically excluded by the actuarial documents.

### B. Application, Cancellation, and Transfers

The Apple Fresh Fruit Quality Adjustment Option must be elected on or before the SCD and is continuous.

Cancellation of the Apple Quality Adjustment Option must occur on or before the cancellation date of the applicable CP.

If the policy is transferred to a different AIP, a new option must be signed by the insured and submitted to the AIP on or before the applicable SCD.

## 906 Wheat or Barley Winter Coverage Endorsement

### A. Availability and Applicability

The Wheat or Barley WCE is available only in counties where the actuarial documents designate both a fall final planting date and a spring final planting date and the actuarial documents provide a premium rate for this coverage. The endorsement applies only to additional coverage policies. When elected, the WCE attaches to the Small Grains CP and provides coverage for fall seeded barley or wheat between the fall final planting date and the spring final planting date.

### B. Indemnity Payments

Any indemnity paid under the Wheat or Barley WCE will be subject to any reduction in the BP for multiple crop benefits in the same crop year.

### C. Application, Cancellation, and Transfers

The Wheat or Barley WCE must be elected on or before the fall SCD and is continuous.

Cancellation of the Wheat or Barley WCE must occur on or before the cancellation date of the applicable CP. Once the cancellation date has passed, the endorsement cannot be canceled or otherwise rendered ineffective by either the AIP or the insured for that crop year. If the policy is transferred to a different AIP, a new Wheat or Barley WCE must be signed by the insured and submitted to the AIP on or before the applicable SCD.

### D. Coverage

Coverage begins the later of the date the application is accepted or the fall final planting date. Coverage ends on the spring final planting date in the SP.

### E. Notice of Damage

Insureds must provide all notices of damages according to the policy but not later than the spring FPD provided in the SP.

### F. Options when Winter Wheat or Winter Barley is Damaged

When any winter wheat or winter barley is damaged during the insurance period and at least 20 acres or 20 percent of the insured planted acreage in the unit, whichever is less, does not have an adequate stand to produce at least 90 percent of the production guarantee for the acreage, the insured may:

(1) continue to care for the damaged crop, and coverage will continue under the terms of the BP, CP, and the Wheat or Barley WCE;

(2) replant the acreage to an appropriate variety of the insured crop, provided it is practical to replant the acreage, and:

**F. Options when Winter Wheat or Winter Barley is Damaged (Continued)**

(a) receive a replanting payment according to the terms of the CP; and
(b) coverage will continue under the terms of the BP, CP and the endorsement; or

(3) destroy the remaining crop on such acreage, and an appraisal must be made to determine the amount of production to count for indemnity purposes under the CP.

When an insured elects to destroy the remaining crop, an appraisal of the crop's potential production is required prior to the destruction. Only the lower of the actual appraisal or the approved APH yield will be used for APH purposes. The insured may utilize the acreage for any purpose including planting and separately insuring of spring barley, spring wheat, or any other crop.

**G. Replanting Winter Wheat or Winter Barley Acreage**

Winter wheat or winter barley for which a replant payment was made for planting to spring wheat or spring barley shall retain the winter wheat or winter barley approved APH yield and premium rate, provided it was not practical to replant a winter type of the insured crop. The acres and production are used for the winter wheat or winter barley APH.

Any winter wheat or winter barley acreage that is replanted to a spring type of the same crop when it was practical to replant the winter type will be insured as the spring type and the production guarantee, premium and price election applicable to the spring type will be used. The production and this acreage will be reported only on the spring type APH.

## 907 Dry Pea WCO

**A. Availability and Applicability**

The Dry Pea WCO provides coverage for fall seeded dry peas, lentils and Austrian peas, (hereafter referred to as winter pea types,) between the fall final planting date and the spring final planting date. This option is available only in counties where the SP designate both a fall final planting date and a spring final planting date and the actuarial documents provide a premium rate for the option. The Dry Pea WCO applies only to additional coverage policies.

When elected, the Dry Pea WCO attaches to the Dry Pea CP.

See Para. 1907C for APH instructions relating to WCOs.

**B. Application, Cancellation, and Transfers**

The Dry Pea WCO must be elected on or before the SCD and is continuous.

Cancellation of the Dry Pea WCO must occur on or before the cancellation date of the CP. Once the cancellation date has passed, the endorsement cannot be canceled or otherwise rendered ineffective by either AIP or insured for that crop year.

**B. Application, Cancellation, and Transfers (Continued)**

If the policy is transferred to a different AIP, a new Dry Pea WCO must be signed by the insured and submitted to the AIP on or before the applicable SCD.

**C. Indemnity Payments**

Any indemnity paid under the Dry Pea WCO will be subject to any reduction contained in the BP for multiple crop benefits in the same crop year.

**D. Coverage**

Coverage begins the later of the date the application is accepted or the fall final planting date. Coverage ends on the spring final planting date shown in the SP.

**E. Notice of Damage**

Insureds must provide all notices of damages according the policy but not later than 15 days after the spring final planting date shown in the SP.

**F. Options When Winter Dry Peas are Damaged**

When any acreage of dry peas planted in the fall is damaged during the insurance period and at least 20 acres or 20 percent of the insured planted acreage in the unit, whichever is less, does not have an adequate stand to produce at least 90 percent of the production guarantee for the acreage, the insured may:

(1) continue to care for the damaged crop, and coverage will continue under the terms of the BP, CP, and the Dry Pea WCO;

(2) replant the acreage to an appropriate type of the insured dry peas, provided it is practical to replant the acreage, and:

  (a) receive a replanting payment according to the terms of the CP;
  (b) coverage will continue under the terms of the BP, CP and the option; and
  (c) the production guarantee for the fall planted dry pea will remain in effect; or

(3) destroy the remaining crop on such acreage, and an appraisal must be made to determine the amount of production to count for indemnity purposes under the CP.

When an insured elects to destroy the remaining crop, an appraisal of potential production is required prior to the destruction. Only the lower of the actual appraisal or the approved APH yield will be used for APH purposes. The insured may utilize the acreage for any purpose including planting and separately insuring any other crop, if insurance is available.

### G. Replanting Winter Dry Pea Acreage

Winter Dry Pea acreage for which a replant payment was made for planting to a spring pea type shall retain the winter pea type approved APH yield and premium rate provided it was not practical to replant a winter pea type of the insured crop. The acres and production are used for the winter pea type APH.

Any winter pea acreage that is replanted to a spring pea type when it was practical to replant the winter pea type will be insured as the spring pea type and the production guarantee, premium and price election applicable to the spring pea type will be used. The production and this acreage will be reported only on the spring pea type APH.

## 908 Fresh Market Sweet Corn Minimum Value Option

### A. Applicability

The Fresh Market Sweet Corn Minimum Value Option provides, for claim purposes, a minimum value per container, as provided in the SP, which will be applied to any harvested production that is valued at less than the minimum value after subtracting the allowable cost. The Fresh Market Sweet Corn Minimum Value Option applies only to additional coverage policies.

Appraised production is valued at the minimum value price, while the harvested production will be valued at no less than the minimum value amount under the option, as applicable.

### B. Application, Cancellation, and Transfers

The Fresh Market Sweet Corn Minimum Value Option must be elected on or before the SCD and is continuous.

Cancellation of the Fresh Market Sweet Corn Minimum Value Option must occur on or before the cancellation date of the CP.

If the policy is transferred to a different AIP, a new Fresh Market Sweet Corn Minimum Value Option must be signed by the insured and submitted to the AIP on or before the applicable SCD.

### C. Value of Harvested Production Not Sold by Direct Marketing

The total value of harvested production that is not sold by direct marketing is determined by summing the result of:

(1) multiplying the total number of all containers of sweet corn sold times the greater of:

(a) the average net value per container from all sweet corn sold; or
(b) minimum value option amount if such amount is provided in the SP; and

**C. Value of Harvested Production Not Sold by Direct Marketing (Continued)**

(2) multiplying the total number of containers of marketable sweet corn not sold by the minimum value in the SP for the planting period.

Harvested production that is damaged or defective due to insurable causes and is not marketable will not be included as production.

**D. Value of Harvested Production Sold by Direct Marketing**

If all the requirements of insurability are met, the value of insurable production that is sold by direct marketing will be the greater of the:

(1) actual value received by the insured for direct marketed production; or

(2) dollar amount obtained by multiplying the total number of containers of sweet corn sold by direct marketing by the minimum value.

## 909 Fresh Market Pepper Minimum Value Option

**A. Applicability**

The Fresh Market Pepper Minimum Value Option provides insureds two options, Option I or Option II, for determining the total value of harvested production for fresh market peppers. The Fresh Market Pepper Minimum Value Option applies only to additional coverage policies.

**B. Application, Cancellation, and Transfers**

The Fresh Market Pepper Minimum Value Option must be elected on or before the SCD and is continuous.

Cancellation of the Fresh Market Pepper Minimum Value Option must occur on or before the cancellation date of the CP.

If the policy is transferred to a different AIP, a new Fresh Market Pepper Minimum Value Option must be signed by the insured and submitted to AIP on or before the SCD.

**C. Value of Harvested Production Under Option I**

The total value of harvested production will be the sum of value of harvested production sold plus the value of the marketable production that is not sold.

**C. Value of Harvested Production Under Option I (Continued)**

The value for harvested production sold will be the dollar amount obtained from multiplying the number of boxes of peppers sold times the result of subtracting the allowable cost contained in the SP from the price received for each box of peppers. However, the result of subtracting the allowable cost contained in the SP from the price received for each box of peppers may not be less than the minimum value option price contained in SP for any box of peppers.

The value for marketable production not sold will be the dollar amount obtained by multiplying the number of boxes of such peppers on the unit by the minimum value shown on the SP for the planting period. Harvested production that is damaged or defective due to insurable causes and is not marketable will not be counted as production.

**D. Value of Harvested Production Under Option II**

The total value of harvested production will be determined the same as under Option I.

## 910 Fresh Market Tomato (Dollar Plan) Minimum Value Option

**A. Applicability**

The Fresh Market Tomato (Dollar Plan) Value Minimum Option permits insureds to select the Minimum Value Option for fresh market tomatoes. The Fresh Market Tomato (Dollar Plan) Minimum Value Option applies only to additional coverage policies.

**B. Application, Cancellation, and Transfers**

The Fresh Market Tomato (Dollar Plan) Minimum Value Option must be elected on or before the SCD and is continuous.

Cancellation of the Fresh Market Tomato (Dollar Plan) Minimum Value Option must occur on or before the cancellation date of the CP.

If the policy is transferred to a different AIP, a new Fresh Market Tomato (Dollar Plan) Minimum Value Option must be signed and submitted to AIP on or before the SCD.

**C. Value of Harvested Production**

The total value of harvested production will be the sum of value of harvested production sold plus the value of the unsold harvested production.

**C. Value of Harvested Production (Continued)**

The value for harvested production sold will be the dollar amount obtained from multiplying the number of cartons of fresh market tomatoes sold times the result of subtracting the allowable cost contained in the SP from the price received for each carton of fresh market tomatoes in the load. However, the result of subtracting the allowable cost contained in the SP from the price received for each carton of fresh market tomatoes sold may not be less than the minimum value option price contained in SP for any carton of tomatoes sold.

The value for unsold harvested production will be the dollar amount obtained by multiplying the number of cartons of such fresh market tomatoes on the unit by the minimum value shown on the SP for the planting period. Harvested production that is damaged or defective due to insurable causes and is not marketable will not be counted as production.

## 911 Mint Winter Coverage Option

**A. Applicability**

Mint WCO provides protection when any insured mint is damaged and does not meet the requirement of an adequate stand before the beginning of basic coverage. The Mint WCO applies only to additional coverage policies. When elected, all insurable acreage in the county will be insured under the Mint WCO.

**B. Production Guarantee**

The Mint WCO provides a guarantee equal to 60 percent of the production guarantee determined under the CP.

**C. Application, Cancellation, and Transfers**

The Mint WCO must be elected on or before the fall SCD and is continuous.

Cancellation of the Mint WCO must occur on or before the cancellation date of the CP.

If the policy is transferred to a different AIP, a new Mint WCO must be signed by the insured and submitted to AIP on or before the SCD.

**D. Insured Crop**

The crop insured under the Mint WCO will be all mint types in the county for which a premium rate is provided by the actuarial documents:

(1) in which the insured has a share;
(2) that are planted for harvest and distillation as mint oil;
(3) that have an adequate stand on the date coverage begins; and
(4) that has been:

**D. Insured Crop (Continued)**

(a) for the first crop year insured, inspected and accepted by the AIP not later than November 15;

(b) inspected and accepted by the AIP no later than November 15 for the crop year following the payment of an indemnity or a reported loss unless the AIP determined there was an adequate stand no later than November 15, in which case no inspection is required; or

(c) certified by the insured as having an adequate stand on the date coverage begins, unless an inspection is required according to the Mint WCO.

**E. Mint WCO Payment**

A Mint WCO payment may be made only on acreage that had an adequate stand on the date that insurance attached if the:

(1) adequate stand was lost due to an insured cause of loss occurring within the Mint WCO insurance period; and

(2) acreage consists of at least 20 acres or 20 percent of the insurable planted acres in the unit.

Acreage for which a Mint WCO payment has been made:

(1) is no longer insurable under the CP for the current crop year; and

(2) will receive an amount of production of zero when computing the subsequent year's approved APH yield.

## 912 Northern Potato Policy Endorsements

**A. Availability**

The following endorsements are applicable to the Northern Potato CP.

(1) Northern Potato Quality Endorsement.
(2) Northern Potato Processing Quality Endorsement.
(3) Certified Seed Endorsement.
(4) Northern Potato Storage Coverage Endorsement.

All of the Northern Potato endorsements apply only to additional coverage policies.

Where premium rates for the endorsements are established in the actuarial documents, an insured may select any or all of the endorsements available in the county.

**A. Availability (Continued)**

**Exceptions:** The Certified Seed Endorsement is for acreage intended for seed and may not to be used in combination with any of the other endorsements.

The Northern Potato Quality Endorsement must be in place before the Northern Potato Processing Quality Endorsement can be elected.

**B. Application, Cancellation, and Transfers**

The endorsement must be elected on or before the SCD and is continuous.

Cancellation of the endorsement must occur on or before the cancellation date of the CP. Cancelation of the Northern Potato Quality Endorsement will automatically result in cancellation of the Northern Potato Processing Quality Endorsement.

If the policy is transferred to a different AIP, a new endorsement must be signed by the insured and submitted to AIP on or before the SCD.

**C. Northern Potato Quality Endorsement**

The Northern Potato Quality Endorsement provides an adjustment to production to count for potatoes not meeting applicable grade requirements due to:

(1) internal defects, provided the number of potatoes with such defects are in excess of the tolerances allowed for U.S. No 2 grade potatoes on a lot basis and are not separable from undamaged production; or

(2) other factors according to the Northern Potato Quality Endorsement.

The actuarial documents may provide U.S. No. 1 grade in place of U.S. No. 2 grade, as used in the Northern Potato Quality Endorsement. If both U.S. No. 1 and U.S. No. 2 grades are available in the actuarial documents, the insured may elect U.S. No. 1 or 2 by potato type or group, if separate types or groups are specified on the SP.

If both fresh and processing types are specified in the actuarial documents, the insured cannot elect the fresh type for any potatoes grown for processing or chipping.

**D. Northern Potato Processing Quality Endorsement**

The Northern Potato Processing Quality Endorsement attaches to and is made part of the Northern Potato CP and the Northern Potato Quality Endorsement. Insureds must have a Northern Potato Quality Endorsement in place before the Northern Potato Processing Quality Endorsement can be elected. To qualify for a quality reduction under the Northern Potato Processing Quality Endorsement, potatoes must:

**D. Northern Potato Processing Quality Endorsement (Continued)**

(1) fail to meet the applicable U.S. No. 2 grade requirements due to internal defects as long as the number of potatoes with such defects are in excess of the tolerance allowed for U.S. No. 2 grade potatoes;

(2) have a specific gravity lower than 1.074;

(3) have a fry color of No. 3 or darker due to either sugar exceeding 10 percent or sugar ends exceeding 19 percent; or

(4) have an Agtron rating lower than 58.

The actuarial documents may provide U.S. No. 1 grade in place of U.S. No. 2 grade, as used under the Northern Potato Processing Quality Endorsement. If both U.S. No. 1 and U.S. No. 2 grades are available in the actuarial documents, the insured may elect U.S. No. 1 or 2 by potato type or group, if separate types or groups are specified on the SP.

When both fresh and processing types are specified in the actuarial documents, the fresh type cannot be elected for any potatoes grown for processing or chipping, unless as indicated in the processing endorsement for production not covered by contract such as a stated amount of production.

**E. Percentage Factors (PF)**

Marketing records or records determined at the time of harvest prior to potatoes being placed in storage must indicate the percentage of potatoes grading U.S. No. 2 or better, or as otherwise specified in the actuarial documents.

The PF, as provided on the Northern Potato Quality Endorsement, will be based on the actual average percentage (AAP) of potatoes grading U.S. No. 2 or better, or as otherwise specified on the actuarial documents, as determined from the insured's records if four or more years, not to exceed 10 years, of acceptable records are available. If less than four years of acceptable records are available, the percentage factor will be calculated as follows:

| YEAR'S ACTUAL PERCENTAGE RECORDS | AAP | *DP | PF |
|---|---|---|---|
| 0 | (0 AAP) | (4 DP) ÷ | 4 = PF |
| 1 | (1 AAP) | (3 DP) ÷ | 4 = PF |
| 2 | (2 AAP) | (2 DP) ÷ | 4 = PF |
| 3 | (3 AAP) | (1 DP) ÷ | 4 = PF |

*The DP is the grade percentages by group, fresh market or processing, type, and grade number(s), as applicable, from the actuarial documents.

**E. Percentage Factors (PF) (Continued)**

AAPs must be submitted and certified according to APH procedures. Failure to provide AAPs will result in the use of the default percentage (DP) for the endorsement. Use of loss records showing the percentage of potatoes meeting the grade designations stated above must be used as an actual year of records for any year in which the AIP determines the percentage of potatoes meeting the stated grades.

The following is an example of when AAPs are not provided for the most recent year.

| CROP YEAR: 2019 | | PRACTICE: IRR (002) | | | UNIT NO.: 0001-0000 | | |
|---|---|---|---|---|---|---|---|
| CROP: POTATOES (0084) | | TYPE: GROUP A (161) | | | OTHER QA | | |
| CROP YEAR | TOTAL PRODUCTION | ACRES | AVERAGE CWT | FRESH #1'S | FRESH # 2'S> | PROCESS #1'S | PROCESS #2'S> |
| 2009 | 42,800 | 128.6 | A333 | AAP-60 | AAP-76 | | |
| 2010 | 49,900 | 130.3 | A383 | AAP-73 | AAP-82 | | |
| 2011 | 30,800 | 128.6 | A240 | AAP-56 | AAP-68 | | |
| 2012 | 33,800 | 102.3 | A330 | AAP-63 | AAP-72 | | |
| 2013 | 51,200 | 130.3 | A393 | AAP-58 | AAP-67 | | |
| 2014 | 44,300 | 136.4 | A325 | AAP-62 | AAP-78 | | |
| 2015 | 42,400 | 128.6 | A330 | AAP-64 | AAP-72 | | |
| 2016 | 26,800 | 132.4 | A202 | AAP-53 | AAP-78 | | |
| 2017 | 42,100 | 130.4 | A323 | AAP-62 | AAP73 | | |
| 2018 | 55,500 | 135.8 | A409 | DP-60 | DP-75 | | |
| | | TOTAL T-YIELD | 3,268 | 611 | 741 | | |
| | | AVERAGE YIELD | 327.0 | | | | |
| | | APPROVED APH YIELD | 327.0 | | | | |
| | | | 327.0 | PF-61 | PF-74 | | |
| | | PRIOR YIELD | 319.0 | PF-60 | PF-73 | | |

**F. Certified Seed Endorsement**

Availability of the Certified Seed Endorsement is limited to counties with certified seed potato rates published in the actuarial documents. To qualify for the Certified Seed Endorsement an insured must provide acceptable records of their certified seed potato acreage and production for the previous three years.

The certified seed production guarantee per-acre will be the per-acre production guarantee used to cover the same acreage under the Northern Potato CP. All potatoes insured for certified seed production must be produced and managed according to the regulations, standards, practices, and procedures required for certification under the potato certified seed program. The determination of certified seed must be made by a certified seed inspector.

**F. Certified Seed Endorsement (Continued)**

Unless a WA provides otherwise, if the total amount of insurable certified seed acreage the insured has for the current crop year is greater than 125 percent of the insured's average number of acres entered into and passing certification in the potato certified seed program in the three previous calendar years, the certified seed production guarantee for each unit will be reduced. Determine the reduction according to the following table.

| Step | Action |
|---|---|
| 1 | Multiply the average number of the insured's acres entered into and passing certification in the potato certified seed program the 3 previous calendar years times 1.25. |
| 2 | Divide the result of step 1 by the number of acres grown by the insured for certified seed in the current crop year. If the result is greater than 1.0, enter 1.0 as the result. |
| 3 | Multiply the result of step 2 by the production guarantee for certified seed for the current crop year. |

**G. Northern Potato Storage Coverage Endorsement**

All potato production insured under the Northern Potato Crop Provisions must be insured under the Northern Potato Storage Coverage Endorsement unless the SP allow certain potato varieties, types, or groups to be excluded from the endorsement. Potato production grown under a contract that requires the production to be delivered to a buyer within three days of harvest will not be insured under the Northern Potato Storage Coverage Endorsement.

When such contract requires delivery of a stated amount of production, rather than all of the production from a stated amount of acres, the number of acres not insured under the endorsement will be determined by dividing the stated amount of production by the approved APH yield for the acreage.

The extended coverage provided by the Northern Potato Storage Coverage Endorsement is applicable only if insured potatoes are damaged within the insurance period by an insured cause of loss other than freeze that later results in:

(1) tuber rot to the extent that 5.1 percent, by weight, or more of the insured production is affected;

(2) certain internal defects, as provided in the Northern Potato Storage Coverage Endorsement, but only if the insured also elected the Northern Potato Quality Endorsement; or

(3) the potatoes failing to meet standards, as provided in the Northern Potato Storage Coverage Endorsement, but only if the insured also elected the Northern Potato Processing Quality Endorsement.

## 913 Fresh Pear Quality Adjustment Endorsement

### A. Applicability

The Fresh Pear Quality Adjustment Endorsement provides a quality adjustment provision for pears located in a state designated for pear insurance and for which a premium rate for the endorsement is provided.

### B. Application, Cancellation, and Transfers

The Fresh Pear Quality Adjustment Endorsement must be elected on or before the SCD, and is continuous.

Cancellation of the Fresh Pear Quality Adjustment Endorsement must occur on or before the cancellation date of the CP.

If the policy is transferred to a different AIP, a new Fresh Pear Quality Adjustment Endorsement must be signed by the insured and submitted to AIP on or before the SCD.

### C. Damaged Production

When the fresh pear production is damaged by an insured cause of loss, and if 11 percent or more of the harvested and appraised production does not grade at least U.S. No. 1 according to the applicable United States Standards for Grade of summer and fall, or U.S. Standards for Grades of winter pears, as applicable, the amount of production to count will be reduced as follows:

(1) 2 percent for each full 1 percent in excess of 10 percent, when 11 percent through 60 percent of the pears fail the grade standard.

(2) 100 percent when more than 60 percent of the pears fail the grade standard.

(3) If the insured sells more fresh pear production as U.S. Number 1 or better than the quantity of pears determined to grade U.S. Number 1 or better in the appraisal, the quantity of such sold production exceeding the amount determined to grade U.S. Number 1 or better in the appraisal will be included as production to count.

The Fresh Pear Quality Adjustment Endorsement applies only to additional coverage plans. Election of CAT coverage for any crop year after the endorsement is effective will be considered as notice of cancellation of the endorsement.

## 914 Table Grape Protective Cover Option

### A. Applicability

The Table Grape Protective Cover Option is applicable for late harvest table grapes in California if the option is available in the actuarial documents. Table grapes are considered late harvest if the end of insurance date is October 31, or later.

## 914 Table Grape Protective Cover Option (Continued)

### A. Applicability (Continued)

The Table Grape Protective Cover Option is considered a premium rate discount and is not an extension to the coverage available; therefore, the option is available for CAT coverage.

### B. Application, Cancellation, and Transfers

The Table Grape Protective Cover Option must be elected on or before the ARD and is continuous.

Cancellation of the Table Grape Protective Cover Option must occur on or before the cancellation date of the CP.

If the policy is transferred to a different AIP, a new Table Grape Protective Cover Option must be signed by the insured and submitted to AIP on or before the ARD.

### C. Coverage

The Table Grape Protective Cover Option applies to all acreage of the insured crop that is adequately protected by a plastic cover. Adequate protection means the placement of a plastic film cover over the grape vines starting at one end of the trellis and continuing uninterrupted to the other end, securely tied down.

The indemnity for the unit will be reduced by the percentage of premium reduction allowed for the option if protection was not properly utilized or not properly reported at any time.

The insured must, when requested, provide records showing the purchase of protection materials for acreage on which the protection was applied.

## 915 Contract Price Addendum (CPA)

### A. General Information

The CPA applies to insured crops grown under contract with a buyer, executed on or before the ARD, and in effect for the crop year. The contract must include: the insured's commitment to plant, grow, harvest, and deliver an insurable crop to the buyer; the buyer's commitment to purchase the production stated in the contract at the contract price; the specific crop, type, or variety, which also must be insurable under the policy; the amount of production or a statement that the buyer will accept all production from a specified number of acres; the contract price or a method to determine the contract price.

### B. Applicability

The CPA is available where the actuarial documents specify the availability of contract pricing and contract pricing is not available by the CP or SP. The CPA may be available by P/T and is identified by the "CP" option code. For more information regarding availability see http://www.rma.usda.gov/news/currentissues/organics/cpa_eligibility.html.

**B. Applicability (Continued)**

If the CPA is elected, a copy of the contract must be provided to the AIP by the ARD. Failure to provide the contract by the ARD will result in the price defaulting to the applicable projected price, harvest price, or price election for the insurance plan.

The contract price is applicable to all contracted acreage. If the insured acreage exceeds the contracted acreage, then all acreage will be insured at a weighted average price of contracted and non-contracted acreage. See subparagraph E(4).

When the SP restricts the total number of insured acres of a crop/P/T to not exceed 110 percent of the crop type's contracted acres then the entire 110 percent gets the contract price. If the crop/P/T is restricted by the SP to 110 percent of the contracted acres and the total insured acres is greater than 110 percent, then none of the insured acres for the crop/P/T can use the contract price, and all of the insured acres will use the RMA determined projected price or price election, as applicable.

Each projected price or price election, as determined in E, is limited to the maximum contract price. The maximum contract price is determined by multiplying the projected price or price election, as applicable, by the maximum contract price factor contained in the actuarial documents.

**C. Application, Cancellation, and Transfers**

The CPA must be elected on or before the SCD, and is continuous.

Cancellation of the CPA must occur on or before the cancellation date of the CP.

If the policy is transferred to a different AIP, a new CPA must be elected by the insured and submitted to AIP on or before the SCD.

**D. Determining Number of Acres Under Contract**

(1) For an acreage only based contract, the acres under contract will be the lesser of:

(a) insured acres (planted and PP acreage); or
(b) number of acres specified in the contract.

(2) For a production only based contract, the acres under contract will be lesser of:

(a) the number of acres determined by dividing the production stated in the contract by the approved APH yield; or

(b) insured acres (planted and PP acreage).

**D. Determining Number of Acres Under Contract (Continued)**

(3) For an acreage and production based contract that specifies a maximum number of acres, the acres under contract will be the lesser of:

(a) the number of acres determined by dividing the production stated in the contract by the approved APH yield;

(b) insured acres (planted and PP acreage); or

(c) number of acres specified in the contract.

**E. Determining Contract Price When CPA is Elected**

The contract price is the price contained in the contract without regard to incentives or discounts. When determining the contract price under CPA, the base price is the price which results from a specified calculation method in a contract. The premium amount is the added price above the base price for planned production and is not an incentive that is related to the performance of the crop production, such as quality, timing, etc.

(1) For yield protection or APH plans of insurance, the projected price or price election, applicable, will be:

(a) when the contract provides a fixed price for the contracted production, the contract price; or

(b) when the contract provides for a premium amount over a base price to be determined and:

(i) the base price is set on or before the ARD, the contract price; or

(ii) the base price is not set until after the ARD, the result of adding the premium amount to the applicable projected price or price election.

**Example:** The contract specifies the price is $2/unit of measure (e.g., bushel, pound, etc.) over a base price. The base price is determined after the ARD. The price election is $10/unit of measure, if the CPA was not elected. Under CPA the price election is $12/unit of measure ($10 + $2).

(2) For revenue protection:

(a) if the contract provides a fixed price for the contracted production:

(i) the projected price under the CPA is the contract price.

**E. Determining Contract Price When CPA is Elected (Continued)**

**Example:** The contract specifies a price for contracted production of $10/unit of measure. The projected price contained in the actuarial documents is $6/unit of measure, if CPA was not elected. Under the CPA, the projected price is $10/unit of measure, which is the contract price.

(ii) the harvest price under the CPA will be the result of the applicable projected price contained in the actuarial documents subtracted from the contract price and the difference added to the applicable harvest price released by RMA.

**Example:** The contract specifies a price for contracted production of $10/unit of measure. The projected price contained in the actuarial documents is $6/unit of measure, if CPA was not elected. The harvest price is $5/unit of measure, released by RMA. Under the CPA, the harvest price is $9/unit of measure ($10 - $6 + $5).

(b) if the contract provides for a premium amount over a base price that is set by the ARD, the contract is considered to be a fixed price contract and projected and harvest prices will be calculated as shown in E(2)(a).

(c) if the contract provides for a premium amount over a base price that is not set until after the ARD:

(i) the projected price under the CPA is the result of adding the premium amount to the applicable projected price contained in the actuarial documents.

**Example:** The contract specifies premium of $4/unit of measure over the base price as the price for contracted production. The base price will be determined after the ARD. The projected price contained in the actuarial documents is $7/unit of measure. Under the CPA, the projected price is $11/unit of measure ($7 + $4).

(ii) the harvest price is the result from adding the premium amount to the applicable harvest price released by RMA.

**Example:** The contract specifies premium of $4/unit of measure over the base price as the price for contracted production. The base price will be determined after the ARD. The harvest price released by RMA is $8/unit of measure. Under the CPA the harvest price will be $12/unit of measure ($8 + $4).

**E. Determining Contract Price When CPA is Elected (continued)**

(3) If there is more than one contract price for the crop, the projected price or price election under the CPA, as applicable, is calculated by:

(a) multiplying the acreage for each contract, as determined in D, by the contract price, as determined in E(1) or E(2), as applicable; and

(b) dividing the results by the total acres of all the contracts.

**Note:** Each contract price is limited to the maximum contract price.

(4) The weighted average price of contracted and non-contracted acreage for the crop/P/T is calculated according to the following table:

| Step | Action |
|---|---|
| 1 | Multiply the contracted acreage, as determined in D, by the contract price, as determined in E(1) or E(2), as applicable. Each contract price is limited to the maximum contract price. |
| 2 | Multiply the non-contracted acreage by the price contained in the actuarial document or CEPP, as applicable. |
| 3 | Add the result of step 1 and step 2. |
| 4 | Divide the result of step 3 by the total insured acres of the crop, planted and prevented planted acreage. |

**F. Proration of Contracted Unit of Measure When CPA is Elected in Multiple Counties**

The contracted bushels must be prorated to the appropriate counties when the contract(s) specifies total bushels from acreage planted in more than one county and the CPA is elected in multiple counties. The following table provides instructions for prorating the contracted bushels to multiple counties.

| Step | Action |
|---|---|
| 1 | For each county, multiply the acres planted to the contracted crop/P/T times the approved APH yield. For multiple APH database, multiply acres planted in each APH database by the applicable approved yield. |
| 2 | Sum the result for each county. |
| 3 | Sum each applicable county to determine the total bushels. |
| 4 | Divide the result of step 2 for each applicable county by the result of step 3 to determine the proration factor for that county. Round the result to three decimals. |
| 5 | Prorate the contracted bushels to each applicable county by multiplying the total contracted bushels times the result of step 4 for each applicable county. |

After prorating the contracted bushels to each county, determine the contract price according to subparagraph E.

## 916 SCO Endorsement General Information and Requirements

### A. General Information

The SCO Endorsement guarantee is established using information from the underlying policy. Since there are no units for SCO, policy protection is based on all planted acreage of the crop in the county insured by the underlying policy excluding acreage insured under STAX, see Para. 916M, or acreage/FN(s) covered by the ARC, see Para. 916J. If there are multiple coverage levels, types or practices for the insured crop in the county, the SCO supplemental protection will be determined separately for acreage insured at each coverage level, type and practice.

Since the SCO supplemental protection is based on the underlying policy, any premium and/or indemnity reduction made on the underlying policy will apply to the SCO Endorsement. For example, when the underlying policy premium and indemnity is reduced due to first and second insured crop limitations, (see Para. 1223 A and B) the protection under the endorsement will similarly be reduced. The SCO Endorsement must be purchased from the same AIP as the underlying policy.

### B. Endorsement Availability

The SCO Endorsement is available when provided in the actuarial documents.

### C. Eligibility Requirements

To be eligible for the SCO Endorsement, the insured must:

(1) have an insurance policy under the CCIP-BP and the applicable CP (referred to as the underlying policy);

(2) elect the SCO Endorsement on or before the SCD for the underlying crop policy; and

(3) comply with all terms and conditions of the SCO Endorsement.

### D. Coverage Percentage

The insured may choose a coverage percentage from 50 percent to 100 percent, with 100 percent being the default coverage percentage if unspecified by the insured.

### E. SCO Plans of Insurance

When elected, the SCO Endorsement establishes a separate plan code for the SCO Endorsement coverage for IT processing purposes only. The SCO Endorsement has three plan of insurance codes which are based on the underlying policy's plan of insurance. The table below provides the applicable SCO Endorsement plan of insurance codes based on underlying policy's plan of insurance.

**E. SCO Plans of Insurance (Continued)**

| Underlying Policy Plan of Insurance Code | SCO Endorsement Plan of Insurance Code |
|---|---|
| YP - 01 | 31 |
| RP - 02 | 32 |
| RP-HPE - 03 | 33 |
| Yield Based Dollar Amount of Insurance - 55 | 31 |
| APH - 90 | 31 |

**Example:** If the insured has elected the SCO Endorsement and has Yield Protection 01 for their underlying policy, the insured's policy would be submitted to RMA as the SCO Endorsement plan of insurance code 31.

Although the SCO Endorsement creates an insurance plan for processing to RMA, the actuarial documents identify SCO Endorsement availability as additional tabs, for the underlying policy's plan of insurance, in the actuarial documents.

**F. Continuous Endorsement**

The SCO Endorsement is a continuous endorsement and will remain in effect until cancelled by the insured or the AIP on or before the cancellation date.

**G. Cancellation or Policy Change**

(1) If the insured's underlying policy for the crop is cancelled or terminated, coverage under the SCO Endorsement is automatically cancelled.

(2) Other changes made to the underlying policy do not cancel the SCO Endorsement. The SCO Endorsement will provide supplemental coverage based on the changes to the coverage level or plan of insurance of the underlying policy.

**Example:** The insured changes their coverage level on their underlying policy from 80 percent to 70 percent. Their SCO Endorsement coverage will change from covering 80 to 86 percent to covering 70 to 86 percent, increasing SCO coverage from 6 percent to 16 percent.

**H. Written Agreements**

(1) A WA to add the SCO Endorsement to an underlying policy when the SCO Endorsement is not provided in the actuarial documents for the crop/county/P/T is not authorized.

**H. Written Agreements (Continued)**

**Example:** The insured has a XC WA (which allows insurance for a crop when insurance is not available in that county for that crop) for corn, which references another state/county where the SCO Endorsement is available. SCO does not apply to the county where the XC insurance offer was issued because SCO is only available in counties where it is listed in the actuarial documents.

(2) If the SCO Endorsement is available in the actuarial documents for the crop/county/P/T where the crop is physically located, the SCO Endorsement may be elected when a WA applies to the underlying policy.

**Example:** The insured has a HR WA on their underlying policy for the crop/county/P/T and the SCO endorsement is available for the crop/county/P/T. Since the SCO Endorsement is available for the crop/county/P/T, the WA is applicable to the SCO Endorsement.

**I. Impact of High-Risk Land**

(1) High-risk acreage insured by the underlying policy is insured under SCO.

(2) Any high-risk acreage excluded from an underlying policy under the High Risk Land Exclusion Option is not insured under SCO, unless the high-risk acreage is insured under a CAT policy. If the high-risk acreage is insured under a CAT policy the insured may elect to insure their high-risk acreage under the SCO Endorsement.

(3) When high-risk acreage is insured under a separate policy by the HR-ACE, the SCO Endorsement must be elected on the HR-ACE policy when the insured elects the SCO Endorsement on their base policy.

**J. Impact of Agriculture Risk Coverage Program (ARC)**

ARC is a program administered by the FSA. ARC is elected on a FSA crop/FN basis and SCO is elected on a crop/county basis. Benefits cannot be received for both ARC and SCO on the same acreage/FN(s) of the crop. If these elections have been made, the insured is required to report which acreage/FN(s) are under the SCO Endorsement and which acreage/FN(s) are under ARC. See Para. 917B for more information.

**K. Impact of Native Sod Acreage**

The native sod acreage premium subsidy reduction of 50 percentage points less than the premium assistance identified in the actuarial documents is applicable to the SCO Endorsement premium.

**L. Underlying Policy Requirements**

The SCO Endorsement can only be elected if the insured has an underlying policy insured under the CCIP-BP with the same AIP as the underlying policy. The SCO Endorsement is not available with ARPI.

**M. SCO and Stacked Income Protection Policy (STAX)**

The insured may elect both the SCO Endorsement and STAX for upland cotton if they meet the eligibility requirements of both programs. However, the insured cannot insure the same acreage under both the SCO Endorsement and STAX.

If the insured has elected both the SCO Endorsement and STAX, then the upland cotton must be insured under the CCIP-BP. If the underlying policy is ARPI or a standalone STAX policy, the SCO Endorsement is not available for the insured's upland cotton.

No later than the STAX SCD, the insured must designate which acres of upland cotton in the county will be covered by STAX and which acres will be covered by SCO:

(1) The insured must provide a production report for the CCIP-BP policy for the preceding year by the STAX SCD. The production report will be used by the AIP to establish the insured's CCIP-BP APH database(s).

(a) The insured must designate the acreage for SCO and STAX coverage by identifying whether SCO or STAX applies to each CCIP-BP APH database. AIPs will capture the insured's designation by plan codes 31, 32, or 33 for SCO and plan codes 35 or 36 for STAX (see STAX Standards Handbook for explanation of STAX plan codes) in the "Other" field of the APH database. Although an insured's signature is not normally required on an APH database, the insured must sign and date the APH database(s) certification and the AIP must include the Document and Supplemental Standards Handbook required statements on the APH database(s) certification.

**Note:** An APH database cannot be established lower than the optional unit/practice/type, unless one of the exceptions provided in Para. 1505B applies.

(b) An insured is allowed to recertify their production history and the AIP may update the CCIP-BP APH database(s) through the CCIP-BP production reporting date. However, the designation for each APH database as SCO or STAX coverage must not be changed after the SCD.

(2) The insured may identify on the STAX Application whether SCO or STAX coverage applies to any acreage added to the operation that requires a new CCIP-BP APH database. If no designation is made, the acreage is covered under SCO.

**N. Duplicate Policy Exceptions**

The SCO Endorsement is not considered a duplicate policy when available on the actuarial documents.

**O. Uninsured Causes of Loss**

Indemnities will not be paid on acreage that has been determined to have been solely damaged by causes of loss not covered by the underlying policy.

## 917 SCO Endorsement Acreage Reporting

### A. Acreage Reporting Requirements for SCO

Because the SCO Endorsement uses the underlying policy's acreage report, an insured is not required to submit an additional acreage report for the SCO Endorsement.

**Exception:** Additional information is required when an insured elects the SCO Endorsement and ARC in a county for a crop on a FSA FN(s).

The AIP must determine protection provided under the SCO Endorsement, by coverage level, type and practice when applicable. The Summary of Coverage/Schedule of Insurance must provide the protection, premium and administrative fee for the SCO Endorsement.

### B. Acreage Reporting Requirements When Both SCO and ARC Are Applicable

When an insured has elected the SCO Endorsement in a county for the crop and has a share in any acreage in the county for which ARC has been elected for the crop, the insured is required to report which acreage/FN(s) are under the SCO Endorsement and which acreage/FN(s) are under ARC. The same crop cannot have both the SCO Endorsement and ARC on the same acreage/FN(s).

(1) The insured's acreage report must:

(a) identify which acreage/FN(s) of the crop is covered by ARC by reporting all acreage of the crop by FSA farm/tract/field number by the acreage reporting date; and

(b) identify acreage/FN(s) of the crop covered under ARC with the acreage type of "J", ineligible SCO acres due to ARC election.

**B. Acreage Reporting Requirements When Both SCO and ARC Are Applicable (Cont.)**

**Example:** The insured has elected the SCO Endorsement for soybeans in the county and ARC was elected on FN 1234 and 4512 for soybeans in the county. Because both the SCO Endorsement and ARC were elected for soybeans in the same county, all soybean acreage must be identified by farm/tract/field on the acreage report. Additionally, soybean acreage on FN 1234 and 4512 must be identified with the acreage type of "J".

| CY | Crop | Unit # | FSA FN/Tract/Field(s) | Acres | Acreage Type |
|---|---|---|---|---|---|
| 2019 | Soybeans | 0001-0001 OU | 1234-54321-01 | 20.0 | J |
| 2019 | Soybeans | 0001-0001 OU | 1234-54321-02 | 15.5 | J |
| 2019 | Soybeans | 0001-0002 OU | 1234-67891-01 | 44.0 | J |
| 2019 | Soybeans | 0002-0001 OU | 6789-12345-01 | 80.0 | |
| 2019 | Soybeans | 0002-0002 OU | 6789-54321-03 | 60.0 | |
| 2019 | Soybeans | 0003-0001 OU | 4512-66779-02 | 55.0 | J |
| 2019 | Soybeans | 0003-0001 OU | 4512-54776-01 | 120.0 | J |

(2) In addition to any other penalties for incorrect reporting, if the insured has incorrectly reported any information required in (1) above and the correct information results in:

(a) Acreage that is insurable under the SCO Endorsement that was reported as uninsurable, coverage under the SCO Endorsement will not be provided for such acreage;

(b) Acreage that is uninsurable under the SCO Endorsement that was reported as insurable, the SCO Endorsement for the acreage of the insured crop on a FN where ARC has been elected will be revised, no indemnity will be payable, and the insured is required to pay 20 percent of the premium to offset the cost incurred by the AIP in servicing the SCO Endorsement; and

(c) Acreage/FN(s) that had both the SCO Endorsement and ARC elected for the crop, that acreage/FN(s) with both elections will be ineligible for the SCO Endorsement in current crop year.

## 918 SCO Endorsement Determining Supplemental Protection and Indemnity

**A. Supplemental Protection**

To calculate the supplemental protection for all planted acres of the crop in the county with the same coverage level, type and practice:

(1) Determine the insured's supplemental coverage range by subtracting the coverage level of the insured's underlying policy from the area loss trigger of 86 percent.

**A. Supplemental Protection (Continued)**

(2) Divide the liability of the underlying policy by the coverage level of the underlying policy to determine the expected crop value. When the underlying policy is RP, the expected crop value may go up at the time of harvest.

(3) Multiply the supplemental coverage range from (1) by the expected crop value from (2) and by the coverage percentage selected by the insured to determine the supplemental protection provided by SCO.

If there are multiple coverage levels, types, or practices for the insured crop in the county, the insured's supplemental protection will be determined separately for the acres at each coverage level, type, and practice.

**B. Indemnity**

An indemnity will be due under the SCO Endorsement if:

(1) For RP underlying policies, the final area revenue is less than the expected area yield multiplied by the higher of the projected price or harvest price and by the area loss trigger. The payment factor for RP underlying policies for each coverage level, type and practice is calculated as follows:

(a) multiplying the expected area yield by the higher of the projected price or harvest price;

(b) dividing the final area revenue by the result of (a);

(c) subtracting the percent from (b) from the area loss trigger; and

(d) dividing (c) by the supplemental coverage range to determine the payment factor.

(2) For RP-HPE underlying policies, the final area revenue is less than the expected area revenue multiplied by the area loss trigger. The payment factor for RP-HPE underlying policies for each coverage level, type and practice is calculated as follows:

(a) dividing the final area revenue by the expected area revenue;

(b) subtracting the percent from (a) from the area loss trigger; and

(c) dividing (b) by the supplemental coverage range to determine the payment factor.

(3) For all other underlying policies, the final area yield is less than the expected area yield multiplied by the area loss trigger. The payment factor for all other underlying policies for each coverage level, type and practice is calculated as follows:

**B. Indemnity (continued)**

(a) dividing the final area yield by the expected area yield;

(b) subtracting the percent from (a) from the area loss trigger; and

(c) dividing (b) by the supplemental coverage range to determine the payment factor.

(4) All payment factors are limited to a maximum of 1.000.

(5) Indemnity is calculated by multiplying the supplemental protection by the payment factor for each coverage level, type, and practice. Indemnities will be calculated and paid under the SCO Endorsement within 30 days after final area yield and revenue has been released.

**919-1000 (Reserved)**

# PART 10 UNITS
## Section 1 Basic Units

### 1001 Availability

The insured automatically qualifies for BUs without exception. A BU, unless otherwise specified in the CP or SP, is all insurable acreage of the insured crop in the county on the date coverage begins for the crop year in which the insured has:

**A. 100 Percent Share in the Crop**

This includes share as owner/operator and/or land that is rented for cash, a fixed commodity payment or any consideration other than a share in the crop.

**B. Less Than 100 Percent Share in the Crop**

Land owned by one person and operated by another person on a share basis. A crop shared with each different landlord, tenant or sharecropper is a separate BU. Reversed roles do qualify for separate BUs. (Example: The insured is a landlord on part of the farming operation and a tenant on another part of the farming operation.) Varying percentages of shares within a BU do not qualify for separate BUs.

**Example:** An insured owns land and rents land from five landlords-three on a crop share basis and two on a cash lease basis. The insured would be entitled to four BUs, one for each crop share arrangement and one that combines the two cash leases and the land owned by the insured.

**Example:** The Tobacco CP provides in lieu of the BP, a BU is all insurable acreage of an insurable type of tobacco in the county in which the insured has a share on the date of planting for the crop year and that is identified by a single FN at the time insurance attaches.

### 1002 Premium Discount

A premium discount may be applicable as provided in the actuarial documents for certain crops when BUs are not divided into OUs. Only planted acres are used when determining the appropriate BU discount factor contained in the actuarial documents. Any applicable BU discount factor applies to planted and PP acres, if applicable, in the BU when determining premium.

For each BU of an eligible crop that is not divided into OUs, the unit's premium (including CAT imputed premium) will be decreased by the BUD. The discount also applies if only one OU within a BU is planted and earning premium. The appearance of OU numbers on the acreage report does not automatically indicate that the discount will not apply.

Once OUs are elected by the insured and processed by the AIP on the acreage report, the full premium (without discount) is earned. However, if the acreage report is revised and the revision changes the unit arrangement to a BU, the BUD (if applicable) will be based on the revised acreage report if the AIP determines failure to comply with the OU requirements was inadvertent.

## 1003 CAT Endorsement

The CAT Endorsement generally limits the units available for each insured crop to BUs determined only by the crop share arrangement; on the date coverage begins for the crop year. See Para. 1001.

OUs or further BUs (e.g., type, non-contiguous land, FSA FN, etc.) defined in the applicable CP or SP are not allowed for CAT coverage. See the CAT Endorsement for the unit definition.

## 1004 APH Database Establishment

APH databases must be established for each BU by actuarial offer.

## 1005 APH Databases Below BU Level

APH databases below the BU level must be maintained by the AIP, if separate P/T/TMA/Other Characteristics are contained on the actuarial documents. In addition, APH databases below the BU level must be maintained by the AIP when:

(1) the insured elects to insure on a WU, EU, or BU basis or has CAT coverage; and

(2) the insured provides separate production reports for acreage that would qualify for separate OUs under the terms of the policy or as specified in APH procedures.

Once APH databases below the BU level are established, they must be maintained. Production reports are required for each APH database and the AIP must submit all APH databases to RMA. The approved APH yield reported on the acreage report must match the corresponding APH database within the BU (e.g., same section). If the insured does not provide a production report on the basis of the APH databases below the BU level or if production is commingled between the APH databases below the BU level, the AIP shall prorate the production and acreage to APH databases with planted acres. If the insured certifies production on the production report at a level below the BU, they must have acceptable records at the level reported or assigned yields will apply (see Para. 1303A for additional details).

As provided by the policy or approved procedures, APH databases must not be established for acreage that would not qualify for separate OUs for crop/P/T/TMA see Para. 1505. Any liability, premium, and indemnity payments will be based on the BU structure, regardless of any APH databases that may be established below that level.

## 1006 Commingled Acres and Production

Acres and production prorated between BUs are not acceptable production evidence for BUs. Multi-Purpose Production and Yield Worksheet (commingled production worksheet) cannot be used to prorate acreage and production between BUs.

**1006 Commingled Acres and Production (continued)**

**Exception:** If the insured has a loss for the current crop year, the insured is required to maintain production evidence to support the current crop year's unit arrangement as shown on the acreage report. If, at loss time, production is discovered to be commingled between BUs, the production must be apportioned or prorated, as applicable, to the appropriate BU. The apportioned or prorated production is used to process both the current year's claim and the following crop year's production reports.

**1007-1020 (Reserved)**

## 1021 Availability

Land that would otherwise be one BU may be divided into OUs according to the OU definition contained in the BP, CP and/or SP. OUs are not available for crops insured under CAT. Separate OUs are available for additional coverage policies only and are determined by the following order of precedence.

### A. Section

Separate OUs are available for sections. The boundaries of the section must be readily discernible by the AIP without using survey instruments or locating survey markers. See Para. 1073.

### B. Section Equivalents

Separate OUs are available for section equivalents in the absence of sections. See Para. 1073 for definitions and examples of a section or section equivalent.

The boundaries of the section or section equivalent must be readily discernible by the AIP without using survey instruments or locating survey markers.

### C. Separate FSA FNs

Separate OUs are available by separate FSA FNs in the absence of sections, section equivalents, or other unit division arrangements provided by RMA approved procedures, such as WUA or UDO. Additionally, OUs are available by FSA FNs:

(1) in areas where survey boundaries are not readily discernible; or

(2) in Alabama, Arkansas, Florida, Louisiana, and Mississippi for Barley, Corn, Cotton, Grain Sorghum, Oats, Rice, Rye, Soybeans, and Wheat as provided in the SP.

The boundaries of the FSA FNs must be readily discernible by the AIP without using survey instruments or locating survey markers.

### D. Written Unit Agreement (WUA)

Separate OUs are available for WUA approved by the RMA RO.

### E. Unit Division Option (UDO)

Separate OUs are available by UDO approved by the AIP, where available. UDOs are used to aggregate two or more (any shape) legally identifiable parcels of land into section equivalents for OU division purposes in lieu of FSA FNs see Para. 1074.

**F. IRR and NI Practice**

If all the requirements in Para. 1024 are met, separate OUs are available by IRR and NI practices within a single section, section equivalent, FSA FN, WUA, or UDO.

(1) To qualify as separate IRR and NI OUs:

(a) CP must allow division of OUs by IRR and NI;

(b) the NI acreage may not continue into the IRR acreage in the same rows or planting pattern see (2) (c) below for exception; and

(c) the IRR acreage may not extend beyond the point at which the irrigation system can deliver the quantity of water needed to produce the yield on which the guarantee is based.

**Exception:** The NI corners of a field in which a center-pivot irrigation system is used may be considered as IRR acreage if the NI corners of a field in which a center-pivot irrigation system is used do not qualify as a separate NI OU and production from both practices will be used to determine the IRR approved yield. If NI is not insurable for the county/crop, the NI corners cannot be insured as irrigated acreage with the center-pivot irrigation system.

(2) Additional center pivot instructions:

(a) if the crop's planting pattern/rows continue into one or more NI corners of the field and the portion of the field IRR by a center pivot irrigation system (circle), the acreage within intersecting lines drawn at right angles to the radius of the center pivot is not eligible for a separate optional NI unit see (c) below for exception.

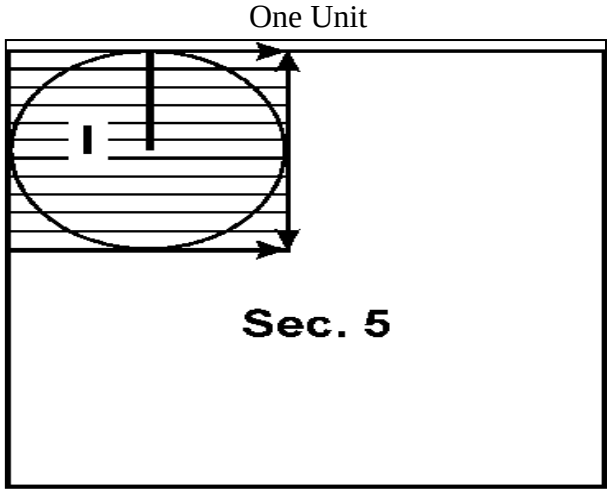

**F. IRR and NI Practice (continued)**

(b) if the crop's planting pattern/rows continue between the NI corners of the field and the portion of the field IRR by a center pivot irrigation system (circle), but do not extend into other NI acreage in the same section, section equivalent, or FSA FN; other NI acreage can qualify as a separate NI OU if the requirements are met.

May qualify for two units

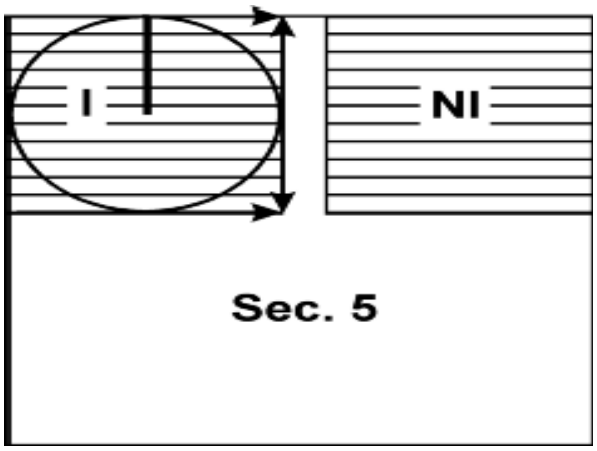


(c) if the crop's planting pattern/rows continue between the NI corners of the field and the portion of the field IRR by a center pivot irrigation system (circle), the insured has yield monitor data separating IRR production from NI production; and is practicing precision farming techniques.

May qualify for two units using yield monitors
and precision farming

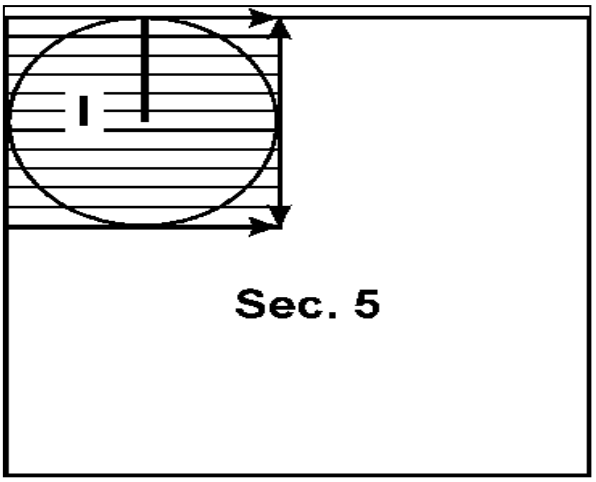

**F. IRR and NI Practice (continued)**

(d) if the crop's planting pattern/rows extend beyond intersecting lines drawn at right angles to the radius of a center pivot into other NI acreage of the crop in the same section, section equivalent, FSA FN; the insured is not eligible for a NI OU.

One Unit

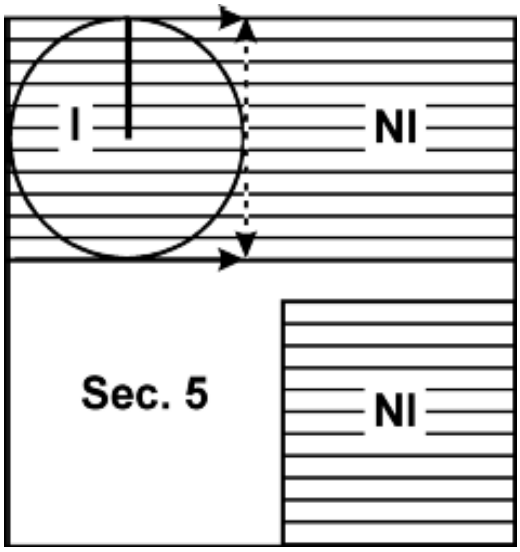


**G. Organic Farming Practice**

Separate OUs may be established for acreage of the insured crop grown and insured under an organic farming practice in addition to, or instead of, establishing OUs by section, section equivalent or FSA FN, or irrigated and non-irrigated acreage. However, certified organic, transitional and buffer zone acreages do not individually qualify as separate units (would be contained in the same OU). In the example below, there are two possible OUs, unit 0001-0001 (NI conventional acreage) and unit 0001-0002 (NI certified organic and NI transitional acreage).

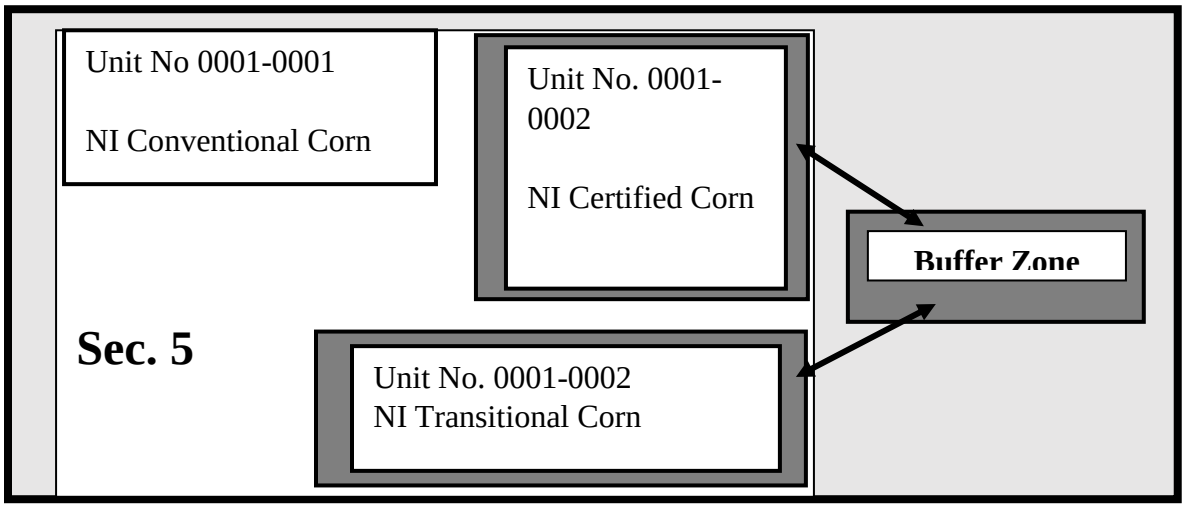

### H. Policy Authorization

Separate OUs are allowed by certain perennial CPs on non-contiguous land. Other CP may allow OUs based on different types or planting periods. Additionally, some crops require authorization in the SP for separate OUs to be applicable.

**Example:** The Apple CP allow for OUs on non-contiguous land; Dry Beans CP allow OUs by type (e.g., pinto, great northern, etc.); and Tobacco allows OUs by SP authorization.

## 1022 APH Database Below OU Level

APH databases below the OU level must be maintained by the AIP, if separate P/T/TMA/Other Characteristics are contained on the actuarial documents. As provided by the policy or approved procedures, APH databases must not be established for acreage that does not qualify for separate OUs for crop/P/T/TMA/Other Characteristics. APH databases below the OU/P/T/TMA/Other Characteristics level may only be maintained by the AIP if the criteria in Para. 1505 are met.

The approved APH yield reported must match the corresponding APH database within the OU (e.g., same section). Once APH databases are established they must be maintained with production reports for each APH database required and the AIP must submit them to RMA.

Any liability, premium and indemnity payments will be based on the OU structure, regardless of any APH databases that may be established below that level based on the criteria in Para. 1505.

## 1023 Combination of OUs

OUs will be combined into the BU from which they were formed if insured does not comply with the OU requirements.

## 1024 OU Qualifications

To qualify for an OU, all of the following apply.

### A. Acceptable Production Report

Acceptable production reports must be filed for at least the most recent APH crop year in the base period according to the OUs requested for the current crop year. See Para. 1302. The following exceptions apply.

(1) The insured is a new producer who has not produced the crop, is not providing records from another person sharing in the crop, and intends to keep separate acreage and production records by P/T according to the OU division requirements. See Para. 1731.

**A. Acceptable Production Report (continued)**

(2) New land or a new P(IRR or NI)/T is added to the operation for the current crop year which meets all OU requirements; and the insured has not produced the crop, is not providing records from another person sharing in the crop on that acreage, and intends to keep separate acreage and production records according to OU provisions.

(3) A person (or any member of the insured person) has NOT produced or shared in the crop for more than two APH crop years in the county in the last 10 calendar years preceding the current crop year (11 calendar years for crops with a lag year) if a variable T-Yield exception is approved by the RMA RO and the person intends to keep separate acreage and production records according to OU requirements. See Para. 1738.

Inaccurate information on the production report must be corrected, such as: acreage or production on a reported unit; transpositions of numbers; or incorrectly reporting quality adjustment. See LAM to determine any liability adjustment factor.

Reporting a previously unreported unit is not considered a correctable error.

**B. Clear and Discernible Break in Planting Pattern**

The crop must be planted in a manner that results in a clear and discernible break in the planting pattern at the boundaries of each OU.

**Exception:** If a geographic or topographic feature causes an insured to plant across section/section equivalent lines, the insured may qualify for a WUA see WAH.

**Exception:** For pears, OUs may either be established in accordance with Para. 1021 and Para. 1024B or by non-contiguous land, but not both. In addition to this requirement, the SP may allow OUs by type. For OUs by type, the requirement that the crop be planted in a manner that results in a clear and discernible break in the planting pattern at the boundaries of each OU are not applicable.

Planted includes the original planting, including any reseeding, or replanting. Cultivating, disking, mowing, etc., between sections, section equivalents, FSA FNs, etc., after planting or harvesting does not qualify the acreage for OUs.

**Exception:** For center pivot irrigation systems only, planting end rows either before or after planting the crop or cultivating, disking, mowing, etc., after the crop was planted between the IRR acreage and the NI corners of a center pivot system may be used to establish breaks between IRR and NI planting patterns for OU purposes.

### B. Clear and Discernible Break in Planting Pattern (Continued)

Such breaks will be acceptable only if completed on or before the ARD for the crop and are clearly discernible if a subsequent inspection is required during the crop year (appraisal, claim for indemnity, APH review, etc.).

Producers using precision farming technology, identifying the boundaries (between the IRR and NI acreage of the center pivot) and GPS yield monitors that document the production separately, are considered to meet the discernible break requirements between the IRR and NI acreage. See Para. 1021F.

Additionally, if IRR and NI practices are carried out within a single section, section equivalent, or FSA FN, proper planting and fertilization practices must be carried out for each respective practice; and records of harvested production must also be maintained separately for each practice.

## 1025 Production Evidence

### A. Most Recent APH Crop Year

The insured must have acceptable production evidence for the most recent APH crop year of planted acreage and production used to determine the approved APH yield or amount of insurance for each OU.

If the insured has a loss for the current crop year, the insured is required to maintain production evidence to support the current crop year's unit arrangement as shown on the acreage report. If, at loss time, production is discovered to be commingled between OUs, the units with commingled production must be combined on the current crop year's claim for indemnity. However, the acreage and production history is continued to be maintained separately unless combined according to Para. 1085.

For the subsequent crop year (the claim record must be used for APH), the insured will not qualify for OUs on the combined unit.

### B. Prior APH Crop Years

When a new insured is unable to provide separate acceptable production reports on an OU basis for APH crop years prior to the most recent APH crop year but provides acceptable records of acreage by unit and production for each BU by P/T, production for OUs within a BU may be determined on a prorated basis (except for OUs determined by P/T), and applied to OUs with planted acres.

When a new insured is unable to provide acceptable production reports or records of planted acreage of the crop to prorate the production for OUs, such years are not acceptable for APH purposes when OUs are requested.

**B. Prior APH Crop Years (Continued)**

**Example:** 100 acres, 150 acres, and 50 acres were planted on units 0001-0001, 0001-0003 and 0001-0005 respectively. The insured has records of 37,500 bu. total production, 37,500 ÷ 300 = 125 bushels per acre.

For unit 0001-0001: 12,500 (100 acres x 125 bu.), 100.0 acres and "PA"125 bu. are entered on the APH database in the Total Production, Acres, and Yield columns respectively.

For unplanted units 0001-0002 and 0001-0004, 0.0 is entered in the acres column and "Z" in the yield column.

The insured is eligible for five OUs.

**C. Subsequent Crop Years**

If OUs are desired, acceptable production reports must be filed for each OU.

Acceptable production evidence such as; farm management records for Category B APH crops, must indicate planted acres and production for each OU and account for all planted acreage and total production. This evidence must be available for each subsequent APH crop year.

Acres and production submitted to qualify for OUs for the previous crop year may not be combined into a BU (or OU) and then prorated if the insured wishes to continue to qualify for OUs. For additional limitations for combining OUs, refer to Part 13 Section 7.

## 1026 Assigned Yields

Assigned yields will apply for all planted units of the crop that do not have loss claim records and OUs will be combined if:

(1) acceptable production reports are not provided;

(2) production reports are provided with one or more units not reported; or

(3) production reports are provided, however, acceptable production evidence is not maintained or available. See Part 14 for acceptable production evidence. To be acceptable, the production evidence must account for all planted acreage and production used to determine the production guarantee for each OU and match the production certified by the insured. See Para. 1597 for exception.

When assigned yields are used for the most recent crop year of the base period, OU provisions do not apply for the crop/county. OUs will be combined at the time of loss adjustment if the insured failed to meet any provision required to qualify for OUs. BUs cannot be further divided into OUs at the time of loss adjustment.

Situations in (1)-(3) above are not correctable after the current year's PRD. However, these situations may be corrected in subsequent years prior to the PRD.

**1027 Determining OUs**

OUs are determined on or before the ARD, provided production reports were properly reported on an OU basis on or before the PRD. However, OUs may be changed to BUs on or before the ARD at insured's discretion. OUs may be converted to BUs after the ARD if the AIP determines the requirements for OUs are not met.

**1028-1030 (Reserved)**

## 1031 Availability

(1) An EU consists of all insurable acreage of the same insured crop or all insurable irrigated or non-irrigated acreage of the same insured crop in the county in which the insured has a share on the date coverage begins for the crop year. See Part 10 Section 5 for examples.

(a) When an insured elects a single EU for all of the crop acreage in the county (not by irrigated practice and/or non-irrigated practice) the unit structure code provided in the actuarial documents for this election is EU.

(b) When allowed by the actuarial documents, an insured may elect separate EUs by irrigated and/or non-irrigated practices. The insured may elect one EU for all irrigated practices and/or one EU for all non-irrigated practices. The unit structure code provided in the actuarial documents for this election is EP. If the insured does not separately designate on an Application or Policy Change Form which irrigation practice they want EP election to apply to, it will apply to both irrigation practices (one EU for all irrigated practices and one EU for all non-irrigated practices).

**Exception:** EUs by practice are not allowed under the HR-ACE.

(2) EUs are only available on additional coverage policies for crops:

(a) for which revenue protection is available regardless of whether yield protection or revenue protection is elected;

(b) for which revenue protection is not available, if authorized by the SP; and

(c) if shown as an authorized unit structure in the actuarial documents.

## 1032 EU Election

EU must be elected, on or before the earliest SCD, on an Application or Policy Change Form.

(1) For counties with a fall or winter SCD and a spring SCD specified in the actuarial documents, the unit election may be changed on or before the spring SCD if there is no insured fall planted acreage of the insured crop.

(2) The EU Election is continuous and remains in effect from year to year unless cancelled in writing by the insured by the earliest cancellation date for the next crop year.

If the insured has an EU in effect and does not qualify for the current crop year the election will continue to apply in subsequent crop years. See Para. 1033 below.

(3) An EU may not be further divided except as specified in this procedure. However, the unit structure may be changed based on information determined to be correct when adjusting a loss or at any other time.

**1033 EU Qualifications**

To qualify for an EU, all of the following must apply.

(1) The EU must contain all of the insurable acreage:

(a) of the same insured crop in the county as one EU; or

(b) of irrigated acreage as one EU and/or of non-irrigated acreage as one EU for the same insured crop in the county, if allowed by the actuarial documents. The insured may elect one EU for all irrigated practices and/or one EU for all non-irrigated practices.

(i) When the insured elects to have separate EUs for all irrigated and non-irrigated practices, two separate EUs will be established, one EU for all insurable irrigated acreage of the crop and a second EU for all insurable non-irrigated acreage of the crop, as long as both units separately meet the EU requirements below in (2). If the insured fails to qualify for an EU on either of the irrigated or non-irrigated acreage, the insured loses the option to select separate EUs by practice, and unit structure will be assigned according to Para 1037(2).

(ii) When the insured elects to have a separate EU for all irrigated or non-irrigated practices, only one EU is established for all insurable acreage of the irrigation practice the insured elects to insure as an EU and may elect BUs or OUs for the other irrigation practice. For example, the insured elects EU for all irrigated practices and elects to insure all non-irrigated practices as BUs or OUs. The irrigation practice that the insured elects to insure as an EU must meet the EU requirements below in (2). If the insured fails to qualify for an EU on the irrigation practice they elected to insure as EU, unit structure for both irrigation practices will be assigned according to Para. 1037(3).

(2) The acreage in an EU must be located in:

(a) two or more sections, if OUs are available by sections;

(b) two or more section equivalents, if OUs are available by section equivalents;

(c) two or more FSA FNs, if OUs are available by FSA FNs;

(d) any combination of two or more sections, section equivalents, or FSA FNs, if more than one of these is the basis for OUs;

(e) two or more units as established by WUA or UDO; or

(f) one section, section equivalent, or FSA FN that contains at least 660 planted acres, based on the type of parcel that is utilized to establish OUs.

Items (a)-(e) above that are used to qualify for the EU must have planted acreage that constitutes at least the lesser of 20 acres or 20 percent (20 acres/20 percent) of the insured crop acreage in the EU. If there is planted acreage in more than two sections, section equivalents, FSA FNs or units established by written agreement, these can be aggregated to form at least two parcels to meet this requirement.

**Example 1:** If sections are the basis for OUs and the insured has 80 planted acres in section 15, 10 planted acres in section 34, and 10 planted acres in section 35, sections 34 and 35 may be aggregated to meet the 20 acres/20 percent requirement.

**Example 2:** The insured elects separate EUs for irrigated and non-irrigated practices. Sections are the basis for OUs and the insured has planted acreage of the crop as follows: 80 irrigated and 7 non-irrigated acres in section 15, 10 irrigated and 10 non-irrigated acres in section 34, 10 irrigated acres in section 35, and 40 non-irrigated acres in section 36.

To qualify for the irrigated EU, the insured has 80 irrigated acres in section 15 and can aggregate the 10 irrigated acres in section 34 and 10 irrigated acres in section 35 to meet the 20 acres/20 percent requirement. To qualify for the non-irrigated EU, the insured has 40 non-irrigated acres in section 36 and can aggregate the 7 non-irrigated acres in section 15 and 10 non-irrigated acres in section 34 to meet the 20 acres/20 percent requirement.

**Calculation for qualifying for irrigated EU:**

Total acres = 100 (80+10+10)
20 percent of total acres = 20 (100 x .20)

Section 15 with 80 acres is greater than 20 acres and greater than 20 percent.

Section 34 with 10 acres and section 35 with 10 acres aggregated together (10 + 10 = 20) meets the 20 acres/20 percent requirement.

The requirement of two or more sections with 20 acres/20 percent is met.

**Calculation for qualifying for non-irrigated EU:**

Total acres = 57 (7+10+40)
20 percent of total acres = 11.4 (57 x .20)

Section 15 with 7 acres and section 34 with 10 acres aggregated together (7+10=17) meets the 20 percent requirement.

Section 36 with 40 acres is greater than 20 acres and also greater than 20 percent.

The requirement of two or more sections with 20 acres/20 percent is met.

**Example 3:** The insured elects separate EUs for irrigated and non-irrigated practices. Sections are the basis for OUs and the insured has planted acreage of the crop as follows: 80 irrigated and 4 non-irrigated acres in section 15, 10 irrigated and 6 non-irrigated acres in section 34, 10 irrigated acres in section 35, and 50 non-irrigated acres in section 36. The insured does not qualify for separate EUs by irrigated and non-irrigated practices because the non-irrigated acreage does not meet the 20 acres/20 percent requirement for two or more sections and unit structure will be assigned according to Para. 1037(2).

**Calculation for qualifying for irrigated EU:**

Total acres = 100 (80+10+10)
20 percent of total acres = 20 (100 x .20)

Section 15 with 80 acres is greater than 20 acres and greater than 20 percent.

Section 34 with 10 acres and section 35 with 10 acres aggregated together (10 + 10 = 20) meets the 20 acres/20 percent requirement.

The requirement of two or more sections with 20 acres/20 percent is met.

**Calculation for qualifying for non-irrigated EU:**

Total acres = 60 (4+6+50)
20 percent of total acres = 12 (60 x .20)

Section 36 with 50 acres is greater than 20 acres and also greater than 20 percent.

Section 15 with 4 acres and section 34 with 6 acres aggregated together (4+6=10) does not meet 20 acres/20 percent requirement.

The requirement of two or more sections with 20 acres/20 percent is not met for each proposed EU. Insured does not qualify for separate EUs by irrigated and non-irrigated practices. However, the insured would qualify for a single EU because the requirement of two or more sections with 20 acres/20 percent for a single EU by crop/county has been met.

**Example 4:** The insured elects a separate EU for all irrigated practices and elects to insure all non-irrigated practices as BUs or OUs. Sections are the basis for OUs and the insured has planted acreage of the crop as follows: 65 irrigated acres in section 15 and 35 irrigated acres in section 34.

**Calculation for qualifying for irrigated EU:**

Total acres = 100 (65+35)
20 percent of total acres = 20 (100 x .20)

Section 15 with 65 acres is greater than 20 acres and greater than 20 percent.

Section 34 with 35 acres is greater than 20 acres and greater than 20 percent.

The requirement of two or more sections with 20 acres/20 percent is met. The insured qualifies for a separate EU for all irrigated practices and can elect to insure all non-irrigated practices as BUs or OUs.

(3) The crop must be planted in a manner that results in a clear and discernible break in the planting pattern at the boundaries of the irrigated and non-irrigated acreage to qualify for EUs by irrigated and non-irrigated practice. The additional center pivot instructions in Para. 1021F(2) for determining irrigated and non-irrigated acreage also apply to EUs.

"Planted" means the original planting, including any reseeding or replanting. Cultivating, disking, mowing, etc., after planting or harvesting does not qualify for separate EUs by irrigated and non-irrigated practices.

**Exception:** For center pivot irrigation systems only, planting end rows either before or after planting the crop or cultivating, disking, mowing, etc., after the crop was planted between the IRR acreage and the NI corners of a center pivot system may be used to establish breaks between IRR and NI planting patterns for separate EUs by irrigated and non-irrigated practices.

Such breaks will be acceptable only if they are completed on or before the ARD for the crop and are clearly discernible if a subsequent inspection is required during the crop year (appraisal, claim for indemnity, APH review, etc.).

Producers using precision farming technology, identifying the boundaries (between the IRR and NI acreage of the center pivot) and GPS yield monitors that document the production separately, are considered to meet the discernible break requirements between the IRR and NI acreage.

EU unit structure must be reported on the acreage report.

**A. Separate Record Requirements**

Each BU must be designated separately on the acreage report. Separate production reports must be provided for APH purposes for each crop by P/T/TMA in the EU.

Separate records of acreage and production for BUs/OUs must be maintained to change unit structure from EUs to BUs or OUs in any subsequent crop year.

(1) For BUs, to be eligible to use records to establish the production guarantee for the BU, production reports must be provided for each BU by P/T/TMA. If production reports are not provided for each BU, none of the production reports are acceptable for APH purposes.

(2) For OUs, to qualify for OUs and to be eligible to use the records to establish the production guarantee for all OUs, production reports must be provided for each OU by P/T/TMA. If production reports are not provided for each OU, none of the production reports are acceptable for APH purposes.

**B. Maintaining APH databases below the EU level**

The following are instructions for maintaining an APH database below the EU level.

(1) APH databases below the EU level must be maintained by the AIP when separate P/T/TMAs are contained on the actuarial documents.

(2) APH databases below the EU level (at BU or OU level) must be established and maintained by the AIP when:

(a) the insured provides separate production reports for acreage that would qualify for separate OUs by crop/P/T/TMA. APH databases below the OU for crop/P/T/TMA level may only be maintained by the AIP if the criteria in Para.1505 are met.

(b) once APH databases below the EU level are established, they must be maintained and the AIP must submit the APH databases to RMA electronically. The approved APH yield reported on the acreage report must match the corresponding APH database within the EU (e.g., same section).

(3) If the insured does not provide a production report on the basis of APH databases below the EU level or if production is commingled between the APH databases below the EU level, the AIP shall prorate the production and acreage to APH databases with planted acres when APH databases below the EU level exist. Identify actual prorated production with the "PA" yield descriptor.

**B. Maintaining APH databases below the EU level (continued)**

(4) Any liability, premium and indemnity payments will be based on the EU structure, regardless of any APH databases that may be established below the EU level.

**C. EU Acreage Report Requirement**

Each section or other basis used to qualify for an EU must be separately designated by BU on the acreage report.

**D. Qualification Determination**

Qualification for the EU will be determined at acreage reporting time when the insured reports all insurable acreage of the insured crop in the county for all BUs and/or OUs comprising the EU.

**E. Prorating Production**

If an insured has only provided production reports for total acres and total production on an EU basis and APH databases have not been maintained at the BU level, production will be prorated for each BU for planted acres in accordance with Para. 1087C to determine the approved APH yield when BUs are assigned up until payment of a claim.

## 1035 Discounts

Only planted acres are used when determining the appropriate EU discount factor contained in the actuarial documents. Any applicable EU discount factor applies to planted and PP acres, if applicable, in the EU when determining premium.

## 1036 Added Land and New Crop P/T

For land added to an EU or APH databases established for a new crop/P/T, use a simple average of the approved APH yields for the applicable underlying units of the EU as the SA T-Yield when the added land (or existing land in the case of new crop/P/T) is comparable in productivity; otherwise, use the variable T-Yield for any APH databases established for the added land. See Part 17 Section 9.

## 1037 Assigned Unit Structure

(1) If the insured does not qualify for an EU by crop/county, a unit structure will be assigned. If this determination is made:

(a) on or before the ARD, the unit division will be based upon BUs or OUs, whichever is reported on the acreage report and for which the insured qualifies, if the production reporting requirements are met by the PRD.

(b) after the ARD, a BU structure will apply.

(2) If the insured does not qualify for separate EUs by irrigated and non-irrigated practices (when elected) and this determination is made (see Exh. 10E):

(a) on or before the ARD, the insured may elect the unit structure of:

(i) one EU for both irrigation practices on a crop/county basis, provided the requirements in Para. 1033 are met; or

(ii) BUs or OUs for both irrigation practices, whichever is reported on the acreage report and for which the insured qualifies, if the production reporting requirements are met by the PRD; or

(b) after the ARD, the unit structure will be one EU for both irrigation practices on a crop/county basis provided the requirements in Para. 1033 are met. If the requirements for an EU is not met, a BU structure will apply to both irrigation practices.

(3) If the insured does not qualify for an EU on one irrigation practice (irrigated or non-irrigated) when they elect to insure one of the irrigation practices as an EU and a different unit structure on the other irrigation practice and this determination is made (see Exh. 10F):

(a) on or before the ARD, the unit division for both irrigation practices will be based upon BUs or OUs, whichever is reported on the acreage report and for which the insured qualifies, if the production reporting requirements are met by the PRD.

(b) after the ARD, a BU structure will apply to both irrigation practices.

**1038 Assigned Yields**

Assigned yields and related procedures will apply if production reporting provisions are not complied with for an EU. If the insured certifies production on the production report at a level below the EU, they must have acceptable records at the level reported or assigned yields will apply (see Para. 1303A for additional details). See Para. 1306 and 1503B for assigned yield and related procedures. However, assigned yields do not apply if the insured provided an acceptable production report on an EU basis and BUs are subsequently assigned.

**1039 Cups**

Cups do not apply if APH databases are combined or divided when switching from BUs or OUs to an EU.

**1040-1044 (Reserved)**

## 1045 Availability

A WU consists of all insurable acreage of all insured crops planted in the county in which the insured has a share on the date coverage begins for each crop for the crop year and for which the WU structure is available. WUs may not be further divided, except as specified in this procedure.

WUs are only available for additional coverage policies for:

(1) crops with revenue protection available, only if revenue protection is elected, or
(2) crops without revenue protection, only if allowed by the SP.

## 1046 WU Election

WU must be elected by the insured, in writing, on an application or policy change on or before the earliest SCD for the insured crop(s) and county insured and unit structure must be reported on the acreage report.

(1) For counties with a fall/winter SCD and a spring SCD, the WU election may be changed on or before the earliest spring SCD for crops in the unit, if there is not any insured fall/winter planted acreage of the insured crop.

(2) The WU election is continuous and remains in effect from year to year unless cancelled in writing by the insured by the earliest cancellation date for the crop years.

If the insured has a WU in effect and does not qualify for the current crop year, the election will continue to apply in subsequent crop years. See Para.1047.

## 1047 WU Qualifications

To qualify for a WU, all of the following apply.

### A. All Eligible Crops Must Be Insured

All insured crops eligible for WUs must be insured:

(1) under revenue protection (if the Harvest Price Exclusion is elected for any crop, it must be elected for all crops in the WU), unless the SP allow WU for another plan of insurance and all crops are insured under such a plan;

Any insured crop with WUs available under the SP (even if revenue protection is not available) must also be included in the WU.

**A. All Eligible Crops Must Be Insured (continued)**

**Example:** If the insured plants corn and soybeans for which revenue protection has been elected and the insured plants canola for which yield protection was elected (revenue protection is available), the corn, soybeans and canola do not qualify for WU and would be assigned separate BUs unless production reports were filed on an OU basis and ARD has not passed

(2) with the same AIP; and

**Example:** If corn and canola are insured with an AIP and soybeans are insured with a different AIP, the corn, soybeans and canola do not qualify for WU and would be assigned separate BUs

(3) at the same coverage level.

**Example:** If corn and canola are insured at the 65 percent coverage level and soybeans are insured at the 75 percent coverage level; the corn, soybeans and canola do not qualify for WU and would be assigned separate BUs.

**Exception:** An insured can elect one coverage level for all irrigated practices and a different coverage level for all non-irrigated practices for all crops within the WU in accordance with the requirements in GSH Para. 836 A(2). For example, if all irrigated practices for corn are insured at the 65 percent coverage level, all irrigated canola practices must be insured at the 65 percent coverage level. If all non-irrigated practices for corn are insured at the 70 percent coverage level, all the non-irrigated practices for canola must be insured at the 70 percent coverage level. If all irrigated corn practices are insured at the 65 percent coverage level and all irrigated practices for canola are insured at the 70 percent coverage level, the unit structure will be assigned in accordance with Para. 1050.

**B. Must Contain Two Crops and 10 Percent or More of Planted Acreage**

The WU must contain all of the insurable acreage of at least two crops.

At least two of the insured crops must each have planted acreage that constitutes 10 percent or more of the total planted acreage liability of all insured crops in the WU. (For crops for which revenue protection is available, liability will be based on the applicable projected price only for the purpose of this paragraph).

**1048 Separate Administrative Fees**

The insured is required to pay the separate administrative fees for each crop included in the WU.

## A. Acreage Report

Each BU for each crop in the WU must be designated separately on the acreage report.

## B. Production Report

Separate production reports must be provided for APH purposes for each crop by P/T/TMA for the WU. To change unit structure from a WU to BU or OUs in any subsequent crop year, separate records of acreage and production for each crop must be maintained by P/T/TMA by the following.

(1) For each BU, to be eligible to use such records to establish the approved APH yield or amount of insurance for the BUs.

(2) For OUs, to qualify for OUs and to be eligible to use such records to establish the approved APH yield or amount of insurance for the OUs.

(3) If an insured has only provided production reports for total acres and total production by crop on a WU basis and APH databases have not been maintained at the BU level, production will be prorated for each BU based upon planted acres in accordance with Para. 1087C to determine the approved APH yield when BUs are assigned up until payment of a claim.

## C. Maintaining APH databases below the WU level

The following instructions apply when maintaining an APH database below the WU level.

(1) APH databases below the WU level must be maintained by the AIP when separate P/T/TMA are contained on the actuarial documents.

(2) APH databases below the WU level (at BU, OU, or EU level) must be established and/or maintained by the AIP when:

(a) the insured provides separate production reports for acreage that would qualify for separate OUs by crop/P/T/TMA.

APH databases below the OU for crop/P/T/TMA level may only be maintained by the AIP if the criteria in Para. 1505 are met;

(b) APH databases below the WU level are established, they must be maintained and the AIP must submit the APH databases to RMA electronically. The approved APH yield reported on the acreage report must match the corresponding APH database within the WU (e.g., same section).

**C. Maintaining APH databases below the WU level (continued)**

(3) If the insured does not provide a production report on the basis of APH databases below the WU level or if production is commingled between the APH databases below the WU level, the AIP shall prorate the production and acreage to APH databases with planted acres when APH databases below the WU level exist. Identify actual prorated production with the "PA" yield descriptor.

(4) Any liability, premium and indemnity payments will be based on the WU structure, regardless of any APH databases that may be established below that level.

## 1050 Unit Structure Assignment

If the insured does not qualify for a WU for at least one insured crop, even when revenue protection was elected for all crops and the insured does not meet all of the other requirements in Para. 1047:

(1) on or before the ARD, the unit division for all crops for which a WU was elected, will be based on BU or OUs (provided the production reporting requirements are met by the PRD), whichever is reported on the acreage report and for which the insured qualifies; or

(2) at any time after the ARD, a BU structure will be assigned for all crops for which a WU was elected.

If it is not possible to establish a projected price for at least one of the insured's crops, the unit structure will:

(1) be based on the unit structure reported on the acreage report; and

(2) qualify for only the crop for which a projected price could not be established, unless the remaining crops in the unit would no longer qualify for a WU. In such case, the unit division for the remaining crops will be based on the unit structure reported on the acreage report for which the insured qualifies.

## 1051-1060 (Reserved)

## Section 5 Unit Numbering

### 1061 General Information

The unit number is assigned by the AIP and identifies the unit. The unit number consists of an eight-position number and a two-position alpha-character field to designate unit structure. See Exh. 10 for unit numbering examples.

### 1062 The Structure Code

The unit structure code is a two-position alpha character field to designate the unit structure for which the insured elects and qualifies.

**Exception:** When an insured elects and qualifies for OUs, unit numbers may be coded with the OU (including UD or UA if OU established by UDO or WUA) or BU structure code.

A unit number is coded with the BU structure code if an insured elects and qualifies for OUs, and a BU is not further divided into OUs or only one OU (including UD or UA if OU established by UDO or WUA) within a BU, that contains multiple OUs, is planted.

The Unit Structure Code will not be required on the production report or APH database. However, the Unit Structure Code must be reported on the acreage report.

Applicable Unit Structure Codes include:

(1) BU – Basic Unit;
(2) OU – Optional Unit;
(3) EU – Enterprise Unit;
(4) EP – Enterprise Unit by Irrigated and/or Non-Irrigated Practices;
(5) WU – Whole-farm Unit;
(6) UD – OU established by UDO; and
(7) UA – OU established by a WUA.

### 1063 Unit Number

The unit number is an eight-position number divided into two separate fields. The unit structure code will identify the unit structure, not the unit number. For example, an insured elects an EU and reports acreage and production on an OU or BU basis, an AIP must assign unit numbers on the basis the APH database is established and the unit structure code (EU) will designate the unit structure.

The first four digits are the BU number and may be any number between 0001-9999. However, BUs for an insured should start with 0001, if possible. The last four digits are the OU number and may be any number between 0000-9999.

**Example 1:** An insured elects OUs and has two OUs within one BU. The unit numbers are:

(1) 0001-0001OU; and
(2) 0001-0002OU.

**Example 2:** Same scenario as the previous example, but in the subsequent year, the insured elects BUs, no other changes. The unit number does not change, only the unit structure code (OU changed to BU) changes:

(1) 0001-0001BU; and
(2) 0001-0002BU.

**Example 3:** An insured has three BUs and elects OUs: the first BU has two planted OUs, the second BU contains multiple OUs but only one OU is planted in the current crop year, and the third BU is not further divided into OUs. The unit numbers are:

(1) 0001-0001OU;
(2) 0001-0002OU;
(3) 0002-0001BU; and
(4) 0003-0000BU.

The following examples demonstrate an insured with different share arrangements, who elects an EU, is able to report production by OUs, BUs, or EU.

**Example 1:** An insured with different share arrangements and an OU APH database structure elects an EU for the current crop year. The unit numbers are:

(1) 0001-0001EU, owns (100%) share, section 3;
(2) 0001-0002EU, cash rents (100% share) from landowner A, section 5;
(3) 0001-0003EU, owns (100% share) section 19;
(4) 0002-0001EU, 60% share with landowner B, section 2;
(5) 0002-0002EU, 60% share with landowner B, section 3;
(6) 0002-0003EU, 60% share with landowner B, section 7;
(7) 0003-0001EU, 60% share with landowner C, section 2;
(8) 0003-0002EU, 60% share with landowner C, section 5; and
(9) 0003-0003EU. 60% share with landowner C, section 33.

**Example 2:** An insured with different share arrangements and a BU APH database structure elects an EU for the current crop year. The unit numbers are:

(1) 0001-0000EU, 100% share: owns/cash rent landowner A;
(2) 0002-0000EU, 60% share with landowner B; and
(3) 0003-0000EU, 60% share with landowner C.

**Example 3:** An insured without underlying BU or OU APH databases and an EU structure. The unit number is:

0001-0000EU, all insurable acreage of the crop in the county.

The following examples demonstrate an insured who has different share arrangements, elects EP unit structure for all irrigated and non-irrigated practices (i.e., one separate EU for irrigated and one separate EU for non-irrigated practices) and is able to report production by OUs, BUs, or EU. The examples assume the insured has irrigated and non-irrigated land in each section and irrigated and non-irrigated practice/types are the same for all the land.

**Example 1:** An insured with different share arrangements and an OU APH database structure elects EP unit structure for all irrigated and non-irrigated practices for the current crop year.

The unit numbers for the irrigated EU are:

(1) 0001-0001EP, owns (100%) share, section 3;
(2) 0001-0002EP, cash rents (100% share) from landowner A, section 5;
(3) 0001-0003EP, owns (100% share) section 19;
(4) 0002-0001EP, 60% share with landowner B, section 2;
(5) 0002-0002EP, 60% share with landowner B, section 3;
(6) 0002-0003EP, 60% share with landowner B, section 7;
(7) 0003-0001EP, 60% share with landowner C, section 2;
(8) 0003-0002EP, 60% share with landowner C, section 5; and
(9) 0003-0003EP. 60% share with landowner C, section 33.

The unit numbers for the non-irrigated EU are:

(1) 0001-0001EP, owns (100%) share, section 3;
(2) 0001-0002EP, cash rents (100% share) from landowner A, section 5;
(3) 0001-0003EP, owns (100% share) section 19;
(4) 0002-0001EP, 60% share with landowner B, section 2;
(5) 0002-0002EP, 60% share with landowner B, section 3;
(6) 0002-0003EP, 60% share with landowner B, section 7;
(7) 0003-0001EP, 60% share with landowner C, section 2;
(8) 0003-0002EP, 60% share with landowner C, section 5; and
(9) 0003-0003EP. 60% share with landowner C, section 33.

**Example 2:** An insured with different share arrangements and a BU APH database structure elects EP unit structure for all irrigated and non-irrigated practices for the current crop year.

The unit numbers for the irrigated EU are:

(1) 0001-0000EP, 100% share: owns/cash rent landowner A;
(2) 0002-0000EP, 60% share with landowner B; and
(3) 0003-0000EP, 60% share with landowner C.

The unit numbers for the non-irrigated EU are:

(1) 0001-0000EP, 100% share: owns/cash rent landowner A;
(2) 0002-0000EP, 60% share with landowner B; and
(3) 0003-0000EP, 60% share with landowner C.

**Example 3:** An insured without underlying BU or OU APH databases elects EP unit structure for all irrigated and non-irrigated practices.

The unit number for the irrigated EU is:

0001-0000EP, all insurable irrigated acreage of the crop in the county.

The unit number for the non-irrigated EU is:

0001-0000EP, all insurable non-irrigated acreage of the crop in the county.

The following examples demonstrate an insured who has different share arrangements, elects EP unit structure for all irrigated practices and BUs or OUs for all non-irrigated practices. The insured is able to report production for both irrigation practices by BUs or OUs. The examples assume the insured has irrigated and non-irrigated land in each section and irrigated and non-irrigated practice/types are the same for all the land.

**Example 1:** An insured with different share arrangements and an OU APH database structure elects EP unit structure for irrigated practice and OUs for non-irrigated practice for the current crop year.

The unit numbers for the irrigated EU are:

(1) 0001-0001EP, owns (100%) share, section 3;
(2) 0001-0002EP, cash rents (100% share) from landowner A, section 5;
(3) 0001-0003EP, owns (100% share) section 19;
(4) 0002-0001EP, 60% share with landowner B, section 2;
(5) 0002-0002EP, 60% share with landowner B, section 3;
(6) 0002-0003EP, 60% share with landowner B, section 7;
(7) 0003-0001EP, 60% share with landowner C, section 2;
(8) 0003-0002EP, 60% share with landowner C, section 5; and
(9) 0003-0003EP. 60% share with landowner C, section 33.

The unit numbers for the non-irrigated OUs are:

(1) 0001-0001OU, owns (100%) share, section 3;
(2) 0001-0002OU, cash rents (100% share) from landowner A, section 5;
(3) 0001-0003OU, owns (100% share) section 19;
(4) 0002-0001OU, 60% share with landowner B, section 2;
(5) 0002-0002OU, 60% share with landowner B, section 3;
(6) 0002-0003OU, 60% share with landowner B, section 7;
(7) 0003-0001OU, 60% share with landowner C, section 2;

(8) 0003-0002OU, 60% share with landowner C, section 5; and
(9) 0003-0003OU. 60% share with landowner C, section 33.

**Example 2:** An insured with different share arrangements and a BU APH database structure elects EP unit structure for irrigated practice and BUs for non-irrigated practice for the current crop year.

The unit numbers for the irrigated EU are:

(1) 0001-0000EP, 100% share: owns/cash rent landowner A;
(2) 0002-0000EP, 60% share with landowner B; and
(3) 0003-0000EP, 60% share with landowner C.

The unit numbers for the non-irrigated BUs are:

(1) 0001-0000BU, 100% share: owns/cash rent landowner A;
(2) 0002-0000BU, 60% share with landowner B; and
(3) 0003-0000BU, 60% share with landowner C.

## 1064 Unit Numbering Constancy

The unit number for a particular unit should remain the same from year to year to the extent possible, even when a policy transfers to a different AIP.

Unit numbers do not change when a different unit structure is elected (i.e., an insured with OUs elects EUs); the two-character unit structure code indicates unit election qualification. AIPs may change unit numbers due to unit combination/division.

### A. Numbering When Units are Combined

When units are combined, unit numbering should be handled as follows:

(1) When BUs are combined, the unit number for the resulting BU should be the lowest unit number of the BUs which were combined. The first set of four characters of the combined unit designate the BU (0001).

(2) When OUs are combined, the unit number of the resulting OU should be the lowest unit number of the OUs which were combined. The second set of four characters designate the OUs.

**Example:** Original units are 0001-0001OU, 0001-0002OU, and 0001-0003OU. If 0001-0001OU and 0001-0002OU are combined due to commingled production, the revised acreage report and unit numbers would be 0001-0001OU and 0001-0003OU.

**B. Numbering When Units are Divided**

(1) When BU(s) are divided, the unit numbers for the resulting BUs will be the original unit number and the lowest next available BU number.

(2) When BU(s) are divided into OUs, the unit numbers for the resulting OUs will be the lowest available OU numbers for that BU.

(3) When OUs are divided, the unit numbers of the resulting OU will be the original unit number and the lowest next available OU number.

**Example:** Original unit is 0001-0001OU. If 0001-0001OU is divided, the resulting unit numbers will be 0001-0001 and 0001-0002OU (if 0001-0002 is not already in use).

## 1065 Unit Number Consistency

When possible, unit numbers should correspond for each crop as much as possible (i.e., wheat unit 0001-0001 should match with the location of the corn unit 0001-0001).

## 1066 Master Yield Summary APH Database

Unit number is 0000-0000 with no unit structure code. Yield indicator is "M". See Part 17 Section 7 for more information concerning Master Yields.

## 1067-1072 (Reserved)

## 1073 Provisions

### A. Sections

In regards to unit structure, a section is a unit of measure under a rectangular survey system describing a tract of land usually one mile square and usually containing approximately 640 acres.

### B. Section Equivalents

In some areas of some states (e.g., Illinois, Indiana, Louisiana, New Mexico, Ohio and Texas), other methods of measure (i.e., Spanish grants, railroad surveys, leagues, labors, Virginia Military Lands etc.) are employed. If these units of measure are legally identified and consist of at least 640 acres, they will be considered a section equivalent.

**Example:**

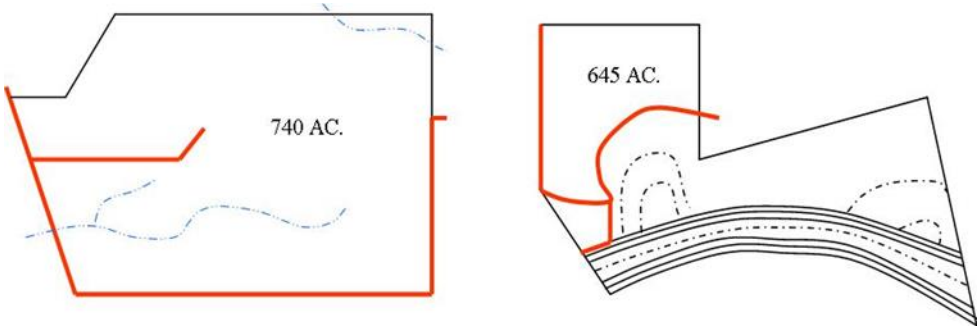


### C. FSA Farm Numbers

FSA assigns a FSA FN to farms owned or operated by a person.

### D. Order of Precedence

The order of precedence to determine whether sections, section equivalents, or FSA FNs are used to determine OUs is:

(1) Section;
(2) Section equivalent containing at least 640 acres; and
(3) FSA FNs in the absence of section descriptions or section equivalents.

Assume that for each survey identified, the insured has kept separate, acceptable records of acreage and production, the survey boundaries are clearly visible, and that the planting pattern does not cross the survey boundaries.

For Sections, Section Equivalents, and FSA FNs:

**D. Order of Precedence (Continued)**

**Example:** The County is primarily surveyed in sections usually one-mile square containing approximately 640 acres. However, some of the land is surveyed using methods other than sections.

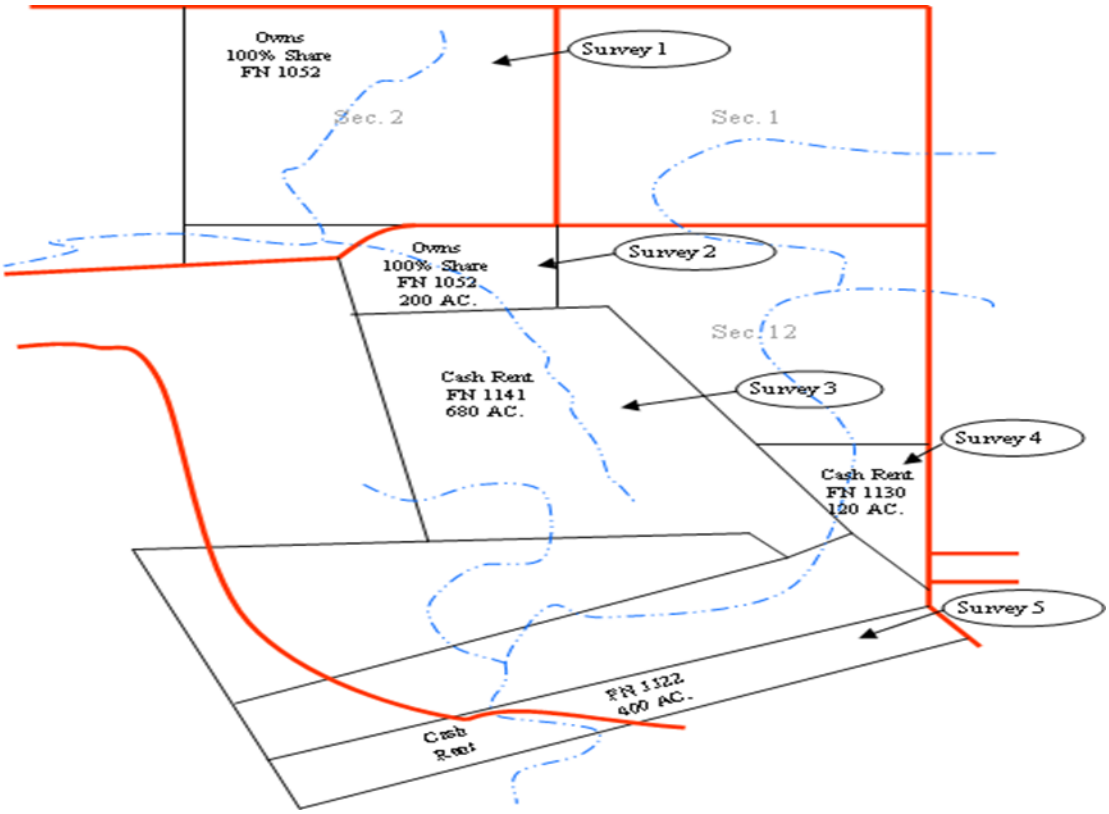


Units are determined by order of precedence:

(1) Survey #1 is a separate OU (section) – 0001-0001;

(2) Survey #3 is a separate OU (section equivalent survey containing at least 640 acres) – 0001-0002; and

(3) Survey #2, #4 and #5 are each FSA FN OUs (FSA FN units in the absence of section and section equivalent descriptions) – 0001-0003, 0001-0004 and 0001-0005.

**D. Order of Precedence (Continued)**

**For Spanish Land Grant**

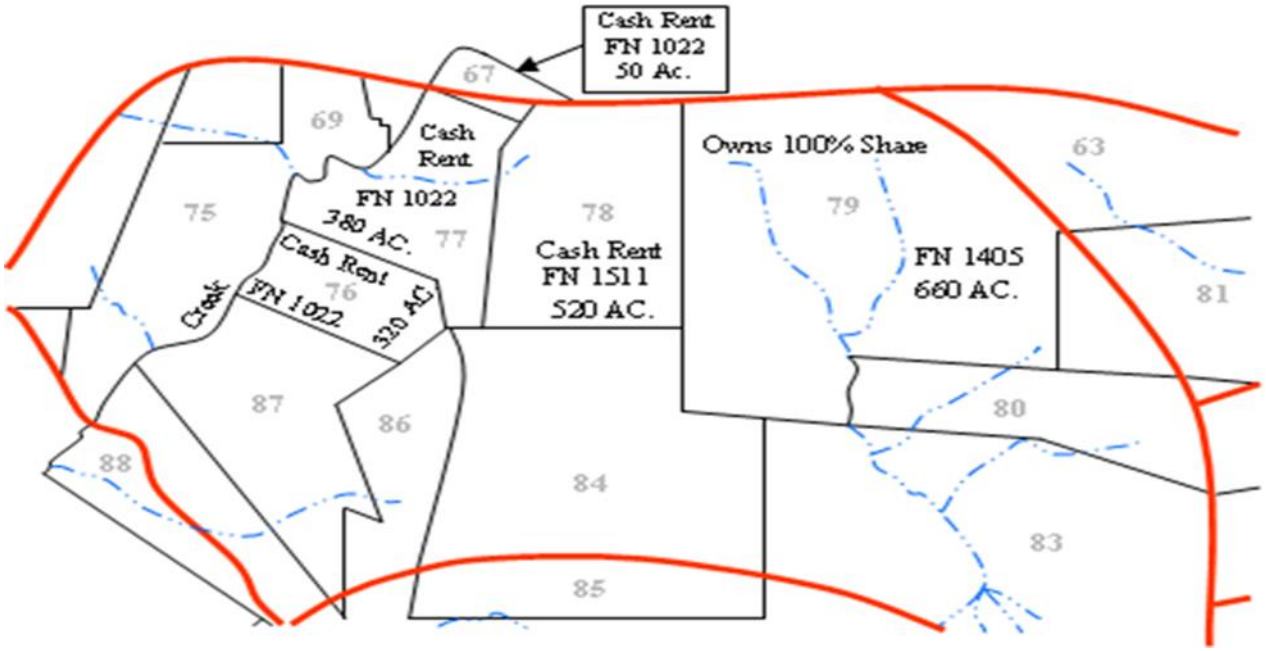


Units are determined by order of precedence:

(1) Survey #79 is a separate OU (section equivalent) – 0001-0001;

(2) Survey #78 is an OU (FSA FN unit in absence of section equivalent description) – 0001-0002; and

(3) Surveys #'s 67, 76, and 77 is one OU (FSA FN unit in absence of section equivalent descriptions because each survey contains less than 640 acres and is a single FSA FN.) – 0001-0003.

**1074 Unit Division Option – Illinois, Indiana, Ohio, and Texas**

In areas of Illinois, Indiana, Ohio, and Texas not surveyed under the U.S. Rectangular Survey System or similar surveys allowing for sections or "section equivalents"; see Para. 1073, insureds may request the UDO to aggregate two or more, (any shape) contiguous legally identifiable parcels of land into "section equivalents" for OU division purposes in lieu of FSA FNs. Legally identifiable means the parcel has a legal description that is recognized by a governmental office (i.e., appraiser, auditor, land office, county, state, etc.). Units must first be established by section and section equivalents according to order of precedence. The insured may not establish OUs by FSA FNs when UDO is applicable for the county.

For the purpose of this option, if a survey is required to identify the parcels of land, the parcels are not legally identified. Units cannot be separated by a physical boundary (i.e., road, creek, drainage ditch, fence, etc.) or CLU which is not identified by a legal survey.

### A. OUs for the Proposed Aggregation

To qualify for OUs for the proposed aggregation, the insured must comply with the production reporting, recordkeeping, and planting pattern guidelines specified in the applicable crop policy or actuarial documents.

### B. Policies with More than One AIP

If the insured has policies with more than one AIP, the insured must decide which AIP to work with to develop the UDO aggregate and then provide the other AIP(s) copies of the UDO on or before the ARD.

### C. Establish the Same Aggregated OUs

The insured must establish the same aggregated OUs for all crops insured by all AIPs. The purpose of the option is to provide aggregated OUs on the same basis as those determined by section under the Rectangular Survey System.

(1) If it is discovered that the insured has more than one UDO, the one with the earliest signature date will apply.

(2) If the insured does not have acreage and production records or does not file required production to support the aggregated OUs, the insured will be limited to BUs for the crop(s). See Para 1024B for exceptions.

(3) Bona fide landlord and tenant arrangements (companion policies) are not required to have the same aggregated OUs. If a landlord and a tenant have different aggregated OUs, each entity or policy will have its own approved APH yield and unit arrangement.

### D. Continuous Option

The option is a continuous option and applies (until canceled) to any crop for which OUs are chosen. Written documentation must be completed on the UDO by the applicable ARD and retained by the AIP. The option may be canceled by the insured or AIP for any succeeding crop year by giving written notice on or before the cancellation date. A UDO does not automatically transfer when an insured transfers a policy to a different AIP; the UDO must be requested by the insured and verified by the new AIP.

(1) If the insured chooses OUs for any crop(s), the aggregated OUs established on the option apply to all insured crop(s) permitted OUs by section.

(2) OUs not elected. If the insured does not want OUs for a crop(s), the option is not effective for that crop(s).

**D. Continuous Option (continued)**

(3) All parcels of the aggregated OU MUST be legally identified by number or name of each parcel (donation, section, labor, block, tract, etc.), and identified on the option.

(4) All parcels of land in an aggregated OU must be contiguous (lie adjacent to each other). It is not required that the aggregated OU be of a rectangular shape. Aggregated acreage may or may not be classified as cropland.

(5) Ownership or control of all land in the aggregate by the insured is not required.

(6) If the insured starts farming additional land that was not included in any of the aggregated OUs, the added land may be:

(a) Added to an existing aggregated OU, or
(b) Combined with other non-aggregated land to form its own aggregated OU.

The additional or added land must be contiguous as stated in (a) and (b) above.

**E. OUs**

OUs determined by sections or "Section equivalents" (single parcels containing at least 640 acres) are not required to be entered on the option.

**F. Agents Will Prepare the Option**

Agents will prepare a UDO and forward it to the AIP for approval. If the agent needs assistance in preparing the option, the AIP/RO will provide the assistance.

**1075-1080 (Reserved)**

## Section 7 Combining and Dividing BUs, OUs, EUs, and WUs

### 1081 General Information

This section provides instructions of establishing and maintaining APH databases when a carryover insured with approved APH yield history combines or divides existing APH databases.

These instructions apply to both Category B and C crops unless otherwise specified. Separate instructions are provided in Part 15 Section 2 for retaining previously reported acreage and production history when P/T/TMAs change on the actuarial documents.

The following instructions are for structuring APH databases when:

(1) BUs change due to a change in the BU definition in the crop's policy;
(2) BUs change due to a change in shares;
(3) OUs are combined;
(4) EUs (including EPs), WUs, or BUs are divided into OUs; or
(5) EUs (including EPs) or WUs are divided into BUs; or
(6) OUs are further divided into additional OUs.

These instructions apply separately for each insured person, by crop and unit; however, APH databases within a unit are required for each P/T and other situations such as TMA, high-risk land, and may be required for added land and Category C crop APH databases.

Cups do not apply when APH databases with actual/assigned yields from more than one unit or block (Category C) are combined or the APH database from a unit or block is divided into the additional APH databases. See Para. 1874.

Previous yield history must be updated according to these instructions based on the insured's unit structure for the current crop year.

### 1082 Establishing Separate APH Databases

When insureds provide separate production reports for acreage that would qualify for separate OUs but elect to insure on an EU or BU basis (e.g., wants the BU discount instead of OUs, has CAT coverage, or maintains APH databases on an OU basis when electing an EU), AIP must establish separate APH databases for OUs within an EU or BU.

For new CAT insureds, verifiers must establish separate APH databases (corresponding to OUs available to the crop at the additional coverage level) within an EU or BU, provided the insured filed acceptable production reports in that manner.

However, it is the AIP's responsibility to inform the insured of the correct unit structure. Refer to Para. 1083 for procedures for maintaining separate OU APH databases for these situations. Separate line entries are required on the acreage report for each APH database with planted insurable acreage.

### A. Impact of Failure to Provide an Acceptable Production Report

Failure to provide acceptable production reports for the most recent APH crop year will not cause OU APH databases to be combined. Separate APH databases will continue to be maintained for the OUs. However, assigned yields will apply and the insured will not be eligible for OUs for the current crop year.

### B. Impact of Commingled OU Production

If production from OUs is commingled (including at the time of loss), separate APH databases must be maintained for the current and subsequent crop years as indicated in Para. 1083 unless the Agreement to Combine OUs is authorized see Para. 1085.

## 1083 Maintaining Separate APH Databases Within BUs, EUs, or WUs

APH databases previously established for OUs that continue to meet the crop's OU requirements under Para. 1082 or 1084E must be maintained separately unless, the insured can justify and adequately document that the acreage will no longer be farmed separately and OUs are combined according to Para. 1085.

**Example:** An insured had additional coverage and elects CAT coverage or elects BUs, EUs or WUs and the previous APH yield history is on an OU basis. The verifier must continue to maintain separate OU APH databases within the BU, EU, or WU unless the OUs are combined.

### A. APH Databases Maintained Separately

When APH databases are maintained separately, the yield history from all units that contain actual and/or assigned yields will be entered in the appropriate current (policy) crop year APH database. However, insureds must file separate reports of acreage and production for the most recent APH crop year to qualify for OUs.

### B. Commingled OU Production

If production from OUs is commingled in subsequent crop years, the production will be prorated to APH databases with planted acreage. Identify prorated actual production with the "PA" yield descriptor.

### C. Acceptable Production Reports

If acceptable production reports not provided, assigned yields will apply to APH databases with planted acreage (except where claims are applicable).

For Category B Crops, if the insured chooses to combine the APH databases, the AIP must agree in writing to combine the acreage and production history; see Para. 1085.

### D. Acreage and Production History Maintained Separately

When the acreage and production history must be maintained separately, use the following.

**Step 1** Change the BU/EU/WU to reflect the current year's unit structure and for data tracking purposes assign a yield record number (record) to each previously established OU APH database see Appendix III.

**Step 2** Complete the most recent year in the APH database by using the current year's production report(s).

(1) If acceptable production reports are not filed, and insurable acreage was planted the previous (policy) crop year, use assigned yields (by P/T/TMA) for APH databases with planted acres.

(2) If the production was commingled, prorate the production to APH databases with planted acres (divide the total production by the total acres and then prorate it to each APH database with planted acres by multiplying the average yield times the planted acreage see Exh. 10). Identify the prorated actual production with the yield descriptor "PA" prior to the actual yield descriptor.

(3) For APH databases with no acres planted, enter a "Z" yield descriptor if sufficient space in the APH database.

**Step 3** If T-Yields are required to complete four-year APH databases, the applicable T-Yield for each individual APH database will be used. Calculate the approved APH yield using the applicable Category B or C procedures for each APH database.

## 1084 Situations that Require Combining and Dividing APH Databases

The following situations require combining or dividing APH databases.

### A. The BU Definition Changes

The crop policy's BU definition changes and two or more BUs must either be combined into one BU or a BU must be divided into more than one BU.

### B. A BU Structure is Assigned

A BU structure is assigned and APH databases were not previously established at a BU level. A BU structure is assigned when it is discovered that an insured does not qualify for an EU or WU. If an insured has only provided production reports for total acres and total production on an EU basis and APH databases have not been maintained at the BU level, production will be prorated for each BU based on planted acres in accordance with Para. 1087C to determine the approved APH yield when BUs are assigned.

### C. BU Change Due to Share Arrangement

BUs change due to a change in the share arrangement and either:

(1) two or more BUs must be combined into one BU (e.g., the insured bought or cash leased acreage that was previously share rented and has other 100 percent acreage and the acreage does not meet the crop's policy requirements for OUs), or

(2) a BU must be divided into more than one BU (e.g., the insured share rented acreage that was previously cash rented and it still has a 100 percent share in the insured crop on some of the acreage that was contained in the database).

### D. Unit Change Due to Reconstituted FSA FN

Units that are by FSA FN and FSA FNs are reconstituted. The yield history in the APH database from BUs or OUs established by FSA FN must be combined if more than one FSA FN is reconstituted into a single FSA FN by the PRD. The production history from a BU must be divided if a single FSA FN is reconstituted into more than one FSA FN by the PRD. If reconstituted after the PRD, the APH databases will be changed the following crop year.

### E. OU Division

Units are divided into OUs. APH database yield history is divided when EUs, WUs, or BUs are divided into OUs or OUs are further divided into additional OUs.

## 1085 Agreements to Combine OUs for Category B Crops

Agreements should only be used by insureds that have established separate APH databases for OUs that adjoin or has added land that qualifies as a separate OU that adjoins another OU and the insured does not or will not want the acreage divided into separate OUs.

This Agreement must not be used to combine OU APH databases for added land that must be maintained separately according to the added land rules see Part 17 Section 9. APH databases established for OUs that meet the crop's OU policy requirements must be maintained separately, unless an insured requests to combine in accordance with the Agreement and the AIP approves the Agreement.

Combining OU APH databases (that are not required to be maintained separately by other procedures) that meet the crop's policy provisions for separate OUs is restricted for APH purposes to the following.

## 1085 Agreements to Combine OUs for Category B Crops

### A. OUs Combined from the Same BU

The combined OUs must be from the same BU and the acreage must be physically located in the same county and in separate sections, section equivalents or FSA FNs whichever applies. The Agreement may not be used to combine OU APH databases for different P/T/TMA.

### B. Combined OUs Must Be Adjoined

The sections, section equivalents, or FSA FNs containing the OUs being combined must lie next to or be in contact with each other (section, section equivalents, or FSA FNs whose corners touch will be considered adjoining) and the insured must provide:

(1) accurate legal descriptions of the units to be combined and if OUs are determined by FSA FNs, the legal descriptions of the FSA FNs that are being combined and;

(2) a copy of a recent aerial photo or map with the sections, section equivalents or FSA FNs that contain the OUs being combined clearly identified (delineated) that demonstrates they adjoin.

### C. Signature and Acceptance

Insureds must accurately complete and sign the Agreement on or before the PRD and designate the crops to which it will apply. Agreements are subject to AIP approval.

AIPs may approve Agreements to combine the acreage and production from OU databases after verifying that the information provided by the insured meets all the underwriting requirements. Once approved by the AIP, the Agreement is continuous and becomes an official document that must be retained by the AIP.

The AIP must provide the insured a copy of the Agreement that indicates whether the Agreement was approved. The Agreement remains in force if the insured changes from yield protection to revenue protection or vice versa.

### D. Transfer of Agreements

The Agreement transfers when the crop's policy is transferred to another agent or AIP. Insureds are not allowed to divide the combined units back into OUs by transferring or by cancelling and rewriting a policy for the same crop year.

If the crop's policy is transferred to another AIP the ceding AIP must transfer the Agreement (provide a copy of the required underwriting information) to the assuming AIP.

### E. Agreements are Continuous

The Agreement is continuous and may not be cancelled. However, the agreement will be void:

(1) For any unit combined under the agreement (by crop) that is no longer valid for the crop year due to a change in the BU structure or reconstitution of FSA FNs. Unaffected combined unit structures are not void.

**Example:** The Agreement for a crop covers two different units, each consisting of combined OUs. The BU structure changed for one of the combined units causing acreage contained in it to be located in two different BUs. In this example, the agreement is void only for the affected unit.

**Example:** The Agreement for a crop covers three combined share rent OUs, but the insured cash rents the same acreage for the crop year. The BU structure changed; however, the combined unit structure is unaffected and the agreement remains valid.

(2) For a crop, if the entire combined unit structure(s) for the crop are no longer valid.

**Example:** Two OUs are combined under the Agreement and become two different BUs for a crop year.

(3) If the crop's policy is cancelled, and the crop has not been insured for at least one crop year, continuity of insurance broken. If an APH based crop policy is canceled and the crop is insured under another insurance plan for at least one crop year that does not use APH to establish the guarantee, the agreement will be void if acceptable production reports are not provided that maintains continuity of APH for the period insured under the other insurance plan.

APH databases for OUs combined under the Agreement must be identified with the option code "CU" on the yield record and reported to RMA.

### F. Violation of the Agreement

When it is discovered that combined units were separated into OUs in violation of the Agreement, the AIP will:

(1) combine the acreage and production history according to the Agreement, beginning with the crop year that the combined units were separated;

(2) combine the OUs and correct the approved APH yield for the current crop year and if any indemnities were paid while the combined OUs were separated, combine the units and correct the approved APH yields for those crop years; and

**F. Violation of the Agreement (Continued)**

(3) recalculate the indemnity according to the combined units under the Agreement. If the corrected indemnity is less than the indemnity that was calculated in violation of the Agreement, collect the difference from the insured.

**G. BU Structure Changes After the Agreement is Approved**

If the BU structure changes due to a change in the insured's farming operation and the combined unit must be divided into more than one BU after the Agreement is approved, the acreage and production history must be divided and recertified for at least the most recent APH crop year according to the land (specific legal descriptions) contained in each new BU.

If the acreage and production cannot be recertified according to the new BUs, the acreage and production history is not acceptable and assigned yield provisions apply to carryover policies. See Para. 1087B for additional instructions and Para. 1086 for situations requiring combining of APH databases into a BU.

## 1086 Combining APH Databases

Any yield history of acreage from existing APH databases that do not meet the crop's policy provisions for separate OUs that make up a BU must be combined. See also Para. 1084 A, C, and E.

**Exception:** Unless the procedures provide a situation that requires separate yields, e.g., added land, high-risk land, etc.

**Example:** An insured has produced and reported the insured crop on his/her own land (100% share) for five years. For the current crop year, the insured purchased land in the same section that was previously rented for two crop years on a crop share basis. The acreage does not meet the policy requirements for separate OUs; therefore, the acreage and production history must be combined into the BU APH database.

Yield history (acreage and production) from all units (separated by P/T/TMA) being combined that contain actual and/or assigned yields, will be entered in the current (policy) crop year APH database according to the following procedure; see Exh. 10. If the insured requests combining units after the PRD, do not combine the APH databases and continue to maintain multiple line entries on the acreage report for that crop year.

**Step 1:** Complete the most recent APH crop year in the database by using the current year's production report(s).

(1) If acceptable production report(s) are not filed and insurable acreage was planted the previous (policy) crop year, use the assigned yield for units that were planted.

(2) If insurable acreage was planted on more than one unit/P/T, use a simple average of the prior approved APH yields for the applicable units, times 0.75 to calculate the assigned yield.

(3) For units that were not planted, use zero-planted procedures.

**Step 2:** Combine the total production and actual acres for each APH crop year.

(1) For APH crop years with assigned yields, multiply the insurable planted acres times the assigned yield to establish the amount of production, and calculate in the same manner as a year with actual yields.

(2) Divide the combined production by the combined acres for each APH crop year.

(3) Next, enter the combined total production, acres and average yields in the current (policy) crop year's APH database.

**Step 3**: For (policy) crop years in which no acres have been planted on any of the units (by P/T/) being combined, a "Z" is entered if the APH database contains sufficient space.

(1) A production report containing zero acres maintains continuity for production reporting purposes.

(2) If fewer than four years of actual/assigned yields have been reported, the variable T-Yield must be used to complete the four-year database (previously established SA T-Yields are NOT used).

**Step 4:** Calculate the approved APH yield using the applicable Category B or C procedure.

## 1087 Dividing APH Yield History for Category B Crops

Use these procedures if the following applies.

### A. The BU Definition Changes

If the BU definition in the CP changes and a BU must be divided into additional BUs, insureds may submit production report(s) according to the BU definition for the current (policy) crop year or as BUs were defined the previous (policy) crop year. The following crop year the production history must be submitted according to the new BU definition to be acceptable.

If acceptable production reports for the most recent APH crop year are:

**A. The BU Definition Changes (continued)**

(1) filed according to the previous BU definition:

(a) add the production history to the APH database and transfer the yield history (total production, acres, actual/assigned yields) from the prior (policy) crop year's BU APH database to the new BU APH databases that were derived from it.

(b) if less than four years of actual and/or assigned yields are available:

(i) enter the applicable variable T-Yield(s) to complete each 4-year APH database (previously established SA T-Yields are not used); and

(ii) then calculate the approved APH yields according to applicable Category B procedures.

(2) filed according to the new BU definition, enter the acreage and production data in the appropriate APH databases. Indicate zero planted acres where applicable.

(a) If the prior history is also recertified, follow the instructions in Para. 1087B; however, assigned yield provisions will not apply if actual acreage and production is submitted for years with assigned yields. Recertified production reports must be for continuous APH years.

(b) If the prior history is not recertified, transfer the yield history (total production, acres, actual/assigned yields) from the prior (policy) crop year's BU database to the new BU APH databases derived from it.

If less than four years of actual and/or assigned yields are available, enter the applicable variable T-Yield(s) to complete each 4-year APH database (previously established SA T-Yields are not used) and then calculate the approved APH yields according to applicable Category B procedures.

(3) not filed for the current crop year, enter the assigned yield in all applicable (planted acreage) APH databases. Follow the procedure in Para. 1087A for the remaining crop years in the APH databases.

**B. Farming Operations Changes**

Changes to farming operations cause BUs to be divided into additional BUs see Para. 1084C:

(1) For the current (policy) crop year, the insured must submit acceptable production reports for the most recent APH crop year according to the current year's unit arrangement. See Exh. 10.

**B. Farming Operations Changes (continued)**

(2) The insured may submit (recertify) production reports for prior APH crop years that were previously reported as one unit.

When recertifying, production reports must begin with the most recent APH crop year in the base period and work backward.

Reported acreage must include insurable planted acres and PP acreage for which yields have been assigned ("PP" and "PW" yield descriptors).

**Step 1:** Complete the most recent APH crop year in each unit's APH database using the current year's production reports.

(a) If acceptable production report(s) are not filed and insurable acreage was planted the previous (policy) crop year, use assigned yields for divided units that were planted.

(b) For units that were not planted, use zero planted procedures.

**Step 2:** If additional APH crop years that were previously reported are recertified, update the prior APH crop years using the actual production history from each unit (by P/T/TMA).

(a) For crop years that the production cannot be recertified, the insured should report acres by unit by crop year.

(b) When acres are reported by unit, but the production is commingled, prorate the commingled production to unit APH databases with planted acres by dividing the total production by the total acres and multiply the resulting average yield times the planted acres.

(i) Identify prorated actual production with the "PA" yield descriptor.

(ii) Duplicate assigned yields (identified with "P" yield descriptor) to appropriate APH databases.

(c) For crop years that are not recertified or if acres are not reported by unit, enter the total acres and production (including assigned yields) in each unit for each APH crop year.

(i) Identify duplicated actual production with the "DA" yield descriptor.

(ii) Duplicate assigned yields (identified with "P" yield descriptor) to appropriate APH databases.

**B. Farming Operations Changes (continued)**

**Step 3:** If less than four years of actual and/or assigned yields are available, enter the applicable variable T-Yield(s) to complete each 4-year APH database. Previously established SA T-Yields are not used.

**Step 4:** Calculate the approved APH yield.

**C. Dividing a WU/EU into BUs, BUs into Additional BUs, WU/EU and BUs into OUs and Further Dividing OUs (Category B Crops)**

This procedure applies the initial crop year that WU/EUs or BUs are divided into OUs or OUs are further divided into additional OUs. Although CAT coverage does not allow OUs, this procedure applies if establishing separate APH databases for acreage that could be OUs under additional coverage.

(1) For the current (policy) crop year, the insured must submit acceptable production reports by BU or OU for the most recent APH crop year in the base period to be eligible for OUs. However, insureds with an agreement to combine OUs are not allowed to divide OUs combined under the Agreement. See Exh. 10.

(2) If the acreage and production has not been maintained separately for BUs or OUs, the insured may submit (recertify) production reports for BUs or OUs for prior APH crop years that were previously reported as one unit. When recertifying, production reports must begin with the most recent APH crop year in the base period and work backward (2018, 2017, 2016, etc.) to maintain continuity. Reported acreage must include insurable planted acres and PP acreage for which yields have been assigned ("PP" and "PW" yield descriptors). Only continuous recertified production reports will be used to complete the new APH database and compute the APH yields.

**Step 1:** Complete the most recent APH crop year in each unit's APH database using the current year's production reports.

**Step 2:** If additional APH crop years (previously reported) are recertified, update prior APH crop years using the actual production history from each unit (by P/T/TMA).

(a) For crop years that the production cannot be recertified, the insured should report acres by unit by crop year.

(b) When acres are reported by unit, but the production is commingled, prorate the commingled production to unit APH databases with planted acres:

(i) By dividing the total production by the total acres and multiply the resulting average yield times the planted acres.

**C. Dividing a WU/EU into BUs, BUs into Additional BUs, WU/EU and BUs into OUs and Further Dividing OUs (Category B Crops) (continued)**

(ii) Identify prorated actual production with the "PA" yield descriptor.

(iii) Duplicate assigned yields (identified with "P" yield descriptor) to appropriate APH databases.

(c) For crop years that are not recertified or acres reported by unit, enter the total acres and production (including assigned yields) in each unit for each APH crop year.

(i) Identify duplicated actual production with the "DA" yield descriptor.

(ii) Duplicate assigned yields (identified with "P" yield descriptor) to appropriate APH databases.

**Step 3:** If less than four years of actual and/or assigned yields are available, enter the applicable variable T-Yield(s) to complete each 4-year database. Previously established SA T-Yields are NOT used.

**Step 4:** Calculate the approved APH yield.

**1088 Dividing a BU into Additional BUs or OUs, or OUs into Further OUs for Category C Crops**

The insured must submit acceptable production reports by BU/OU for at least the most recent APH crop year in the base period according to the applicable unit division requested for the current (policy) crop year and:

**A. Recertify Production Reports**

The insured must recertify production reports for prior APH crop years by BU or OU unless production records have been maintained corresponding to the proposed unit structure.

(1) If corresponding APH block production or prior years block production worksheets have been completed, the actual yields must be used to calculate the APH yield for each BU or OU.

(2) When recertifying, production reports must begin with the most recent APH crop year in the base period and work backward (2018, 2017, 2016, etc.) to maintain continuity.

(3) Only continuous recertified production reports will be used to complete the new APH database and calculate the approved APH yields.

## 1088 Dividing a BU into Additional BUs or OUs, or OUs into Further OUs for Category C (cont.)

### B. Commingled Production

If the insured is unable to separate (recertify or if APH block production or prior years block production worksheets are not available for the BUs or OUs) all prior years' production history (other than the most recent crop year) for each requested BU or OU (by P/T/TMA or other characteristics) the initial year BUs or OUs are requested:

(1) the AIP must use the lower of the actual yield (from the OU or BU being divided) or variable T-Yield (based on the number of years actual records certified for the crop) as the yield each crop year that the production history is not separated according to the BU or OU structure.

When variable T-Yields are used instead of actual yields, use the applicable yield descriptor ("SX", "EX", "NX", or "IX" for 100 percent) (e.g., "NX" 500). These yields remain in the APH database until outside of the base period and do not increase if additional years of actual/assigned yields are provided;

(2) if different T-Yields by P/T/TMA or other characteristics are applicable and separate acres are available, the Multi-Purpose Production and Yield Worksheet in Exh. 18 may be used to separate the production. These yields are not eligible for yield substitution and must be identified with the "AC" yield descriptor. This procedure is not applicable for separate T-Yields by age and/or density; or

(3) the insured may request a RO Determined Yield. The RO Determined Yield must be requested by the applicable PRD for the crop year.

The RO will establish databases, which may be updated by the insured/AIP in subsequent years. When fewer than four years have been separated, and RO Determined Yields are used to complete the four-year database, such yields are identified by the "F" yield descriptor.

## 1089 Adding Land to an Existing Unit for Category B Crops

See Part 17.

## 1090 Retaining Yield History for the Same Land

To retain yield history when the BU or OU is from a valid APH database and the same entity/person and land is involved:

### A. Unit Renumbered or FSA FN Reconstituted

Verify that the same entity and land is involved. If the same entity and land, the actual/assigned yield history is retained. Yield limitation provisions, if applicable, will apply.

### B. Complete the APH Database for the Current Policy Crop Year

Enter the yield history for all (policy) crop years in the database using current APH rules.

## 1091-1100 (Reserved)

# PART 11 UNDERWRITING RULES FOR SPECIFIC PRACTICES
## Section 1 Irrigated Practice

### 1101 IRR Practice Guidelines

AIPs must provide the Irrigated Practice Guidelines to insureds for whom the irrigated practice may apply prior to the time that insurance generally attaches in an area. See FCIC 24040 DSSH for Irrigated Practice Guidelines.

### 1102 Insurable Acreage

To be insurable under the IRR practice, the acreage must be insurable acreage for which the insured demonstrates to the AIP's satisfaction that adequate facilities and reasonable expectation of receiving adequate water existed at the time insurance attached to carry out a good irrigation practice for the insured crop.

If the insured knew or had reason to know prior to the time insurance attached that their irrigation water supply may be reduced before coverage begins, no reasonable expectation exists.

When acreage does not qualify for insurance under the IRR practice, such acreage will be insured under a practice other than IRR. If no other appropriate practice is available for the acreage, insurance will not be considered to have attached on the acreage.

### 1103 Applicable Terms

The following table provides terms and requirements to facilitate a uniform understanding of standards and guidelines for the IRR practice.

| TERM | REQUIREMENT |
|---|---|
| Adequacy of Irrigation Facilities | Irrigation facilities are considered adequate if it is determined that, at the time insurance attaches to planted or perennial acreage, they will be available and usable at the times needed and have the capacity to timely deliver water in sufficient quantities to carry out a good irrigation practice for the acreage insured under the IRR practice. |
| Adequacy of Water | The determination of the adequacy of water shall be based upon:<br><br>(1) the water available, at the time insurance attaches, from the irrigation water supply, soil moisture levels, and, as applicable, snow pack storage levels; and<br>(2) supplementary precipitation which would normally be received after insurance attaches, during the period that a good irrigation practice is normally carried out. Consideration will also be given to the factors identified in Para. 1104, including the legal entitlement or rights to water. |

| TERM | REQUIREMENT |
|---|---|
| Efficient Irrigation | Carrying out a good irrigation practice using a lesser amount of irrigation water than historically applied, but still achieving the irrigated APH yield by implementing enhanced management practices to increase efficiency of irrigation water use.<br><br>Enhanced management practices to increase efficiency of irrigation water use include, but are not limited to, the following:<br><br>• Irrigation Method – Employing an irrigation water distribution technique or technology that has demonstrated greater efficiency (e.g. converting gravity flood irrigation to a center pivot or underground drip tape).<br>• Converting high pressure impact sprinklers to low pressure impacts under center pivot irrigation.<br>• Soil Moisture Monitors – Using soil moisture monitor output to set the schedule and amount of irrigation water applied. |
| Good Irrigation Practice | Application of adequate water in an acceptable manner, at the proper times, to allow production of a normal crop which is often identified as the approved APH yield for crops. |
| Irrigation Equipment and Facilities | The physical resources, other than water, used to regulate the flow of water from a water source to the acreage. This includes pumps, valves, sprinkler heads, and other control devices. It also includes pipes or pipelines which:<br><br>(1) are under the control of the insured; or<br>(2) routinely deliver water only to acreage which is owned or operated by the insured. A center pivot system is considered irrigation equipment and facilities. |
| Irrigation Water Supply | The water source and means for supplying irrigation water, not including the equipment or facilities. This includes the water source and dams, canals, ditches, pipelines, etc., which contain the water for movement from the water source to the acreage that:<br><br>(1) are not under the control of the insured; or<br>(2) routinely deliver water to acreage in addition to that which is owned or operated by the insured. |
| Reasonable Expectation of Adequate Water | The insured had no reason to know at the time coverage began the amount irrigation water may be limited or reduced. No reasonable expectation exists if the insured knew, or had reason to know, the amount of irrigation water may be reduced before coverage begins. |
| Water Source | The source from which water is made available. This includes wells, lakes, reservoirs, streams, aquifers, etc. |

## 1104 Factors to Consider for IRR Practice Reporting and Coverage

Insureds must maintain, and provide upon request, documentation of the factors which were considered in reporting acreage under IRR practice. Factors to consider in determining planted or perennial crop acreage reported and insured under IRR practice include, but are not limited to:

(1) water source history, trends, and forecasting reliability;

(2) supplemental water supply availability and usage, including return flow;

(3) pumping plant efficiency and capacity;

(4) water distribution uniformity and flexibility of the system or district;

(5) water requirements, such as amount and timing, of all crops to be irrigated;

(6) water rights, such as primary, secondary, urban versus agricultural use, etc.;

(7) contingency plans available to handle water shortages;

(8) number of acres to be irrigated, amount of water to be applied to acres, and expected yield;

(9) ownership of water, such as state, federal, landowner or insured;

(10) use of meters and other measuring devices or methods;

(11) soil types, soil moisture levels, and pre plant irrigation needs;

(12) water conserving methods, devices, and plans utilized;

(13) past crop planting history, trends, and recommended local practices;

(14) prudent activities and practices utilized by non insured producers;

(15) irrigation water supply, both quantity and quality, and facilities;

(16) recommendations from local CES, NRCS, and sources recognized by CES or NRCS to be an expert in the area regarding irrigation and crop production;

(17) information the insured knew, or should have known, and when the insured knew, or should have known, such information; and

(18) management practices to carry out efficient irrigation, including: historical average of irrigation water applied, current amount of irrigation water intended to apply to carry out a good irrigation practice, and a quantifiable amount of efficiency gained from management changes that can be supported by evidence from agricultural experts as defined in the Common Crop Insurance Policy – Basic Provisions.

AIPs shall use these and any other appropriate factors necessary, to verify whether acreage was properly reported under the IRR practice.

AIPs will also notify the applicable RMA RO using the contact information provided at http://www.rma.usda.gov/aboutrma/fields/rsos.html if an area is suspected to have inadequate irrigation water.

(1) All AIPs are to notify the appropriate RMA RO immediately of any areas they suspect to have inadequate irrigation water quality or quantities, so RMA can develop, update, and distribute the information.

(2) Areas are to be identified by county, and if only a specific irrigation area or district is applicable, the identification should specify accordingly; e.g., Grant County (Nemaha Irrigation District only). Crops for which an irrigated practice is available that may be affected by suspected inadequate irrigation water should also be identified.

## 1105 Failure to Carry Out Good IRR Practice

Failure to carry out a good irrigation practice on acreage properly insured under the IRR practice will result in an appraisal for uninsured causes, unless the failure was caused by unavoidable failure of the irrigation water supply after insurance attached.

If a loss is evident, acreage reported as an IRR practice that qualified as an IRR practice at the time insurance attached cannot be revised to a NI practice after the ARD even if liability stays the same or decreases, regardless of whether the insured applied any water.

## 1106 IRR Practice Guidelines for PP

Insureds may be eligible for a PP payment for acreage historically grown under an IRR practice even if the acreage could have been planted with a NI practice, provided:

(1) all other PP requirements have been met; and

(2) there is not a reasonable expectation of having adequate water to carry out an IRR practice due to an insured cause of loss occurring on or after the applicable SCD through the FPD, or within the LP period, if applicable.

The applicable SCD for:

(1) carryover insureds is the SCD for the previous crop year; and

(2) new insureds is the SCD for the current crop year.

Insureds must maintain, and provide upon request, documentation of the factors which were considered in reporting there was no reasonable expectation of receiving adequate water for the acreage reported as PP under an IRR practice.

## 1107 Determined IRR Yields

### A. Applicability of Determined IRR Yields

Determined IRR yields may be used the first time an IRR practice is carried out on a unit if a NI practice has previously been carried out. Determined IRR yields are not applicable to acreage assigned high-risk T-Yields or if carried out on added land, unless acceptable production reports are filed for the NI practice based on records from another person sharing in the crop.

### B. Qualifying for Determined IRR Yields

AIPs may approve a determined yield for an IRR practice the first time the IRR practice qualifies as an added practice on a unit, provided:

(1) a NI practice has been carried out for the crop and acceptable production reports have been provided for the NI practice;

(2) the NI practice for the same unit/location, such as FSA FN, legal description, or location if the IRR unit is a separate OU, has a higher approved APH yield than the approved APH yield available for the IRR practice using variable T-Yield procedures that apply for the added IRR practice when no IRR records are available for the unit; and

(3) the situation does not require a RO determined yield.

A request for a determined IRR yield must be sent to the RO for approval in situations requiring a RO determined yield. See Part 18 for Category C procedures for RO determined yields.

### C. Request Requirements for Determined IRR Yield

A written request for a determined IRR yield must be received by the AIP no later than 20 days after the PRD.

Requests must include:

(1) legal descriptions of the unit(s) for which the determined IRR yield is being requested;

(2) copies of the production reports for the most recent crop year; and

(3) documentation indicating the water quality, supply, and irrigation equipment and facilities are adequate to meet a good irrigation practice.

If a request is not timely made the first time an IRR practice is carried out on a unit then determined IRR yields will not apply.

### D. T-Yield Reference Factor

A T-Yield reference factor must be calculated to establish a determined IRR yield. The following table provides instructions for calculating a T-yield reference factor.

| STEP | ACTION |
|---|---|
| 1 | Determine the location where the IRR practice will be carried out. |
| 2 | Determine the approved APH yield for the NI practice applicable to the same unit/location. This is the NI reference unit. |
| 3 | Compare the NI approved APH yield for the reference unit to the variable T-Yield that would apply to the IRR practice.<br><br>If the NI approved APH yield for the reference unit is less than the variable T-Yield for the IRR practice, the unit does not qualify for the determined factored T-Yield. The variable T-Yield for the IRR practice applies.<br><br>If the NI approved APH yield for the reference unit is greater than the approved APH yield available for the IRR practice using variable T-Yield procedures, identify the reference unit number in the "other" block on the APH database to document the reference unit used for calculating the determined IRR yield. |
| 4 | Divide the NI approved APH yield by the applicable NI T-Yield and determine a reference factor. Round to two decimal places.<br><br>If the reference unit contains more than one NI approved APH yield, calculate a reference factor for each NI approved APH yield and then determine a simple average reference factor. |
| 5 | Ensure the T-Yield reference factor calculated in step 4 does not exceed the applicable maximum T-Yield reference factor. The maximum T-Yield reference factor allowed is determined by the number of years of actual yields provided for the crop/county. The maximum T-Yield reference factor is:<br><br>(1) 1.20 when one or two years of actual yields are provided;<br>(2) 1.30 when three years of actual yields are provided; and<br>(3) 1.40 when four or more years of actual yields are provided.<br><br>**Example 1:** The reference unit is 0001-0000 in N1/2 Section 15. The NI practice approved APH yield for the reference unit is 425 lbs. The 100 percent T-Yield for the NI practice is 320 lbs. Four years of actual yields have been provided for the crop in the county. Therefore, the T-Yield reference factor is 1.33 (425 ÷ 320 = 1.33).<br><br>**Example 2:** The reference unit is 0001-0000 in N1/2 Section 15. The NI practice approved APH yield for the reference unit is 420 lbs. The 100 percent T-Yield for the NI practice is 320 lbs. Two years of actual yields have been provided for the crop in the county. Therefore, the T-Yield reference factor is 1.20 (420 ÷ 320 = 1.31, but limited to 1.20). It is limited to 1.20 because only two years of actual production were provided. |

### E. Establishing Determined IRR Yield

Once a T-Yield reference factor has been determined, establish a determined IRR yield. The following table provides instructions for establishing a determined IRR yield.

| STEP | ACTION | RESULT |
|---|---|---|
| **1** | Calculate the factored IRR T-Yield by multiplying the T-Yield reference factor times the 100 percent T-Yield for the IRR practice. | Factored IRR T-Yield |
| **2** | Determine the approved IRR yield of nearest existing unit.<br><br>If any IRR production records have been provided for any unit for the crop, select the approved APH yield for the unit, basic or optional, containing records for the IRR practice that is physically located nearest to the reference unit.<br><br>Use the IRR unit with the most years of records if more than one unit with IRR production records are located an equal distance from the reference unit. | Approved IRR yield of nearest existing unit |
| **3** | Assign the determine IRR yield. If IRR production records in step 2 were:<br><br>(1) not provided, the determined yield is the factored IRR T-Yield calculated in step 1; or<br><br>(2) provided, the determined yield is the lessor of:<br><br>(a) the factored IRR T-Yield calculated in step 1; or<br><br>(b) approved IRR yield of nearest existing unit determined in step 2. | Determined IRR yield |

**Example 1:** In this example the reference unit is 0001-0000, N1/2 Section 15. It has a NI practice approved APH yield of 425 lbs. Four years of actual yields have been provided for the crop in the county, and the NI 100 percent T-Yield is 320 lbs.

Calculate the T-Yield reference factor by dividing the NI practice approved APH yield by the applicable NI T-Yield. The T-Yield reference factor is 1.33 (425 ÷ 320 = 1.33).

An IRR practice is added to N1/2 Section 15, it becomes part of unit 0001-0002, and the 100 percent T-Yield for the IRR practice is 400 lbs.

Calculate the factored IRR T-Yield by multiplying the 100 percent T-Yield for the IRR practice times the T-Yield reference factor (step 1). The factored IRR T-Yield is 532 lbs. (1.33 x 400 = 532).

**E. Establishing Determined IRR Yield (Continued)**

IRR practice production records from the nearest unit were provided (step 2). The approved IRR yield of that unit is 550 lbs.

The determined IRR yield is 532 lbs, which is the lesser of the factored IRR T-Yield (532 lbs.) or the approved IRR yield of the nearest existing unit (550 lbs.).

Compare the determined IRR Yield (532 lbs.) to the added practice variable T-Yield (400 lbs. 100 percent of IRR T-Yield) and use whichever is higher.

**Example 2:** In this example the reference unit is 0001-0000, N1/2 Section 15. It has a NI practice approved APH yield of 420 lbs. Two years of actual yields have been provided for the crop in the county, and the NI 100 percent T-Yield is 320 lbs.

Calculate the T-Yield reference factor by dividing the NI practice approved APH yield by the applicable NI T-Yield. The T-Yield reference factor is 1.20 (420 ÷ 320 = 1.20). The T-Yield reference factor is limited to 1.20 because only two years of actual production were provided.

An IRR practice is added to N1/2 Section 15, it becomes part of unit 0001-0002, and the 100 percent T-Yield for the IRR practice is 400 lbs.

Calculate the factored IRR T-Yield by multiplying the 100 percent T-Yield for the IRR practice times the T-Yield reference factor (step 1). The factored IRR T-Yield is 480 lbs. (1.20 x 400 = 480).

IRR practice production records from the nearest unit were provided (step 2). The approved IRR yield of that unit is 460 lbs.

The determined IRR yield is 460 lbs., which is the lesser of the factored IRR T-Yield (480 lbs.) or the approved IRR yield of the nearest existing unit (460 lbs.).

Compare the determined IRR Yield (460 lbs.) to the added practice variable T-Yield (400 lbs. 100 percent of IRR T-Yield) and use whichever is higher.

### F. Documenting the Determined IRR Yield

When determined IRR Yields are established and used, four determined IRR yields are entered in the yield column of the APH database identified with the yield descriptor "C".

For subsequent crop years, the determined IRR T-Yield is used to complete the 4-year APH database until four years of actual and/or assigned yields are available.

The request for the determined IRR yield, supporting documentation, and determined IRR yield calculations must be retained and provided if the policy is selected for an APH review.

## 1108 Reporting Production and Establishing APH Databases for IRR and NI Acreage

Separate production reports must be provided and separate APH databases must be established for IRR and NI practices when IRR and NI practices are indicated on the actuarial documents. If production is commingled between an IRR and a NI practice, separate yields must be established for the two practices by using the Multi-Purpose Production and Yield Worksheet or by using the insured's certification of estimated production for the IRR and NI production. See Para. 1715 for more information about separating comingled production.

Insureds are required to keep their production records separate for:

(1) acreage insured under the IRR practice;
(2) acreage insured under a practice other than IRR or with no practice applicable; and
(3) uninsured acreage.

**Exception:** Separate production reports and APH databases are not required when the planting pattern for NI corners of a center pivot irrigation system continues into the irrigated acreage of the center pivot irrigation system and the acres and production from the NI corners are not separated from the acres and production from the irrigated acres. See Para. 1109 for procedures for center pivot irrigation systems.

## 1109 Special Requirements for Center Pivot Irrigation Systems

### A. Applicability

The procedures in this paragraph pertain to all annual crops except rice. See Para. 1021F for unit division instructions.

**B. Determining NI Corners of a Center Pivot Irrigation System**

Corners of a center pivot irrigation system are limited to the acreage within intersecting lines drawn at right angles to the radius of the center pivot when the planting pattern for NI corners continues into the irrigated acreage of the center pivot irrigation system. The following is an example of how to identify NI corners in a center pivot irrigation system by drawing lines at right angles to the radius of the center pivot circle.

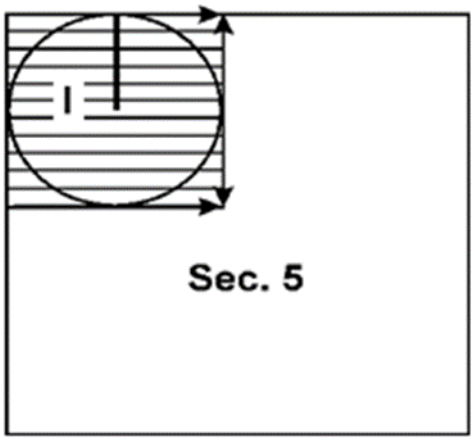


**C. Production Reports and APH Yields**

The acres and production from the NI corners of a field must be included with the acres and production from the field irrigated by the center pivot irrigation system when the same insured crop is planted on the NI corner acres and the irrigated acres; and separate production records for NI corner acres and irrigated acres are not provided. If NI is not insurable for the county/crop, the NI corners cannot be insured as irrigated acreage with the center pivot irrigation system.

Separate approved APH yields are not calculated for the NI corner acreage when such acreage is considered IRR practice. However, a separate approved APH yield is required for NI acreage that extends beyond the intersecting lines drawn at right angles of the radius of the center pivot system or other NI fields.

When separate production reports are provided for the NI corner acreage and the irrigated acreage under a center pivot irrigation system:

(1) two separate practices, IRR and NI, will be considered as carried out;
(2) a separate APH database for each practice is required; and
(3) IRR acreage is limited to acreage contained within the center pivot irrigation system.

**D. Acreage Reports**

When acreage in NI corners of a center pivot irrigation system is considered an IRR practice, a separate line entry for the NI corner acreage is not required on the acreage report. The acreage in the NI corners considered to be an IRR practice will not extend beyond intersecting lines drawn at right angles to the radius of the center pivot.

When the corners are considered as a separate NI practice the following are applicable:

(1) separate records of acreage are provided for the NI corner acreage and the irrigated acreage under a center pivot irrigation system;

(2) a separate line entry for each practice is required on the acreage report; and

(3) IRR acreage is limited to acreage contained within the center pivot irrigation system.

**E. Separate Units in Subsequent Crop year**

If, in a subsequent crop year, the insured requests separate OUs for the IRR and NI practices, acceptable production reports for the previous APH crop year must be provided for each practice by the PRD. If the insured does not recertify previous crop years, the Multi-Purpose Production and Yield Worksheet must be used to apportion the production for APH crop years prior to the previous crop year for the IRR and NI practices.

If the acreage planted to the IRR and NI practices are not known, the acres and production must be attributed to the IRR practice and the NI practice by using the variable T-Yields or a determined yield, if applicable, calculated according to Part 17 Section 3.

**F. PP Production Guarantee for Corners**

The approved IRR APH yield is used to calculate the PP production guarantee for the NI corners when the NI corners are considered IRR practice and qualify for PP.

**1110-1120 (Reserved)**

## 1121 General Information and Insurability

### A. General Information

SF practice uses mechanical tillage or chemicals on uncropped land to control weeds and store moisture.

### B. Insurability

SF is an insurable practice in some counties.

All of the following must be met to qualify as SF practice for the current crop year.

(1) The SF practices must be consistent with:

(a) NRCS soil erosion control measures; and

(b) recommended SF practices, such as method(s), frequency, adequate tillage and/or chemical controls, for the area.

(2) In addition to lying fallow for a full crop year, plant growth on the acreage must be terminated on or before the applicable plant growth termination date, followed by a continuous chemical and/or mechanical control program. Plant growth termination dates are:

(a) May 1 for California;
(b) June 15 for North Dakota, South Dakota, and Montana; and
(c) June 1 for all other states.

**Example:** Acreage in North Dakota was planted to a crop in 2017 crop year. To qualify for SF practice in the 2019 crop year the land must lay fallow during the 2018 crop year and any plant growth on the acreage, including but not limited to weeds and volunteer crops, must be:

(1) terminated by mechanical and/or chemical means on or before June 15, 2018; and

(2) continuously controlled for the entire 2018 crop year.

(3) The land must not have been planted or devoted to a crop in the immediately preceding crop year and must lie fallow for a full crop year.

(a) For land devoted to a perennial crop, such as grasses, alfalfa, clover, or other perennial plants or forbs, including land previously enrolled in CRP, the perennial crop must be terminated by mechanical or chemical means a full crop year before planting of the crop qualifying for the SF practice.

**B. Insurability (continued)**

(b) When a cover crop is planted on SF acreage in a fallow year, the following planted crop will not meet the SF practice definition until the acres lie fallow for a full crop year. If the acreage did not lie fallow the preceding full crop year:

(i) in those counties where SF and CC practices are available, the acreage may be insured under the CC practice, provided all other provisions of the CC practice are met; or

(ii) in those counties where the only non-irrigated practice available is SF, the acreage may be insurable by WA, provided the cover crop meets the criteria outlined in the SP and the cover crop is not hayed, grazed or otherwise harvested in any manner.

**Exception 1:** Representative sample areas left for loss adjustment purposes will qualify for SF practice provided the:

(1) remainder of the field qualifies for the SF practice; and

(2) representative sample areas are destroyed within 30 days after the applicable plant termination date for the acreage.

If the representative sample areas are not destroyed within 30 days after the applicable plant termination date, such acreage will be considered sub-fields and will not qualify for SF practice.

**Example 1:** Representative sample areas of a crop were left on acreage in North Dakota for loss adjustment purposes. All the representative sample areas were destroyed on June 29, 2018. All other plant growth on the acreage was terminated by mechanical and/or chemical means on or before June 15, 2018. All plant growth on the entire acreage was continuously controlled for the rest of the crop year, and all other SF practice requirements were met.

The entire acreage qualifies for the SF practice for the 2019 crop year.

**Example 2:** Same as example 1, except the representative sample areas were not destroyed until July 20, 2018. The representative sample acreage does not qualify for the SF practice for the 2019 crop year.

**B. Insurability (continued)**

**Exception 2:** Acreage on which a crop was planted in the preceding crop year shall qualify for the SF practice in the current crop year, provided:

(1) the acreage qualified for the SF practice the crop year preceding the current crop year;

(2) the crop planted on the acreage in the crop year preceding the current crop year:

(a) was not harvested; and

(b) failed and/or was destroyed on or before the applicable plant termination date; or

(c) the AIP gives consent to put the acreage to another use and a different second crop is planted on the acreage in the current crop year, if SF is an applicable practice for the second crop; and

(3) all other SF practice requirements are carried out.

**Example:** Acreage in North Dakota was not planted and all SF practice requirements were met in 2017. Therefore the acreage qualified for the SF practice for the 2018 crop year. A crop was planted on the acreage in the spring of 2018. The crop failed, was not harvested, and was destroyed on June 1, 2018. All plant growth on the entire acreage was continuously controlled for the rest of the year after the planted crop failed and was destroyed, and all other SF practice requirements were met.

The acreage qualifies for the SF practice for the 2019 crop year.

**Example:** Acreage in North Dakota was not planted and all SF practice requirements were met in 2017. Therefore, the acreage qualified for the SF practice for the 2018 crop year. A crop was planted on the acreage in the spring of 2018. The crop failed, was not harvested, and was destroyed on June 1, 2018. All plant growth on the entire acreage was continuously controlled for the entire 2018 crop year and all other SF practice requirements were met.

**B. Insurability (continued)**

A crop was planted on the acreage in the spring of 2019. The crop failed, was not harvested, and was destroyed on June 1, 2019. The AIP gave consent to put the acreage to another use and the insured planted a different second crop on the acreage for the 2019 crop year.

The acreage qualifies for the SF practice for the second different crop planted for the 2019 crop year.

**Exception 3:** Acreage that did not qualify for SF practice in the preceding crop year and on which a crop was planted in the preceding crop year shall qualify for the SF practice in the spring of the current crop year, provided:

(1) the crop planted on the acreage in the crop year preceding the current crop year:

(a) was not harvested; and

(b) failed and/or was destroyed on or before the applicable plant termination date; and

(2) all other SF practice requirements are carried out.

**Example:** Acreage in North Dakota was planted and the crop was taken to harvest in 2017. Therefore the acreage did not qualify for the SF practice for the 2018 crop year. A crop was planted on the acreage in the spring of 2018. The crop failed, was not harvested, and was destroyed on June 1, 2018. All plant growth on the entire acreage was continuously controlled for the entire 2018 crop year and all other SF practice requirements were met.

The acreage qualifies for the SF practice for the spring 2019 crop year.

## 1122 SF APH Database Instructions

**A. Special Procedures**

Special production reporting and APH database procedures are applicable in counties with separate T-Yields for SF and CC practices.

**B. Determining Yield**

If the SF APH database contains less than three years of actual and/or assigned yields, the approved APH yield for the SF practice will be, unless the insured indicates otherwise, the higher of the:

(1) APH yield calculated for the SF practice using variable T-Yields;

(2) approved APH yield calculated for the CC practice, provided a CC practice has been carried out on the same APH database; or

(3) APH SF yield derived from SA T-Yield, provided the SF practice will be carried out on added land or a new practice on an existing unit. See Part 17 section 9 and 10 for more information about determining yields for added land and new practices.

**C. Completing the APH Database and Subsequent Years**

If the APH yield calculated for the CC practice is used for the SF practice, enter it in the approved APH yield column of the acreage report for the SF practice. For data processing purposes, identify the CC yield record being used. The APH database must be updated in subsequent crop years with SF actual/assigned yields.

The production history for the SF practice must be retained and used to update the SF APH database according to the applicable procedure for subsequent crop years.

This method applies until the SF practice contains at least three years of actual or assigned yields. When the SF APH database contains three years of actual and/or assigned yields, the SF APH database will be used to calculate the approved APH yield for the SF practice according to applicable subsequent crop year procedure.

**1123-1144 (Reserved)**

## 1145 Insurability

Skip-row planted crops are not insurable unless:

(1) authorized by the CP;
(2) authorized by the actuarial documents; or
(3) insured under an Unrated P/T WA.

See the WAH for more information about Unrated P/T WA.

## 1146 Skip-Row Planted Corn

### A. Insurability

The SP for NI corn for grain in certain counties provide specific criteria, including specific skip-row planting patterns, that must be met to insure skip-row planted NI corn for grain without a WA. A WA is required to insure skip-row planted corn for any specific types, practices or planting patterns not addressed in the SP, and in any counties that do not identify skip-row planted corn as insurable.

### B. Determining Planted Acreage

The following table provides instructions for determining the number of acres considered planted to corn when acreage is planted on a skip-row basis.

| **IF** the skip-row planted corn is insured … | **THEN** the number of acres considered planted to corn is … |
|---|---|
| without a WA<br><br>**Note**: To be insured without a WA, skip-row planted corn must meet all the SP requirements. | based on the number of physical land acres planted to the crop. A FSA percent planted factor is **not** used to determine the number of acres considered planted. |
| under a WA | determined by the terms of the WA, which may include the use of a FSA percent planted factor. |

**Example 1:** A 100 acre field in Phillips County, Colorado is planted to NI corn for grain in a two rows planted one row skipped planting pattern with a 30 inch row width. All the SP requirements are met; therefore, a FSA percent planted factor is not used to determine the number of acres planted. Accordingly, the total number of acres planted to the crop is 100 acres.

**Example 2:** A 100 acre field in Jefferson County, Kansas is planted to NI corn for grain in a two rows planted one row skipped planting pattern with a 30 inch row width. Skip-row planted corn is not insurable in Jefferson County, Kansas unless insured under a WA. The terms of the WA will determine whether a FSA percent planted factor will be used to determine the number of acres planted to the crop.

**C. Recording and Reporting Skip-Row Planting Patterns and Row-Widths on Acreage Report**

Beginning with the 2009 crop year, the skip-row planting pattern and row-width for skip-row planted corn must be:

(1) recorded on the insured's acreage report; and
(2) reported to RMA.

A separate line entry is required on the acreage report for solid planted acreage and each separate skip-row planting pattern and row width. The skip-row planting pattern and row width established on the FPD is the planting pattern used for determining the number of acres planted.

The following table provides the skip-row codes for skip-row planted corn. The following RMA skip-row codes are only for skip-row planted corn. Do not use the codes for other skip-row planted crops or for solid planted corn acreage.

| SKIP-ROW PLANTING PATTERN | ROW WIDTH | SKIP-ROW CODE |
|---|---|---|
| 1 row planted 1 row skipped | 30 inch | 10130 |
| 2 rows planted 1 row skipped | 30 inch | 20130 |
| 2 rows planted 1 row skipped | 36 inch | 20136 |
| 2 rows planted 2 rows skipped | 30 inch | 20230 |
| Other | | 11111 |

**Example:** Insured A plants NI corn for grain in Phillips County, Colorado. Some of the acreage is solid-planted and some acreage is planted using different skip-row patterns and row widths. All the acreage planted in skip-row patterns meets all the SP requirements. Insured A plants the following acreage to NI corn for grain.

- 100 acres solid-planted;
- 80 acres in a 2x1 skip-row pattern with 30 inch rows;
- 90 acres in a 2x2 skip-row pattern with 30 inch rows; and
- 40 acres in a 2x1 skip-row pattern with 36 inch rows.

Insured A's acreage report has the following 4 separate entries.

- 100 acres of solid-planted (no skip-row code);
- 80 acres of 2x1 30 inch skip-row (20130 skip-row code);
- 90 acres of 2x2 30 inch skip-row (20230 skip-row code); and
- 40 acres of 2x1 36 inch skip-row (20136 skip-row code).

**D. No Separate APH Databases**

AIPs shall not establish or maintain separate APH databases for skip-row planted corn. In 2009, AIPs were instructed to convert insured's existing skip-row NI corn APH database to a solid planted basis and combine the converted APH databases with the insured's existing solid planted NI corn APH database.

**E. Recording and Reporting Skip-Row Planting Patterns and Row Widths on APH Database**

Beginning with the 2009 crop year, the skip-row planting pattern and row width for skip-row planted corn must be recorded on the insured's APH database. The recorded skip-row planting pattern and row width must be identified using a skip-row code and reported to RMA on the applicable Yield Record.

The skip-row planting pattern and row width established on the FPD is the planting pattern to be recorded. Use the skip-row codes in Para. 1146C to record the skip-row planting pattern and row width. The following table provides instructions on recording applicable skip-row codes in APH databases.

| **IF** the corn acreage recorded in the APH database for the crop year … | **THEN** AIP shall … |
|---|---|
| was all planted on a solid-planted basis | **not** record any skip-row code in insured's APH database for that year. |
| included some corn acreage planted on a solid-planted basis and some acreage planted on a skip-row planted basis | record the skip-row code 11111 in insured's APH database for that year. |
| was all planted using the same skip-row planting pattern and row width | record the applicable skip-row code in the insured's APH database for that year. |
| was all planted on a skip-row basis but more than one planting pattern and/or row width was used | record the skip-row code 11111 in insured's APH database for that year. |

**Example 1:** Insured B plants NI corn for grain in Phillips County, Colorado. All the acreage is planted on a skip-row basis and all SP requirements are met. Insured B plants the following acreage to NI corn for grain.

- 80 acres in a 2x1 skip-row pattern with 30 inch rows;
- 90 acres in a 2x2 skip-row pattern with 30 inch rows; and
- 40 acres in a 2x1 skip-row pattern with 36 inch rows.

Insured B's acreage report has the following 3 separate entries.

- 80 acres of 2x1 30 inch skip-row (20130 skip-row code);
- 90 acres of 2x2 30 inch skip-row (20230 skip-row code); and
- 40 acres of 2x1 36 inch skip-row (20136 skip-row code).

**E. Recording and Reporting Skip-Row Planting Patterns and Row Widths on APH Database (continued)**

AIP records skip-row code 11111 in Insured B's subsequent year's APH database.

**Example 2:** Same as example 1, except Insured B plants all 210 acres using a 2x1 skip-row pattern with 30 inch rows. Insured B's acreage report has one entry for the 210 acres with skip-row code 20130. AIP records skip-row code 20130 in Insured B's subsequent year's APH database.

**F. "S" Yield Indicator**

Do not use a "S" yield indicator to identify APH databases that include skip-row planted corn. The skip-row code will identify APH databases that contain skip-row planted corn acres and production; therefore, a "S" yield indicator is not needed or authorized.

**G. Skip-Row Yield Conversion Factor**

Yield conversion factors are not applicable to skip-row planted corn. Calculate actual yields for skip-row planted corn by dividing the total production by the total number of planted acres, as determined according to Para. 1146B.

## 1147 Skip-Row Planted Grain Sorghum

**A. Insurability**

Skip-row planted grain sorghum is not insurable unless authorized by the SP or insured under an Unrated P/T WA.

**B. Determining Planted Acreage**

AIPs shall use the applicable FSA percent planted factor to determine the number of planted acres of grain sorghum planted on a skip-row basis. To determine the number of planted acres, multiply the number of physical land acres planted to the crop times the applicable FSA percent planted factor. See Para. 1149 for FSA percent planted factors for grain sorghum.

The skip-row planting pattern and row width established on the FPD is the planting pattern and row width that will be used to determine the number of planted acres. The number of planted acres determined using the applicable FSA percent planted factor is the number of acres to be recorded on the insured's acreage report and APH database.

**B. Determining Planted Acreage (Continued)**

**Example:** Insured A plants a 300 acre field entirely to grain sorghum using a 2 rows planted one row skipped planting pattern with 40 inch row width. Multiply 300 acres times .6667, the FSA percent planted factor for the planting pattern and row width, to determine the number of acres planted. The number of acres considered planted to grain sorghum that would be reported on Insured A's acreage report and APH database is 200 acres (300 x .6667 = 200).

**C. Separate APH Databases**

AIPs shall establish and maintain separate APH databases for:

(1) skip-row planted grain sorghum; and
(2) solid-planted grain sorghum.

**D. "S" Yield Indicator**

APH databases for skip-row planted grain sorghum must be identified by a "S" yield indicator, and reported to RMA on the Yield Record.

**E. Skip-Row Yield Conversion Factor**

Yield conversion factors are not applicable to skip-row planted grain sorghum.

**F. Calculating Actual Yields**

Calculate actual yields for skip-row planted grain sorghum by dividing the total production by the total number of planted acres, as determined according to B above.

**Example:** Insured A plants a 300 acre field entirely to grain sorghum using a 2 rows planted one row skipped planting pattern with 40 inch row width. The number of acres considered planted to grain sorghum reported on Insured A's acreage report and APH database is 200 acres (300 x .6667 = 200). When calculating the actual yield, the total production is divided by 200 acres.

**1148 Skip-Row Planted Cotton and ELS Cotton**

**A. Insurability**

IRR and NI skip-row planted cotton and IRR ELS skip-row cotton are insurable according to the applicable CP and SP.

**B. Determining Planted Acreage**

AIPs shall use the applicable FSA percent planted factor to determine the number of planted acres of cotton and ELS cotton planted on a skip-row basis. To determine the number of planted acres, multiply the number of physical land acres planted to the crop times the applicable FSA percent planted factor. See Exh. 11 for FSA percent planted factors for cotton.

The number of planted acres determined using the applicable FSA percent planted factor is the number of acres to be recorded on the insured's acreage report and APH database.

**Example:** Insured A plants a 300 acre field entirely to cotton using a 2 rows planted two rows skipped planting pattern with 36 inch row width. Multiply 300 acres times .5000, the FSA percent planted factor for the planting pattern and row width, to determine the number of acres planted to cotton. The number of acres considered planted to cotton that would be reported on Insured A's acreage report and APH database is 150 acres (300 x .5000 = 150).

**C. Recording and Reporting Skip-Row Planting Patterns and Row Widths on Acreage Report**

Beginning with the 2007 crop year, the skip-row planting pattern and row width for skip-row planted cotton and ELS cotton must be recorded on the insured's acreage report.

A separate line entry is required on the acreage report for solid planted acreage and each separate skip-row planting pattern and row width. The skip-row planting pattern and row width established on the FPD is the planting pattern used for determining and reporting the number of acres planted.

The recorded skip-row planting pattern and row width must be reported to RMA on the applicable Acreage Record.

The tables in Exh. 11 provide the skip-row codes for skip-row planted cotton and ELS cotton, by state and county.

**Example:** Insured A plants 400 acres of NI cotton in Baylor County, Texas in a two rows planted one row skipped planting pattern with 30 inch rows. The 400 acres were determined using the applicable FSA percent planted factor. Insured A's acreage report has a skip-row code of 20230 for the 400 acres of skip-row planted cotton. 202 is the skip-row code and 30 is the row width. See Exh. 11 for more examples.

**D. No Separate APH Database**

When an insured has both skip-row planted and solid planted cotton, AIPs shall not establish or maintain separate skip-row and solid planted APH databases regardless of whether the actuarial documents contain additional separate practices for skip-row.

AIPs shall establish and maintain APH databases based on other applicable practices, such as irrigated, transitional and certified organic.

Use the following table to determine the correct APH database for skip-row and solid-planted cotton.

| **IF** the acreage recorded in the APH database is … | **THEN** the APH database would be identified as … |
|---|---|
| All irrigated solid planted conventional cotton | Irrigated 002. |
| All irrigated solid planted transitional cotton | Organic (transitional) irrigated 712. |
| All irrigated solid planted certified organic cotton | Organic (certified) irrigated 702. |
| All irrigated skip-row planted conventional cotton* | Irrigated 002. |
| All irrigated skip-row planted transitional cotton* | Organic (transitional) irrigated 712. |
| All irrigated skip-row planted certified organic cotton* | Organic (certified) irrigated 702. |
| A combination of irrigated conventional solid planted and irrigated conventional skip-row planted cotton* | Irrigated 002. |
| A combination of irrigated solid planted transitional and irrigated skip-row transitional planted cotton* | Organic (transitional) irrigated 712. |
| A combination of irrigated solid planted certified organic and irrigated skip-row certified organic planted cotton* | Organic (certified) irrigated 702. |
| All non-irrigated solid planted conventional cotton | Non-irrigated 003. |
| All non-irrigated solid planted transitional cotton | Organic (transitional) non-irrigated 714. |
| All non-irrigated solid planted certified organic cotton | Organic (certified) non-irrigated 713. |
| All non-irrigated skip-row planted conventional cotton* | Non-irrigated 003. |
| All non-irrigated skip-row planted transitional cotton* | Organic (transitional) non-irrigated 714. |
| All non-irrigated skip-row planted certified organic cotton* | Organic (certified) non-irrigated 713. |
| A combination of non-irrigated conventional solid planted and non-irrigated conventional skip-row planted cotton* | Non-irrigated 003. |
| A combination of non-irrigated solid planted transitional and non-irrigated skip-row transitional planted cotton* | Organic (transitional) non-irrigated 714. |
| A combination of non-irrigated solid planted certified organic and non-irrigated skip-row certified organic planted cotton* | Organic (certified) non-irrigated 713. |

*Includes different skip-row planting patterns and row widths. Separate APH databases shall not be established or maintained based on different planting patterns or row widths

**E. "S" Yield Indicator**

Do not use a "S" yield indicator to identify APH databases that include skip-row planted cotton or ELS cotton.

**F. Recording and Reporting Skip-Row Planting Patterns and Row Widths on APH Database**

Beginning with the 2007 crop year, the skip-row planting pattern and row width for skip-row planted cotton and ELS cotton must be recorded on the insured's APH database.

Record the planting pattern and row width using the applicable skip-row code and row width. See Exh. 11 for the applicable skip-row codes for cotton and ELS cotton. The skip-row planting pattern and row width established on the FPD is the planting pattern to be recorded.

The recorded skip-row planting pattern and row width must be reported to RMA on the applicable Yield Record.

**G. Skip-Row Yield Conversion Factors**

Skip-row yield conversion factors are used to convert:

(1) harvested production from skip-row acreage to an equivalent solid-planted acreage production amount; and

(2) solid-plant approved APH yields to skip-row approved APH yields when qualifying skip-row planting patterns are carried out for the current crop year.

See Exh. 11 for more information about yield conversion factors for skip-row planted cotton and ELS cotton.

Skip-row yield conversion factors are applicable to, and used only for, NI cotton and NI ELS cotton. Skip-row yield conversion factors are not applicable to, and are not used for, IRR cotton or IRR ELS cotton.

**H. Minimum Skip Width**

To qualify for a skip-row yield conversion factor greater than 1.00, the minimum width of the skipped area must be at least:

(1) 24 inches in counties covered by Table 1 in Exh. 11; and
(2) 30 inches in counties covered by Tables 2 and 3 in Exh. 11.

**H. Minimum Skip Width (continued)**

A skip-row yield conversion factor of 1.00 shall be applied to skip-row planting patterns with skipped widths of less than the applicable minimum. However, the number of planted acreage for such acreage shall continue to be determined using the applicable FSA percent planted factor.

**Example:** Insured B plants NI cotton in Baylor County, Texas in a 2 rows planted one row skipped planting pattern with 28 inch rows.

Because the width of the skipped area, 28 inches, is less than the minimum for Baylor County, Texas, 30 inches, the skip-row yield conversion factor applied to the production from the skip-row planted acres will be 1.00. However, the applicable FSA percent planted factor shall be used to determine the number of planted acres.

**I. Calculating Factored Production**

Calculate the factored production by dividing the gross production by the applicable skip-row yield conversion factor based on the location of the acreage and the skip-row planting pattern and row width used. See Exh. 11 for an example of calculating factored production.

## 1149 Percent Planted Factors

The following table provides the FSA percent planted factors for skip-row planting patterns and row widths. See Exh. 11 for tables that include additional skip-row planting patterns that are unique to cotton.

| Skip-Row Planting Pattern | Row Width | Percent Planted Factor |
|---|---|---|
| 1 row planted 1 row skipped | 40 inch | .5000 |
| 1 row planted 1 row skipped | 36 inch | .5556 |
| 1 row planted 1 row skipped | 32 inch | .6250 |
| 2 rows planted 1 row skipped | 30 to 40 inch | .6667 |
| 2 rows planted 2 rows skipped | 30 to 40 inch | .5000 |
| 3 rows planted 1 row skipped | 30 to 40 inch | .7500 |
| 3 rows planted 2 rows skipped | 30 to 40 inch | .6000 |
| 4 rows planted 1 row skipped | 30 to 40 inch | .8000 |
| 4 rows planted 2 rows skipped | 30 to 40 inch | .6667 |
| 4 rows planted 4 rows skipped | 30 to 40 inch | .5000 |
| 5 rows planted 1 row skipped | 30 to 40 inch | .8333 |
| 5 rows planted 2 rows skipped | 30 to 40 inch | .7143 |
| 6 rows planted 1 row skipped | 30 to 40 inch | .8571 |
| 6 rows planted 2 rows skipped | 30 to 40 inch | .7500 |
| 7 rows planted 1 row skipped | 30 to 40 inch | .8750 |
| 7 rows planted 2 rows skipped | 30 to 40 inch | .7777 |
| 8 rows planted 1 row skipped | 30 to 40 inch | .8889 |
| 8 rows planted 2 rows skipped | 30 to 40 inch | .8000 |
| Other patterns | | FSA Rules |

## 1150-1200 (Reserved)

# PART 12 ACREAGE REPORT
## Section 1 General Requirements

### 1201 General Information

This part provides uniform procedures for obtaining acreage reports. The acreage report (tonnage report for raisins) is the document used to determine the liability or amount of insurance, the premium, and the insurable share at the time insurance attached.

### 1202 Filing Requirements

To be considered an acceptable acreage report, the requirements below must be met.

(1) The insured, or authorized representative for the insured, must sign and submit an annual acreage report for the insured crop policy.

**Exception:** For CCIP CAT coverage only, the operator may sign the acreage report for another person sharing in the crop. Unless a person with an insurable interest in the crop objects in writing on or before the ARD, and provides a signed acreage report, the operator may file and sign the acreage report for all other persons with an insurable interest in the crop. A POA is not required. All other persons with an insurable interest in the crop, for whom the operator signs and represents, are bound by the information contained in that acreage report.

(2) Acreage reports must be submitted on or before the crop's ARD contained in the actuarial documents.

**Exception:** For CCIP only:

(a) in lieu of the specific crop's ARD, when multiple crops are insured with the same AIP and have:

- Fall (or winter) final planting dates (August 15-December 30): Insureds are allowed until the latest applicable fall (or winter) ARD for their insured crops to submit the acreage report.

- Spring final planting dates (December 31-August 14): Insureds are allowed until the latest applicable spring ARD to submit the acreage report for their insured crops.

(b) On or before the ARD for each planting period if the actuarial documents designate separate planting periods for a crop.

(c) When planting continues after the final planting date or the insured is prevented from planting during the late planting period, the ARD will be the later of:

- the ARD contained in the actuarial documents;
- the date determined according to (a) and (b) above; or
- five days after the end of the late planting period for the insured crop.

(3) Separate line entries are required on the acreage report for the following:

(a) EUs, BUs and OUs, and within each unit, separate line entries for differing P/T/TMAs, shares, approved APH yields, and risk classifications, when units are applicable. When units are not applicable, separate line entries are required for differing P/Ts and shares;

(b) For WUs, a separate line for each crop and for each crop with differing P/T/TMAs, shares, APH yields, and risk classifications;

(c) Timely planted acres (full production guarantee);

(d) LP acres, with a separate line entry for each day of planting during the LP period (with a reduced production guarantee based upon the number of days planted late), or a separate line entry for acres of a crop prevented from planting after the LP period or a separate line entry after the FPD for crops that do not have a LP period;

(e) Planted acres of the first insured crop for which 100 percent of the premium is due and a separate line of first insured crop acreage for which 65 percent reduction of the premium is applicable;

(f) Eligible PP acres that are eligible for 100 percent of the PP payment and for which 100 percent of the premium is due will be a separate line from eligible PP acres that will have a 65 percent reduction of the PP payment and which will result in a 65 percent reduction in premium;

(g) Uninsurable acreage, designated as specified in Para. 1217;

(h) Uninsured acreage of an insured crop, designated as specified in Para. 1218;

(i) Unreported acreage (within the same unit) is insurable acreage not reported timely and that did not meet the criteria for the AIP to accept the liability for such acreage and designated as such as specified in Para. 1219B; and

(j) Unreported units are units which were not reported timely, or did not meet the criteria for the AIP to accept the unit acreage designated as such, as specified in Para. 1219A.

(4) Contain the required elements of the acreage report, see Para. 1211.

## 1203 Failure to Submit Acceptable Acreage Report

(1) If the insured fails to submit an acceptable acreage report or to report all acreage and/or units, when units are applicable, the AIP may:

(a) deny liability, by unit when units are applicable. Any acreage not reported by the insured and the AIP denies liability must be documented as unreported acreage; or

(b) determine the insurable acreage, share, P/T, etc., and by unit when units are applicable or to deny liability. If the AIP denies liability for the unreported acreage, no premium will be due on such acreage and no indemnity will be paid.

Acreage can only be accepted by the AIP if it is determined from a crop inspection that the acreage meets the criteria for accepting unreported acreage as specified in Para. 1219.

If the AIP declares the crop "insured" the applicable premium and administrative fee are considered earned and payable.

(i) For additional coverage policies, the AIP is entitled to any premium due.
(ii) For CAT coverage policies, RMA is entitled to the imputed premium credit.

See Para. 1219 for reporting requirements for unreported acreage or units.

(2) For CCIP policies, if an unsigned acreage report is submitted, but all other requirements are met, the AIP may send a letter to the insured advising that the reported information will be binding if the insured does not provide revised information within a specified amount of time. If the insured responds with any changes to the reported information, the AIP must document that response in the insured's file folder. In this situation and for loss purposes, this acreage report may be considered to be a signed acreage report.

**Note:** The unsigned acreage reporting procedure does not remove or change the requirements of the insured to report the field location of FSA Farm/ Tract/Field number as provided in Para. 1211 and GSH Para. 1212.

## 1204 Inaccurate Acreage Reports

Insureds must provide all required reports and are responsible for the accuracy of all information contained in those reports.

The AIP will determine all premiums and indemnities based on the information submitted on the acreage report or upon the factual circumstances determined to have existed.

Inaccurate information reported on the acreage report can result in over- and under-reported liability.

(1) If information on the acreage report is different than what is determined to be correct and the information reported on the acreage report results in:

(a) a lower liability than the actual, correct liability determined, the production guarantee (policy protection for ARPI policies) will be reduced to an amount consistent with the information reported on the acreage report; or

(b) a higher liability than the actual, correct liability determined, the information contained in the acreage report will be revised to be consistent with the correct information.

(2) If the share is misreported and the share is:

(a) under-reported at the time of the acreage report, any claim will be determined using the share reported on the acreage report; or

(b) over-reported at the time of the acreage report, any claim will be determined using the share determined to be correct.

If an AIP discovers that an insured has incorrectly reported any information on the acreage report for any crop year, the insured may be required to provide documentation in subsequent crop years substantiating the acreage report including, but not limited to, an acreage measurement service at their own expense.

If the correction of any misreported information would affect an indemnity that was paid in a prior crop year, such claim will be adjusted, and the insured will be required to repay any overpaid amounts.

**1205-1210 (Reserved)**

## 1211 Required Elements

The following elements must be included in the annual Acreage Report (additional information for certain elements is contained in Para. 1212-1223).

| ELEMENT | REQUIRED INFORMATION |
|---|---|
| **Insured's Name, Address, and Telephone Number** | Enter the insured's name, address (Street, City, State, and Zip code), and telephone number. |
| **Insured's Identification Number** | Enter the insured's SSN, EIN or RAN and identification number type. |
| **Insured's Authorized Representative** | Enter the insured's authorized representative, if any. |
| **Policy Number** | Enter the insured's Policy Number. |
| **Person Type** | Enter the specific person type (e.g., partnership, trust, individual, corporation, etc.). |
| **Spouse's Name, Identification Number and Identification Number Type** | Enter the insured's Spouses Name, Identification Number and Identification Number Type, if applicable. |
| **Landlord/Tenant** | Enter the Landlord/Tenant whose share is being insured, if applicable. See GSH. |
| **Insured's Share** | Enter the insured's share of the crop at the time insurance coverage attaches. |
| **Name of Other Person(s) Sharing in Crop** | If applicable, enter name of other person(s) that have a share in the insured crop, this is not an SBI or a landlord/tenant policy. |
| **Crop Year** | Enter the crop year. |
| **Crop** | Enter the name of the insured crop. |
| **State and County Name** | Enter the State and County where the crop is insured. |
| **Plan of Insurance** | Enter the plan of insurance elected by the insured. |
| **Price Election, Projected price Amount of Insurance or Protection Factor** | Enter the price election, projected price, amount of insurance or protection factor elected by the insured. |
| **Coverage Level** | Enter the coverage level elected by the insured. |
| **Options, Elections or Endorsements** | Enter any options, elections or endorsements elected by the insured, when applicable. |
| **Practice** | Enter the insured crop practice for the acreage being reported. |
| **Type** | Enter the insured crop type for the acreage being reported. |
| **Unit Number** | Enter the unit number for the unit. Blank, if units are not applicable. |
| **Unit Structure Code** | Enter the unit structure code for the unit. Blank, if units are not applicable. |

| ELEMENT | REQUIRED INFORMATION |
|---|---|
| **Legal Description** | For unit determination purposes: enter the section, township and range, or other descriptions for land if rectangular survey is not applicable, such as section equivalents or FSA FN. |
| **Field Location Identification** | The insured must report field location identification for the following insurance plans under CCIP and ARPI:<br><br>•01 Yield Protection<br>•02 Revenue Protection<br>•03 Revenue Protection with Harvest Price Exclusion<br>•04 Area Yield Protection<br>•05 Area Revenue Protection<br>•06 Area Revenue Protection with Harvest Price Exclusion.<br><br>The insured can meet the acreage reporting requirement for field location identification by:<br><br>• Providing the FSA Farm, Tract, and Field Number, including the FSA administrative State and County;<br>• Clearly identifying the field location(s) and associated boundaries using AIP map-based reporting (USDA CLU or RLU) or<br>• Other mapping resources which clearly delineate the field's location.<br>• If mapping software for acreage reporting is not available, field level reporting can be accomplished by using the FSA farm, tract and field in paper copy. An insured's FSA Farm/Tract/Field Number represent the digitized CLU.<br><br>**Exception:** FSA Farm/Tract/Field number reporting is required for the following :<br><br>• acreage insured under a WA, if required by the WA as determined by the RO;<br>• units containing acreage emerging from CRP the initial year of planting and all subsequent crop years thereafter;<br>• units containing acreage being planted the initial year of new breaking and all subsequent crop years thereafter;<br>• units containing native sod acreage the initial year of planting and all subsequent crop years thereafter; or<br>• acreage insured under STAX, insurance plans 35 and 36<br><br>AIPs must display the field location identification as a map or field entry on the form. This requirement cannot be met by attaching the FSA 578 to the acreage report.<br><br>Appendix III will provide AIPs instructions for data transmission to RMA. |

| ELEMENT | REQUIRED INFORMATION |
|---|---|
| **Reported Acres/No. of Trees or Pounds** | Enter the number of acres being reported for those policies with acres. Enter the number of trees or number of pounds for those policies that require such. |
| **Approved APH Yield** | Enter the approved APH yield that applies to the acres being reported, when the approved APH yield is applicable. |
| **Date Planting Completed** | Enter the date that the insured crop was planted on the unit, see Para. 1212 below. Required for all planted acreage. |
| **Area Classification** | Enter the map area classification, if applicable. |
| **Acreage Type** | Identify applicable acreage type. See Para. 1213. |
| **Measurement Service** | Indicate whether measurement service is requested. When measurement service is requested estimated acreage must be provided. |
| **Remarks** | Document pertinent information, such as skip-row planting pattern and skip-row width when the acreage being reported is planted in a skip-row pattern. |
| **Insured's Signature and Date** | Insured must sign and date. |
| **Agent Information** | Enter Agent's name and agent code number. |
| **Agent's Signature and Date** | Agent must sign and date. |

## 1212 Date Planting Completed

### A. CCIP

The date planting is complete for CCIP policies is:

(1) For acreage planted on or before the final planting date, the last date of planting and the total acres planted.

(2) For acreage planted during the late planting period, the date of planting and the number of acres planted per day.

Failure to report the number of planted acres on a daily basis, will result in all acreage planted during the late planting period being presumed to have been planted on the last day planting took place during the late planting period. See Para. 1215 for additional late planting requirements.

### B. ARPI

The date planting is complete for ARPI policies is:

(1) For acreage planted on or before the FPD, the last date of planting and the total acres planted by that date.

(2) For acreage after the FPD, the date that the insured crop was planted. Acreage planted after the FPD is uninsurable.

## 1213 Acreage Type

### A. CCIP Acreage Types

Identify whether acreage is:

(1) Insured – Planted acreage;

(2) Insured - Acreage emerging from an USDA program the initial crop year, see Para. 1216A(2) and 1763;

(3) Insured - New breaking acreage insured in accordance with the policy (i.e., 5 percent or less of insured acreage planted in the unit) the initial crop year or insured under SP and the insured is able to substantiate the acreage has previously been in production, see Para. 1216A(3) and 1764;

(4) Insured – New breaking acreage insured in accordance with the policy or under SP and the insured is unable to substantiate the acreage has previously been in production, see Para. 1216A(3) and 1764;

**A. CCIP Acreage Types (continued)**

(5) Insured – New breaking acreage insured by WA and the insured is able to substantiate the acreage has previously been in production, see Para. 1216A(3) and 1764;

(6) Insured – New breaking acreage insured by WA and the insured is unable to substantiate the acreage has previously been in production, see Para. 1216A(3) and 1764;

(7) Insured – Native sod acreage insured under the terms of the policy, see Para. 1216A(4) and 1765;

(8) Insured – Native sod acreage insured under the terms of the SP, see Para. 1216A(4) and 1765;

(9) Insured – Native sod acreage insured by WA see Para. 1216A(4) and 1765;

(10) Insured – Short rated acreage, see Para. 1232F;

(11) Insured – Late-planted acreage, see Para. 1215;

(12) Insured – UUF/Third Party damaged acreage, see Para. 1236 and 1310H;

(13) Prevented planting, see Para. 1214;

(14) Uninsured, see Para. 1218;

(15) Uninsurable, see Para. 1217;

(16) Uninsurable due to 2nd crop provisions, see Para. 1217A(8);

(17) Uninsurable due to new breaking and the insured substantiates the acreage has been in production, see Para. 1216A(3) and 1764;

(18) Uninsurable due to new breaking and the insured cannot substantiate the acreage has previously been in production, see Para. 1216A(3) and 1764;

(19) Uninsurable due to native sod acreage not insured by SP or WA, see Para. 1216A(4) and 1765;

(20) Unreported acreage (within the same unit), see Para. 1219;

(21) Unreported units, see Para. 1219;

(22) Zero acreage report for unit, see Para. 1220; or

(23) Zero acreage report for county, see Para. 1220.

**B. ARPI Acreage Types**

Identify whether acreage is:

(1) Insured – Planted acreage;

(2) Insured - Acreage emerging from an USDA program the initial crop year, see Para. 1216B;

(3) Insured – New breaking acreage insured in accordance with the policy, or insured under SP, and the insured is able to substantiate the acreage has previously been in production, see Para. 1216B(2);

(4) Insured – New breaking acreage insured in accordance with the policy or under SP and the insured is unable to substantiate the acreage has previously been in production, see Para. 1216B(3);

(5) Insured – Native sod acreage insured under the terms of the policy, see Para. 1216B(4);

(6) Insured – Native sod acreage insured under the terms of the SP, see Para. 1216B;

(7) Uninsurable, see Para. 1217B(4);

(8) Uninsurable due to 2nd crop provisions, see Para. 1217B(4);

(9) Uninsurable due to new breaking and the insured substantiates the acreage has been in production, see Para. 1216B(3);

(10) Uninsurable due to new breaking and the insured cannot substantiate the acreage has previously been in production, see Para. 1216B(3);

(11) Uninsurable due to native sod acreage not insured by SP, see Para. 1216B(4);

(12) Unreported acreage, see Para. 1219; or

(13) Zero acreage report for county, see Para. 1220.

**1214 Prevented Planting Acreage**

See FCIC 25370 Prevented Planting Standards Handbook to determine the number of PP acres and for PP acreage reporting requirements for CCIP policies.

PP is not applicable to crops insured under ARPI.

## 1215 Late Planted Acreage

The CCIP contains the requirements for insuring acreage of an insured crop planted after the crop's final planting date. The applicable CP (including the applicable SP) may limit the late planting period and/or change the percentage that coverage is reduced per day from those specified in the CCIP. Late planted acreage is not insurable under an ARPI policy.

### A. Production Guarantee or Amount of Insurance Reductions for CCIP Policies

For each late planted acre of the insured crop, the production guarantee or amount of insurance that is applicable to timely planted acreage will be reduced for:

(1) Crops with LP periods, one percent per day for each day planted after the final planting date during the LP period, equal to 25 days, unless:

(a) the number of days is otherwise specified by the CP or SP; or
(b) the percentage reduction is otherwise specified by the CP.

(2) Acreage planted after the late planting period, or after the final planting date for crops that do not have a late planting period, by multiplying the production guarantee by the applicable PP coverage level percent, e.g., the production guarantee per acre is 90.0 bu. and the insured elected 65 percent PP coverage.

The LP production guarantee is 58.5 bu. per acre (90.0 X 0.65).

(a) The insured must have been prevented from planting the acreage by the final planting date, or during the late planting period for crops that have a late planting period, by an insurable cause that occurred within the insurance period for PP.

(b) It is the insured's option to insure this acreage.

### B. Reporting Planting Dates and Acreage

The insured must report separately all acreage planted on or before the final planting date, acreage planted per day (including the date) during the late planting period; and acreage planted after the late planting period.

The AIP must identify the acreage specified in Para. 1215A on the acreage report transmitted to RMA according to Appendix III.

### C. Premium

The premium amount for LP coverage is the same as for acreage that was planted timely. If the insured's premium (gross premium minus the subsidy) for acreage that is late planted exceeds the liability, coverage for that acreage will not be provided, no premium is due and no indemnity will be paid.

### D. Inability to Complete the Planting Method

Any acreage on which an insured cause of loss prevented completion of planting as specified in the definition of planted acreage, will be considered as late planted and will have the coverage reduced as indicated in Para. 1215A(2). For example, when seed broadcast on the soil surface cannot be incorporated into the soil, the AIP must identify such acreage on the acreage report transmitted to RMA according to Appendix III.

### E. Crop LP Guidelines

Crops with LP provisions are listed in the first column of the following chart. The second column indicates the percent the production guarantee, the final stage production guarantee for Onions and Sugar Beets, for timely planted acreage, is reduced for acreage planted during the LP period as indicated by the BP or CP. Additional limitations may be specified on the SP. The 3rd column indicates the percentage of the production guarantee that applies if the acreage was planted to the insured crop after the LP period (after the final planting date for crops that do not have a LP period) and the acreage was prevented from planting by the FPD or during the LP period, if applicable.

| **CROP LP GUIDELINES** | | |
|---|---|---|
| **The insured crop is:** | **Planted during the LP period [3]:** | **Planted after the LP period or if no LP period after final planting date and acreage was prevented from planting by FPD or during LP period, if applicable:** |
| | **The production guarantee is:** | |
| Canola/Rapeseed, Dry Beans, Dry Peas, Grain Sorghum, Hybrid Sorghum Seed, Mustard, Onions, Popcorn[4], Safflower, Silage Sorghum, Small Grains (Barley, Flax, Oats, Rye, and Wheat [1]), Soybeans, Sunflower Seed and acreage planted after the final planting date is: | Reduced **1% per day** for each day planted after the final planting date (up to a maximum of 25 days). | For Additional Coverage 60, *65, or *70% Onions limited to 35% Coverage |
| | | For CAT Coverage 60% Onions limited to 35% Coverage |
| Millet and acreage is planted after the final planting date is: | Reduced **1% per day** for the 1st 10 days and 3% per day the 11th through the 20th day after the final planting date (up to a maximum of 20 days). | For Additional Coverage 60, *65, or *70% |
| | | For CAT Coverage 60% |
| Sugar Beets[2] and acreage planted after the final planting date is: | Reduced **1% per day** for each day planted after the final planting date (up to a maximum of 25 days). | For Additional Coverage 45, *50, or *55% |
| | | For CAT Coverage 45% |
| Potatoes (Central and Southern, Northern) and acreage planted after the final planting date is: | Reduced **1% per day** for each day planted after the final planting date (up to a maximum of 25 days). | For Additional Coverage 25, *30, or *35% |
| | | For CAT Coverage 25% |

[1] Wheat or Barley acreage covered by the Winter Coverage Endorsement does not have a LP Period.
[2] LP is not available in California counties with an April 30 contract change date and a July 15 cancellation date.

| CROP LP GUIDELINES | | |
|---|---|---|
| **The insured crop is:** | **Planted during the LP period[3]:** | **Planted after the LP period or if no LP period after final planting date and acreage was prevented from planting by FPD or during LP period, if applicable:** |
| | **The production guarantee is:** | |
| Cotton, Hybrid Seed Corn and Peanuts and acreage planted after the final planting date is: | Reduced **1% per day** for each day planted after the final planting date (up to a maximum of 25 days). | For Additional Coverage 50, *55, or *60% |
| | | For CAT Coverage 50% |
| ELS Cotton and acreage planted after the final planting date is: | **No LP period,** refer to third column. | For Additional Coverage 50, *55, or *60% |
| | | For CAT Coverage 45% |
| Green Peas[4], Processing Beans[4] and Processing Sweet Corn[4] and acreage planted after the final planting date is: | **No LP period unless allowed by the SP**, if allowed, the production guarantee is reduced as indicated by the SP (up to the maximum days indicated). If no LP period indicated by SP, refer to the third column. | For Additional Coverage 40, *45, or *50% |
| | | For CAT Coverage 40% |
| Tobacco acreage planted after the final planting date is: | The production guarantee is reduced **1% per day** for the 1st 10 days and **2% per day** the 11th through the 15th day after the final planting date. If planted more than 15 days after the final planting date refer to the third column. | For Additional and CAT Coverage 35% |
| Corn and Rice after the final planting date is: | Reduced 1% per day for each day planted after the final planting date (up to a maximum of 25 days). | For Additional Coverage 55, *60, or *65% |
| | | For CAT Coverage 55% |

[3] The CP may indicate a different percentage coverage reduction and/or the CP or SP may modify the number of days contained in the late planting period.

[*] If additional levels of PP coverage are available and elected. Refer to actuarial documents to determine if additional PP coverage is available.

[4] Requires written approval from the processor by the ARD that it will accept the production from the late planted acres.

## A. CCIP

All acreage planted to the insured crop in the county in which the insured has a share is insurable if the acreage has been planted and harvested or insured (including insured acreage that was prevented from being planted) in any one of the three previous crop years. Production from insurable acreage must be reported on a Production Report and APH Database. See Part 13 and Part 15 for requirements and exceptions.

(1) Acreage that has not been planted and harvested (grazing is not considered harvested) or insured (i.e., insured acreage that failed and was appraised by an AIP would be insurable) in at least one of the three previous crop years may still be insurable if:

(a) such acreage was not planted:

(i) in at least two of the three previous crop years to comply with another USDA program;

(ii) due to a qualifying crop rotation, the acreage would not have been planted in the previous three years (e.g., a crop rotation of corn, soybeans, and alfalfa; and the alfalfa remained for four years before corn was planted again); or

(iii) because a perennial tree, vine, or bush crop was on the acreage in at least two of the three previous crop years;

(b) such acreage constitutes five percent or less of the insured planted acreage on the unit;

(c) such acreage was not planted or harvested because:

(i) it was pasture or rangeland;
(ii) the insured crop is pasture or rangeland; and
(iii) the CP, SP, or a WA specifically allows for insurance on such acreage; or

(d) the CP, SP, or a WA specifically allow insurance for such acreage.

(2) Acreage emerging from a USDA program within the two most recent crop years that is being planted to a crop for the first time since being in the USDA program is insurable under the terms of the policy. See Para. 1763 for requirements for acreage emerging from a USDA program.

(a) All acreage emerging from a USDA program must be reported as a separate line on the acreage report by FN/Tract/Field and include the applicable acreage type from Para. 1213A.

**A. CCIP (Continued)**

(b) The FN/Tract/Field for the acreage that has emerged from a USDA program must continue to be reported on the acreage report, regardless of whether it is a different crop or not. However, the initial year requirement to report acreage as a separate line item does not apply in subsequent years.

(3) New breaking acreage may be insurable or uninsurable. See Para. 1764 for new breaking acreage requirements. Report all new breaking acreage as a separate line, regardless of its insurability on the acreage report by FN/Tract/Field the initial year of planting. Any additional acreage reported for the unit containing the new breaking acreage must also report the FN/Tract/Field.

(a) The applicable acreage type must be identified on the acreage report by the applicable code. See Para. 1213A for the applicable acreage types.

(b) The FN/Tract/Field number for the new breaking acreage must continue to be reported on the acreage report in subsequent years, regardless of whether it is a different crop or not. However, the initial year requirement to report acreage as a separate line item does not apply in subsequent years.

(4) Native sod acreage may be insurable or uninsurable. See Para. 1765 and GSH Part 4 for native sod acreage requirements. Report all native sod acreage as a separate line(s), regardless of its insurability, on the acreage report by FN/Tract/Field. However, native sod acreage in multiple CLUs for a FN may be combined on a single acreage line, provided the acres for each FN/Tract/Field (CLU) are reported separately on corresponding land identification records (P27). Any additional acreage reported for the unit containing the native sod acreage must also report the FN/Tract/Field.

(a) The applicable acreage type must be identified on the acreage report by the applicable code. See Para. 1213A for the applicable acreage types.

(b) The FN/Tract/Field number for the native sod acreage must continue to be reported on the acreage report in subsequent years, regardless of whether it is a different crop or not. However, once the first four crop years of planting on the native sod acreage have been completed, the requirement to report acreage as a separate line item does not apply.

**A. CCIP (Continued)**

(5) Buffer zone acreage must be included in the organic acreage of the unit that it buffers, either transitional or certified organic acreage and reported on the same basis.

(6) Some CPs, endorsements or options (APH crops only) require that a processor contract be in effect for the crop to be eligible for insurance.

(a) There are three types of processor contracts.

(i) Acreage contracts are a processor contract that states the amount of acreage to be planted by the insured and that the processor agrees to purchase all production from this acreage meeting the requirements as stated in the contract.

(ii) Production contracts are a processor contract that states a specific amount of production to be grown by the insured and that the processor agrees to purchase all production (up to the specified amount) meeting the requirements of the contract.

(iii) A combination of acreage/production contracts. An acreage/production processor contract specifies a combination of acreage and production requirements.

Most CPs require all processor contracts to be executed no later than, and provided to the AIP, the ARD for the insured crop. Refer to the individual CP.

(b) To determine insurable acreage under a processor contract:

(i) for an acreage processor contract, specifying a minimum number of acres, maximum number of acres, or both, the insurable acreage will be:

- zero, if the insured plants less than the minimum acreage stated in the contract and the contract contains no provision that makes the processor liable to accept the production and the insured cannot provide documentation confirming that the processor will accept the lesser amount; or

- the lesser of the planted acres or maximum number of acres specified in the contract.

(ii) for a production processor contract the insurable acreage will be the planted acres.

(iii) for an acreage/production processor contract, apply A(6)(b)(i) above.

**A. CCIP (continued)**

(c) The following examples illustrate insurable acreage under a processor contract. These situations assume that the acreage is otherwise insurable under the terms of the policy and the actuarial documents (e.g., there is no uninsurable land designated in the actuarial documents).

**Example 1:** The insured has a processor contract stating that the processor will accept the production from a specific number of acres and the insured plants more than this amount. The insurable acreage will be the acreage stated in the processor contract. The remaining acreage must be reported as uninsurable.

**Example 2:** The insured has a processor contract stating a minimum number of acres and the insured fails to plant the minimum number of acres. When a minimum number of acres is specified and the contract contains no provision that makes the processor liable to accept the production and the insured fails to plant that amount, there is no contract and thus no insurable acres.

**Example 3:** The insured has a processor contract stating a maximum number of acres. If a maximum number of acres is specified, the acreage to be reported as insurable is planted acres, not to exceed the maximum. Planted acres that exceed the maximum are to be reported as uninsurable.

**Example 4:** The insured has a processor contract stating both a minimum and a maximum number of acres. If both a minimum and a maximum are specified, the same rules as stated in Example 2 and 3 above apply. For PP purposes, the minimum number of acres stated in the contract will be used if both a minimum and a maximum are specified.

**Example 5:** The insured plants more acres than are stated in the processor contract and the processor is willing to accept the production from the additional acreage. The additional acreage will be insurable and the contract can be amended to add the acres prior to or on the ARD, unless otherwise specified by the CP. If the contract is amended after the ARD, the additional acreage cannot be reported as insurable.

**A. CCIP (continued)**

**Example 6:** The processor contract does not state the insured's name. For the crop to be considered as being under contract in most instances, the processor contract must contain the name or names of each individual whose production will be accepted under the processing contract. However, in some cases a person's name may not be listed on the contract even though their share of the production is considered to be under contract by the processor. In these instances, if the AIP can verify that the production will be accepted under the processor contract, then the AIP can consider all production under this contract as insurable. Verification that the production is under contract should be documented and maintained in the insurance file.

**Example 7:** A processor contract that stipulates both the number of acres to be planted and the amount of production to be delivered is not eligible for OUs unless specified otherwise in the CP or SP. For example, Green Pea Crop Provisions state that OUs for green peas may be established based on shell type and pod type. If the AIP verifies that the processor will take all of the production from the listed acres in the processor contract, the insured acreage would be eligible for OUs.

**Example 8:** The insured must designate on the acreage report on or before the ARD, what acreage is under which contract when an insured contracts with more than one processor and plants the crop in one or more fields. For example, 10 acres in the south part of the field is covered under processor A, the 15 acres in the middle of the field is covered under processor C.

**Example 9:** All acreage specified in the contract will be insurable when the contract contains both an acreage and production figure and the AIP verifies that the processor will take all of the production from the listed acres in the processor contract, even particularly if harvested production exceeds the production listed in the contract.

**Example 10:** If the processor contract allows for an acreage tolerance, the insurable acreage would be up to the amount stated with tolerance applied. For example, if the stated acres were 100 acres with a tolerance of 5 percent, then the insurable acres could be up to 105 acres.

**B. ARPI**

The insurable acreage is all of the acreage of the insured crop, for which a premium rate is provided in the actuarial documents, in which the insured has a share, and which is planted in the county listed on the application.

(1) Acreage must have been planted and harvested (grazing is not considered harvested) or insured (excluding Rainfall and Vegetation Index policy or any other specific policy listed in the SP) in at least one of the three previous crop years unless:

(a) the acreage was not planted:

(i) in at least two of the three previous crop years to comply with another USDA program;

(ii) due to the crop rotation, the acreage would not have been planted in the previous three years (e.g., a crop rotation of corn, soybeans, and alfalfa; and the alfalfa remained for four years before corn was planted again); or

(iii) because a perennial tree, vine, or bush crop was on the acreage in at least two of the three previous crop years;

(b) the acreage constitutes five percent or less of the insured planted acreage on the unit;

(c) the acreage was not planted or harvested because it was pasture or rangeland and the insured crop is pasture or rangeland; or

(d) the CP or SP specifically allows insurance for such acreage.

(2) Acreage emerging from an USDA program (such as CRP, etc.) within the two most recent crop years that is being planted to a crop for the first time since being in the USDA program is insurable under the terms of the policy.

(a) All acreage emerging from a USDA program must be reported as a separate line on the acreage report by FN/Tract/Field and include the applicable acreage type from Para. 1213B.

(b) The FN/Tract/Field for the acreage that has emerged from a USDA program must continue to be reported on the acreage report, regardless of whether it is a different crop or not. However, the initial year requirement to report acreage as a separate line item does not apply in subsequent years.

(3) New breaking acreage may be insurable or uninsurable. Report all new breaking acreage as a separate line, regardless of its insurability on the acreage report by FN/Tract/Field the initial year of planting.

**B. ARPI (Continued)**

(a) The applicable acreage type must be identified on the acreage report by the applicable code. See Para. 1213B for the applicable acreage types.

(b) The FN/Tract/Field number for the new breaking acreage must continue to be reported on the acreage report in subsequent years, regardless of whether it is a different crop or not. However, the initial year requirement to report acreage as a separate line item does not apply in subsequent years.

(4) Native sod acreage may be insurable or uninsurable. See GSH Part 4 for native sod acreage requirements. Report all native sod acreage as a separate line(s), regardless of its insurability, on the acreage report by Farm/Tract/Field. However, native sod acreage in multiple CLUs for a FN may be combined on a single acreage line, provided the acres for each FN/Tract/Field (CLU) are reported separately on corresponding land identification records (P27). Any additional acreage reported for the unit containing the native sod acreage must also report the FN/Tract/Field.

(a) The applicable acreage type must be identified on the acreage report by the applicable code. See Para. 1213B for the applicable acreage types.

(b) The FN/Tract/Field number for the native sod acreage must continue to be reported on the acreage report in subsequent years, regardless of whether it is a different crop or not. However, once the first four crop years of planting on the native sod acreage have been completed, the requirement to report acreage as a separate line item does not apply.

## 1217 Uninsurable Acreage

**A. CCIP**

Uninsurable acreage includes acreage:

(1) on which the only crop that has been planted and harvested in the previous three crop years is a cover crop, hay (except wheat for hay) or a forage crop (except corn or sorghum silage). However, such acreage may be insurable if:

**A. CCIP (Continued)**

(a) the insured crop is a hay or forage crop; and
(b) the CP, SP or a WA specifically allow for insurance on such acreage; or
(c) the hay, or forage crop is used in a crop rotation;

(2) that has been strip-mined unless:

(a) an agricultural commodity other than a cover crop, hay (except wheat harvested for hay) or forage crop (except insurable silage) has been harvested from the acreage for at least five crop years after the strip-mined land has been reclaimed; or

(b) a WA specifically allows insurance for such acreage;

(3) for which the actuarial documents do not provide the information necessary to determine the premium rate, unless insured by a WA that provides such information;

(4) that was damaged and it is practical to replant the insured crop but it was not replanted (insurance did not attach);

(5) that is inter-planted with another crop, unless allowed by the CP;

(6) on which insurance is otherwise restricted by the CP or SP;

(7) that is planted in any manner other than specified by the CP or SP unless insurance is permitted for such planting by a WA;

(8) of a second crop, if the insured elected not to insure such acreage when an indemnity for a first insured crop may be subject to a reduction in accordance with the provisions of BP section 15 and the insured intends to collect an indemnity payment that is equal to 100 percent of the insurable loss for the first insured crop acreage see Para. 1223;

(9) of a crop planted following a second crop or following an insured crop that is prevented from being planted after a first insured crop, unless it is a practice that is generally recognized by agricultural experts or organic agricultural experts for the area to plant three or more crops for harvest on the same acreage in the same crop year, and additional coverage insurance provided under the authority of the Act is offered for the third or subsequent crop in the same crop year;

(10) that is a volunteer crop;

(11) of a second planting of the same crop when the first planting has been harvested in the same crop year unless specifically permitted by the CP or SP;

(12) that is planted for the development of production of Hybrid Seed or for experimental purposes, unless insurance is permitted for such purposes by the CP or by WA;

**A. CCIP (Continued)**

(13) used solely for wildlife protection or management;

(14) initially planted after the final planting date unless late planting coverage is provided by the crop's policy; and

(15) that is not grown on planted acreage (except for the purposes of PP coverage), or that is a type, class or variety or where the conditions under which the crop is planted are not generally recognized for the area. For example, where agricultural experts determine that planting a NI corn crop after a failed small grain crop on the same acreage is not a generally recognized practice for the area.

**B. ARPI**

The following acreage is not insurable under the ARPI plan of insurance:

(1) acreage where the crop was destroyed or put to another use during the crop year for the purpose of conforming with, or obtaining a payment under, any other program administered by the USDA;

(2) acreage where the AIP has determined the insured failed to follow good farming practices for the insured crop;

(3) acreage where the conditions under which the crop is planted are not generally recognized for the area;

**Example:** Acreage where agricultural experts determine that planting a NI corn crop after a failed small grain crop on the same acreage in the same crop year is not appropriate for the area.

(4) acreage of a second crop, if the insured elected not to insure such acreage when an indemnity for a first insured crop may be subject to a reduction in accordance with the provisions of ARPI, Section 13 and the insured intends to collect an indemnity payment that is equal to 100 percent of the insurable loss for the first insured crop acreage. The election must be made for all first insured crop acreage that may be subject to an indemnity reduction if the first insured crop is under ARPI or on a first insured crop unit basis if the first insured crop is not insured under ARPI (e.g., if the first insured crop insured under ARPI consists of 40 acres, or the first insured crop unit insured under another policy contains 40 planted acres, then no second crop can be insured on any of the 40 acres). In this case:

(a) if the first insured crop is insured under ARPI, the insured must provide written notice to the AIP of the election not to insure acreage of a second crop by the ARD for the second crop if it is insured under ARPI, or before planting the second crop if it is insured under any other policy;

**B. ARPI (continued)**

(b) if the first insured crop is not insured under ARPI, at the time the first insured crop acreage is released by the AIP or another AIP who insured the first insured crop (if no acreage in the first insured crop unit is released, this election must be made by the earlier of acreage reporting date for the second crop or when the insured signed the claim for the first insured crop);

(c) if the insured fails to provide notice required in (a) and (b) above, the second crop acreage will be insured in accordance with applicable policy provisions and the insured must repay any overpaid indemnity for the first insured crop;

(d) in the event a second crop is planted and insured with a different AIP, or planted and insured by a different person, the insured must provide written notice to each AIP that a second crop was planted on acreage on which the insured had a first insured crop; and

(e) the insured must report the crop acreage that will not be insured on the applicable acreage report;

(5) acreage of a crop planted following a second crop or following an insured crop that is prevented from being planted after a first insured crop, unless it is a practice that is generally recognized by agricultural experts or organic agricultural experts for the area to plant three or more crops for harvest on the same acreage in the same crop year, and additional coverage insurance provided under the authority of the Act is offered for the third or subsequent crop in the same crop year. Insurance will only be provided for a third or subsequent crop as follows:

(a) the insured must provide acceptable records that show:

(i) the insured has produced and harvested the insured crop following two other crops harvested on the same acreage in the same crop year in at least two of the last four years in which the insured produced the insured crop; or

(ii) the applicable acreage has had three or more crop produced and harvested on it in the same crop year in at least two for the last four years in which the insured crop was grown on the acreage; and

(b) the amount of the insurable acreage will not exceed 100 percent of the greatest number of acres for which the insured provides acceptable records.

## 1218 Uninsured Acreage of an Insured Crop

Uninsured acreage of an insured crop only applies to CCIP policies and includes:

(1) insurable acreage on land classified as high-risk land excluded with a High-Risk Land Exclusion Option; and

(2) acreage of Category C crops that does not meet age and/or production minimums that is excluded.

## 1219 Unreported Acreage or Units

Unreported acreage is insurable acreage not reported timely, or not reported, and does not meet the criteria to be reported as insured acreage on a revised acreage report, see Para. 1231.

Unreported units, when units are applicable, are units which were not reported timely, or not reported, for which the AIP denies liability.

### A. Unreported Units (Unreported Acreage Insured as a Separate Unit)

For acreage that would be insured as a separate unit:

(1) if the acreage and all other reported unit(s) for the crop meet the requirements for accepting acreage as outlined in LAM Para. 733, revise the acreage report to add the unreported unit acreage.

(2) if the acreage or any other reported unit(s) for the crop does not meet the requirements for accepting acreage:

(a) the acreage report will not be revised, and

(b) the harvested or appraised production from the unreported unit acreage will be prorated to all insured units if an indemnity is claimed on any unit, (refer to LAM).

(3) when there may be damage on other reported units and the unreported unit will not be added for this reason:

(a) appraise the unreported unit acreage (that could have been insured) if it has not been harvested, and

(b) it appears that it will not be harvested. This appraisal will be used if a claim is filed on any insured unit as outlined in the LAM.

**B. Unreported Acreage in a Reported Unit**

If acreage (including the reported acreage for that unit):

(1) meets the requirements for accepting acreage as outlined in the LAM, revise the acreage report to add the under reported acreage to the unit.

(2) does not meet the requirement for accepting acreage as outlined in the LAM, the:

(a) guarantee will be computed on the information reported, and
(b) production from the unreported acreage will count against the guarantee.

**C. Late Planted Unreported Acreage**

Acreage which the insured did not report or designate (even as uninsured acreage), and which the insured asserts was planted after the FPD (or LPD, if applicable) will be handled according to (1) and (2) below.

(1) Insurable (but not insured) acreage will be considered insurable (but not insured) if:

(a) The acreage is insurable under the actuarial documents or by a WA; i.e., rates and coverage are available for the acreage itself, or crop P/T; and

(b) The acreage was planted on or before the:

(i) FPD for the crop shown on the SP for the applicable county, or

(ii) latest allowable date under the LP provisions found in the applicable CP, if applicable to the crop, and the acreage was not prevented from planting.

(2) Acreage will be considered uninsurable if the acreage is not insurable under the policy provisions, SP, actuarial documents, or by WA. Acreage is not insurable if:

(a) rates and coverage are not available for the acreage itself or the crop/P/T carried out; or

(b) the acreage was initially planted after the LPP (FPD if LPP is not applicable) and the acreage was not prevented from planting by an insurable cause of loss within the insurance period for PP.

**1220 Zero Acreage Report**

The insured must submit a zero acreage report for the county on or before the ARD if the insured does not have a share in the insured crop in the county.

If the insured crop is not planted on an entire unit, the insured must report zero acres on a unit, if units are applicable.

## 1221 Preliminary Acreage Reports for CCIP

AIPs may request planting intentions from the insured at the time of Application or when servicing the policy for subsequent crop years (e.g., updating the APH). Information generated from the preliminary acreage report must be issued to each insured no earlier than 30 days prior to the final ARD.

AIPs must provide the insured with instructions to verify the accuracy of their preliminary acreage report and to submit any corrections or additions to the AIP by the final ARD.

If the insured submits nothing further by the final ARD, coverage is based on the preliminary acreage report and is considered complete and accurate provided all the necessary elements to meet the requirements of an acceptable acreage report are included. If liability is under or over-reported, the liability and any potential indemnity may be impacted unless the insured has requested acreage measurement service, see Para. 1234.

Preliminary acreage reports are not applicable for PP reporting purposes. See FCIC 25370 Prevented Planting Standards Handbook for intended acreage report instructions for PP.

## 1222 Reporting IRR Practices for CCIP

AIPs shall provide a copy of the Irrigated Practice Guidelines to all insureds annually for whom the IRR practice may apply. The Irrigated Practice Guidelines identify factors to be considered in determining the proper acreage to be reported and insured under an IRR practice. See Para. 1101-1106 for IRR practice requirements and the DSSH for the Irrigated Practice Guidelines.

## 1223 First (1st) Insured Crop Planted and Second (2nd) Crop

### A. 1st Insured Crop Limitations

1st insured crop limitations may apply to acreage planted to a 1st insured crop which has suffered an insurable loss. This excludes acreage that qualifies for double cropping. See LAM for more information on double cropping.

An insured that does not plant, or plants and does not insure, a 2nd crop on the same acreage for harvest in the same crop year as a first insured crop may:

(1) collect an indemnity payment that is equal to 100 percent of the insurable loss for the 1st insured crop, and

(2) elect not to insure 2nd crop acreage on the same acreage, even if the insured has a policy for a 2nd crop. This is considered uninsurable acreage, see Para. 1217 for acreage reporting requirements of such acreage.

**B. 2nd Insured Crop Limitations**

When the person insuring the 1st crop, or another person, plants and insures a 2nd crop on the same acreage for harvest in the same crop year and there is an insurable loss to the second crop, a full indemnity may be paid on the 2nd crop.

(1) Indemnity payment is limited to 35 percent of the insurable loss for the 1st insured crop. The person insuring the 1st crop will be responsible for 35 percent of the 1st crop's premium.

(2) If the 2nd crop does not suffer an insurable loss, an indemnity payment, if applicable, for the other 65 percent of the 1st crop's insurable loss that was not previously paid will be made and the remainder of the premium will be due.

A subsequent crop, such as a 3rd crop, planted on the same acreage does not limit an indemnity being paid on the 2nd crop.

**C. 3rd and Subsequent Insured Crop Limitations**

Acreage of a crop planted following a 2nd crop or acreage of a crop planted following a prevented planted 2nd insured crop which followed an insured 1st crop is not insurable unless:

(1) it is generally recognized for the area to plant three or more crops for harvest on the same acreage in the same crop year by agricultural experts or organic agricultural experts;

(2) additional coverage is offered for the 3rd or subsequent crop; and

(3) the insured provides acceptable records that demonstrate:

(a) the insured has produced and harvested the insured crop following two other crops harvested on the same acreage in the same crop year in at least two of the last four years in which they produced the insured crop; or

(b) the applicable acreage has had three or more crops produced and harvested on it in at least two of the last four years in which the insured crop was grown on it.

The amount of insurable acreage for the 3rd or subsequent crop will not exceed the greatest number of acres for which the insured provided the records required in the applicable preceding [subparagraph (3)(b)].

**D. General Information**

(1) A 2nd crop does not include replanting of 1st crop acreage to the same 1st crop, except as stated in the LAM Para. 721A or B.

(2) Forage production and other insured perennial crops are considered a 1st insured crop. Although forage and other perennial crops may not be planted each year, they are the 1st insured crop.

(3) If an insured plants and insures skip-row cotton, it fails, and grain sorghum is planted in the rows that were not planted to cotton, the grain sorghum is still considered the 2nd crop for this acreage.

(4) The 1st insured/2nd crop rules apply to certified seed potatoes and malting barley the same as they do to other crops such as regular potatoes and the all others type barley.

(5) AIPs should make insureds aware that an insured's election not to insure acreage of a 2nd crop may affect any linkage requirement for FSA program participation.

(6) When an insured elects to not insure 2nd crop acreage, the acreage and production from such acreage is not included for APH purposes for subsequent years except when it is commingled with production from insured acreage.

**E. Insured's Options**

(1) Not plant a 2nd crop on the same acreage for harvest in the same crop year and receive 100 percent of indemnity due for the 1st insured crop acreage.

(2) Plant, but not insure a 2nd crop planted on the same acreage as the 1st insured crop was planted for harvest in the same crop year. For this situation, the following applies:

(a) This decision is on a unit basis. If the insured has multiple units of the 1st insured crop, the election to insure 2nd crop acreage is made separately for each of the 1st insured crop units and applies to all 2nd crop acreage in the unit, unless double-cropping provisions apply in which case, the 2nd crop acreage meeting the double-cropping-history requirements must be insured.

**E. Insured's Options (Continued)**

**Example:** Insured's Unit 0001-0001OU corn = 150 acres of 1st insured crop corn, 50 of which suffers an early loss and is released. Insured plans to plant 2nd crop on acreage. Unit 0001-0001OU soybeans = 250 acres of planted soybeans consisting of 200 1st insured crop acres and 50 2nd crop acres (same 50 acres that corn was planted in corn unit 0001-0001OU). The insured timely elects to not insure the 50 acres of 2nd crop acreage in unit 0001-0001OU soybeans. Insured's Corn Unit 0001-0002OU = 175 acres of 1st-insured crop corn, 20 of which suffers an early loss. Unit 0001-0002OU soybeans = 250 acres of planted soybeans consisting of 230 1st crop acres and 20 of 2nd crop acres (same 20 acres that corn was planted on in corn unit 0001-0002OU). However, the insured timely elects to insure the 20 acres of 2nd crop acreage in unit 0001-0002OU soybeans.

(b) Election to not insure 2nd crop acreage must be made by the following deadline:

(i) if the 1st insured crop is insured under the CCIP, at the time the 1st insured crop acreage is released (if no acreage is released, on the earlier of the ARD for the 2nd crop or when claim is signed for the 1st insured crop);

(ii) if the 1st insured crop and the 2nd crop are both insured under ARPI, by the ARD for the 2nd crop; or

(iii) if the 1st insured crop is insured under ARPI and the 2nd crop is insured under the CCIP, before the 2nd crop is planted.

(c) The insured will collect 100 percent of indemnity due for the 1st insured crop acreage, provided:

(i) Written notice is provided, signed, and dated by the insured to the AIP stating that the insured elects not to insure acreage of a 2nd crop by the deadline for the specific situation stated in subparagraphs B (2) (b) (i), (ii), or (iii) above. A Written Notice can be considered a statement on: (1) the Production Worksheet (PW), (2) an attachment to the PW (e.g., Special Report), or (3) a form developed by the AIP for this purpose that states the insured elects to not insure the 2nd crop.

**E. Insured's Options (Continued)**

(ii) If the insured fails to provide notice of his or her election to not insure 2nd crop acreage by the deadline for the specific situation stated in subparagraphs E(2)(b) (ii), or (iii) above, the 2nd crop acreage will be insured in accordance with policy provisions (the same as (3) below), and the insured must repay any overpaid indemnity for the 1st insured crop.

(A) Situation 1

| IF: | AND: | THEN |
|---|---|---|
| If the insured had control of the land (owns or leases the land for the entire crop year), | 1 timely elected in writing **not to** insure any 2nd crop acreage, and<br><br>2 subsequently plants and reports 2nd crop acreage as insured crop acreage, | the acreage report must be revised to designate the 2nd crop acreage as uninsured acreage instead of insured acreage.<br><br>This is because the insured had previously elected not to insure the 2nd crop acreage. |

(B) Situation 2

| IF: | AND: | THEN |
|---|---|---|
| If insured A has elected in writing that a 2nd crop will not be insured on the same acreage as the 1st insured crop was planted, and does not own or have control of the land | 1 someone else (insured B) plants an insured crop (2nd crop) on that same acreage; and<br><br>2 the second crop acreage contributed to the losses on the units for both the 1st insured crop, and the 2nd crop, and<br><br>3 insured B receives an indemnity on the unit in which the 1st insured-crop acreage was planted, | insured A will be limited to 35% indemnity on the 1st crop acreage.<br><br>This is because a 2nd crop was planted on the 1st crop acreage on which insured B collected an indemnity. |

**E. Insured's Options (Continued)**

(d) The insured must designate the 2nd crop acreage planted on 1st insured-crop acreage (within the same crop year) that will not be insured as uninsured acreage on the acreage report.

(3) Plant and insure the 2nd crop on the same acreage (as the 1st insured crop was planted) for harvest in the same crop year. For this situation, the following applies:

(a) if the 2nd crop acreage is planted and insured with a different AIP, the insured must provide written notice to each AIP that a 2nd crop was planted on acreage on which the insured had a 1st insured crop.

(b) if there is an insurable loss on the 2nd crop acreage and the insured has not waived the indemnity for the 2nd crop acreage, the insured will:

(i) receive 100 percent of the indemnity due for the 2nd crop acreage. The insured will pay the full premium (producer-paid premium) for the 2nd crop acreage. Subsequent crops planted on the same acreage within the same crop year will not affect the indemnity of the 2nd crop acreage;

(ii) collect an indemnity payment that is 35 percent of the insurable loss for the 1st insured-crop acreage;

(iii) owe 35 percent of the premium (producer-paid premium) for the 1st insured-crop acreage having a 2nd crop planted on it;

(c) if the insured's option was to plant 2nd insured crop acreage but:

(i) no crop is planted,
(ii) the acreage is planted to a crop not insured, or
(iii) the insured 2nd crop acreage does not suffer an insurable loss,

the following applies:

(A) the insured should request to receive the remainder (65 percent) of the 1st insured-crop indemnity that was not previously paid. However, if the insured does not request such payment, the AIP should contact the insured for follow-up to determine the status of any 2nd crop. For most situations, this should be done on or before the billing date for the 1st insured crop.

(B) if the insured certifies there is no 2nd crop loss on the same acreage on the 1st insured-crop unit, or the AIP otherwise verifies there is no 2nd crop loss, then:

**E. Insured's Options (Continued)**

1 the remainder (65 percent) of the 1st insured-crop indemnity must be paid to the insured, and

2 if the entire premium is not offset by the indemnity, a bill for the remaining premium is sent.

Payment of the indemnity should be made in accordance with the 30-day provisions in the policy, unless the AIP is unable to verify whether an insured loss occurred to the 2nd crop. It is the insured's responsibility to provide sufficient documentation to the AIP.

(C) the insured does not have the option to avoid payment of the additional premium for the 1st insured crop by refusing the remaining 65 percent of the indemnity owed for the 1st insured crop.

(D) AIPs may make payment of the additional indemnity for the 1st insured crop before announcement of the harvest price for revenue plans of insurance, or they may choose to wait until after the announcement to avoid making two additional payments.

(d) Separate records of production

(i) If the 1st insured crop suffers a loss, the insured must provide separate records of production for all insured crops planted on the same acreage as the 1st insured crop. Those records acceptable for loss adjustment purposes are acceptable as documentation for separate production from acreage that is and is not planted to a 2nd crop.

**Example:** The insured has an insurable loss on 100 acres of wheat and subsequently plants cotton on 10 acres of that wheat acreage. The insured must provide records of the wheat and cotton production on those 10 acres separate from any other wheat and cotton production that may be planted in the same unit.

(ii) If the insured fails to provide separate records, the production of each crop will be allocated to the acreage in proportion to the liability of the acreage.

**F. Possible Impacts on Companion Contracts**

It is possible when different insureds share an insurable interest on the same acreage that one insured might have a greater loss amount on the 1st insured-crop acreage, while the other insured has a greater loss amount on the insured 2nd-crop acreage. Different levels of coverage, different APHs, or different insurance plans, etc., between landlords, tenants or other sharing parties may cause this situation to occur. The following scenarios illustrate this.

**Scenario 1:** Both the landlord and the tenant have insurance policies in effect for both the 1st insured and 2nd crops and neither qualify for double-crop exemption. One insured has CAT level of coverage, while the other has additional coverage.

| **LANDLORD'S 1st INSURED CROP** | | **TENANT 1st INSURED'S CROP** | | |
|---|---|---|---|---|
| CAT Policy | No Loss | Buy-up Policy | $10,000 Loss | 35% = $3,500 |
| **LANDLORD INSURED 2nd CROP** | | **TENANT INSURED 2nd CROP** | | |
| Buy-up Policy | $10,000 Loss | CAT Policy | No Loss | |

The landlord did not have a 1st insured crop loss. Therefore, the landlord would not have the option to decline insurance on the 2nd crop. Even though the tenant did not have an insured 2nd crop loss, the landlord did. The tenant would be restricted to $3,500 (35 percent of the 1st insured crop loss) if the landlord accepted the $10,000 2nd crop indemnity.

**Scenario 2:** The landlord and tenant will each receive at least 35 percent of their insured share of any 1st insured crop loss. Each would have the option to waive insurance on the 2nd crop acreage.

| **LANDLORD'S FIRST 1st CROP** | | | **TENANT'S FIRST 1st CROP** | | |
|---|---|---|---|---|---|
| CAT Policy | $500 Loss | 35% = $175 | Buy-up Policy | $10,000 Loss | 35% = $3,500 |
| **LANDLORD INSURED 2nd CROP** | | | **TENANT INSURED 2nd CROP** | | |
| Buy-up Policy | $10,000 Loss | | CAT Policy | $500 Loss | |

**F. Possible Impacts on Companion Contracts (Continued)**

Prior to knowing the outcome of the 2nd crop, each may have been given the opportunity to request the AIP to calculate and then pay the greatest possible indemnity for both crops as allowed by the policy provisions (refer to item A (8) above). In certain situations, this may mean waiving a 2nd crop indemnity in order to be eligible for the remaining 65 percent 1st insured crop indemnity.

However, once any entity is indemnified for an insured 2nd crop loss on the same acreage, all entities with an insurable interest in the1st insured crop will be limited to 35 percent of their insured share of any payable loss. Precedence is based on whether any insured accepts a 2nd crop indemnity. If the landlord is indemnified ($10,000) for their 2nd crop loss, the greatest possible indemnity allowed by the policy provisions for the tenant from both crops would be $4,000 ($3,500 which is 35 percent of their insured share of the 1st insured crop loss plus $500 from the 2nd crop).

Thirty-five percent (35 percent) of any 1st insured crop indemnity plus any insured 2nd crop indemnity is the greatest possible indemnity outcome allowed by the policy provisions for all insured entities sharing in the 1st insured crop if any entity accepts an indemnity on the 2nd crop acreage.

**G. Additional Information About Reduction of Payments and Premium due to 2nd Crop**

Except in the case of double cropping as described in the LAM, the following applies:

(1) Another Person Plants 2nd Crop Acreage

(a) Even if another person plants a 2nd crop on acreage where the 1st insured crop was planted and suffered a loss and the 2nd crop is insured and suffers an insurable loss, the indemnity payment for the 1st insured crop acreage will be 35 percent of the indemnity due for the 1st insured crop acreage.

**Example:** Insured AA plants corn and receives an indemnity. Insured AA then cash rents this acreage to Insured ZZ who plants insured soybeans on this same acreage. Insured AA must notify his/her AIP and must notify Insured ZZ's AIP that a 2nd crop was planted on acreage on which he/she (Insured AA) had a 1st insured crop.

**G. Additional Information About Reduction of …. due to 2nd Crop (Continued)**

(b) If the 1st insured crop is planted, is shared with another person or other people, and the crop suffers a loss, each of the shareholders can decide whether they want to insure a 2nd crop that is planted on the same acreage independently of each other. However, if the 2nd crop suffers a loss and the person or any one of the people who chose to insure the 2nd crop accepts their indemnity check, the 1st insured crop indemnity will be limited to 35 percent for all shareholders.

(c) If the 1st insured crop acreage was planted acreage and the 2nd crop acreage does not suffer a loss or is not insured, 100 percent of indemnity of the 1st insured crop acreage will be applicable.

(d) For prevented planting, refer to the FCIC 25370 Prevented Planting Standards Handbook.

(2) 1st Insured Crop Acreage that is Cash Rented by Another Person Who Plants a Crop on this Acreage

(a) Cash rent, as used in this paragraph means cash renting for agricultural use (growing a crop, haying, grazing, etc.). This does not apply when the acreage is cash rented for a non-agricultural use; e.g., hunting.

(b) The crop that is planted by the person cash renting the acreage is considered the 2nd crop for both the person having the 1st insured crop, and is also considered the 2nd crop for the person that cash rented the acreage and planted a crop on this acreage.

(c) Another person planting the 2nd crop cannot choose not to insure the acreage if the 2nd crop is an insurable crop and that person has an active policy for this crop in the county. This is because only the insured that had the 1st crop indemnity may elect to not insure any 2nd crop acreage to preserve 100 percent of his/her 1st crop indemnity.

**1224-1230 (Reserved)**

## Section 3 Acreage Report Revisions

### 1231 Overview

If incorrect, the acreage report may be revised when allowed under these procedures.

A revised acreage report is permitted when the criteria in Para. 1232 is met in following situations:

(1) the insured files a request for a revision, on a unit basis when units are applicable.

(2) the AIP may file a revised acreage report to correct a keying error on the original acreage report, improper unit division to delete uninsurable acreage reported as insurable acreage, and so on, provided the revision falls within the allowed parameters outlined in this section.

### 1232 Acceptable Revisions for CCIP

**A. Acreage Report Revision Guidelines**

Acreage reports may only be revised if one of the following is applicable.

(1) If it is on or before the applicable final ARD, insureds may revise acreage reports for planted acres without a crop inspection and AIP approval. See C below for requirements.

(2) If it is after the applicable final ARD, insured cannot revise an acreage report except:

(a) as expressly permitted by the policy:

(i) if the insured requests acreage be short rated and the provisions in the CP are met, the acreage report will be revised to designate the short rated acres separately (see F); or

(ii) if the insured requests measurement service on or before the ARD and such measurement service results in a different acreage determination, the acreage report will be revised to reflect the determined acres. See Para. 1234; or

(b) with consent of AIP. AIPs may only provide consent when the AIP determines:

(i) a cause of loss has not occurred and an appraisal indicates the crop will produce at least 90 percent of the yield used to determine the guarantee or amount of insurance for the unit (including reported and unreported acreage), except when there are unreported units. See Para. 1219 for additional information regarding acceptance of unreported units];

(ii) information on the acreage report is clearly transposed; or

(iii) adequate evidence is provided that the AIP or someone from USDA has committed an error regarding information on the acreage report.

**A. Acreage Report Revision Guidelines (continued)**

(3) If the revision is to include unreported units and/or unreported acreage, the revision may be made at any time; however, this acreage is not considered insurable unless it meets the requirements in 2(b) above. Such acreage must be identified as unreported units and/or unreported acreage on the acreage report.

(4) If an acreage report is initially submitted for PP acreage, it cannot be revised at any time to change crops or types. After the applicable ARD, information on the acreage report for PP acres cannot be revised, except for (2)(b)ii and iii above.

**B. Acreage Report Revisions Requirements**

All acreage report revisions require:

(1) documentation in the "Remarks" section of the acreage report, or other form specified by the AIP to revise acreage reports, explaining why the revision took place and what change(s) were made (if a form was used to document, or notate; see attached (Form Number) in the "Remarks" section of the acreage report;

(2) date, signature, and code number of the person preparing the revised acreage report or other form designated by the AIP to revise acreage reports;

(3) insured's signature, or authorized representative's signature, and date, unless circumstances warrant the absence of the required signature. If the insured's signature is not obtained, document why the signature was not obtained in the "Remarks". Based on the nature of the revision and the reasons the insured's signature was not obtained, the AIP will determine whether the revised acreage report should be approved without the insured's signature; for example, correcting keying errors would not require the insured's signature.

For CAT coverage only: Unless a person with an insurable interest in the crop objects in writing on or before the ARD and provides a signed acreage report on his or her own behalf, the operator may file/sign the acreage report for all other persons with an insurable interest in the crop, including a revised acreage report. A POA is not required and all other persons with an insurable interest in the crop, and for whom the operator purports to sign for and represent, are bound by the information contained in that acreage report.

**B. Acreage Report Revisions Requirements (Continued)**

If the insured's signature is not obtained, document why the signature was not obtained. Based on the nature of the revision and the reasons the insured's, or authorized representative's signature was not obtained, the AIP will determine whether the revised acreage report should be approved without the insured's, or authorized representative's, signature. For example, correcting keying errors would not require the insured's, or authorized representative's signature; and

(4) for acreage reports revised after the final ARD, the AIP's authorized representative's approval.

**C. Revised Acreage Reports On or Before the ARD**

(1) Acreage reports for a planted crop may be revised on or before the ARD when information that affects the guarantee, premium, or liability for the crop was incorrectly reported. No crop inspection or approval is required when revisions are filed BEFORE the ARD.

(2) Acreage reports for a PP crop may be revised on or before the ARD to change any information on any initially submitted acreage report. For example, the insured can add acreage of the insured crop prevented from planting, or to correct a share.

**Exception:** The insured CANNOT revise the insured's initially submitted acreage report AT ANY TIME, and the AIP cannot approve, to change the insured crop or type that was reported as prevented from planting on the acreage report, unless the insured can provide adequate evidence that the insured did report the correct crop or type, but the AIP, agent, or someone from the USDA committed an error regarding the crop or type shown on the processed acreage report.

Refer to the PP LASH for examples of revised acreage reports for PP acreage.

**D. Revised Acreage Reports After the ARD**

(1) Acreage reports for planted acres may be revised after the ARD ONLY with the AIP's consent (i.e., approval) as follows.

(a) The AIP can provide consent for a revised acreage report if:

(i) No cause of loss has occurred. When insureds request revisions to reduce acres, AIPs can provide consent as stated in subparagraph E(8) below;

**D. Revised Acreage Reports After the ARD (Continued)**

(ii) The unit passes the crop inspection criteria for accepting unreported acreage information; for example, adding acreage or units, as stated in the LAM; or

(iii) A crop inspection is not needed to revise the acreage report as stated in subparagraph E below.

(b) Acreage reported as an IRR practice that qualifies for an IRR practice at the time insurance attaches, cannot be revised to a NI practice, even when the insured never applied any irrigation water. When a loss is evident on the unit or when harvest is general in the area, unless D(1)(c) or E below applies. The LAM provides procedure that applies when acreage cannot be revised from IRR to NI and when acreage does not qualify for an IRR practice.

(c) When the insured has reported both an IRR and NI practice and claims there is an error in the reported acreage of IRR and/or NI practices, a revised acreage report may be approved to change a NI practice to an IRR practice (acreage must qualify for an IRR practice) or IRR may be revised to a NI practice), provided:

(i) no damage or loss has occurred,

(ii) harvest is not general in the area, and

(iii) the AIP has verified that the practice for which the change was requested actually existed and is being carried out in a manner consistent with a good farming practice for the practice that the acreage is being revised.

(2) For revisions to the acreage report for PP Acreage, refer to the PP LASH.

**E. When Acreage Report Revisions Can Be Done Without a Crop Inspection**

Acreage reports may be revised to add or revise information on a crop unit without crop inspections for the following situations and a LAF is ONLY applicable to misreported information on the revised acreage report:

(1) Short-rated acreage (refer to subparagraph F below);

(2) Measurement service requested by the date specified in Para. 1234;

**E. When Acreage Report Revisions Can Be Done Without a Crop Inspection (Cont.)**

(3) The crop is replanted to a different P/T than was initially reported and that is specified on the actuarial documents; e.g., initially planted oil-type sunflowers, and replanted to non-oil type, unless specified otherwise in the CPs or SPs. The same acres as were shown on the initial acreage report would be shown on the revised acreage report, unless the insured requested that additional acreage be added, which would then require a crop inspection.

(4) Keying errors of the acreage report caused an incorrect Summary of Insurance to be issued;

(5) Incorrect unit arrangement has been reported;

(a) Two or more OUs must be combined anytime separate records of production and acreage are not maintained. (Refer to Commingled Production, in the LAM).

(b) Part of a unit or an entire unit may be deleted.

(c) Additional units may not be created after the ARD, except for basic/policy units. Basic units are defined by the BP; or if, applicable, the CP or SP. BUs must be separated even if damage has occurred on the unit.

(6) The insured provided evidence that the agent, AIP or someone from USDA has committed an error regarding the information on the insured's acreage report. Following are some, but not limited to, items and documents from which the agent or AIP could make an error when transferring information from the document to the acreage report and which would substantiate that an error was made:

(a) approved APH yield from the APH database.

(b) information from an approved WA.

(c) information from actuarial documents; e.g., the actuarial map was incorrectly read resulting in an incorrect classification, and so forth.

(d) a document the insured claims he or she completed and submitted to the AIP to report the original acreage report information. The acreage report may be revised to agree with the information on this document provided the AIP can substantiate that this document was on file in with the AIP on or prior to the ARD.

**E. When Acreage Report Revisions Can Be Done Without a Crop Inspection (Cont.)**

(e) a document the insured claims he or she completed and submitted to the AIP to report the skip-row planting pattern for the planted crop/unit. The percent planted factor and/or yield-conversion factor may be revised to agree with the information shown on this document, provided the AIP can substantiate that this document was on file with the AIP on or prior to the ARD.

(f) the information on the acreage report is clearly transposed; e.g., 87.0 is written as 78.0. Also, refer to subparagraph E(9) below for transposition of information between acreage report lines that are also correctable.

(7) Any other reasons specified in the policy provisions, including those shown in subparagraph E(1), F, and Para. 1234.

(8) Acreage has been over reported:

(a) When an insured requests a decrease in reported acres of a unit, the acreage report may be revised to remove those acres, provided:

(i) at the time the insured requests a decrease in reported acreage, no cause of loss has occurred;

(ii) all units of the crop for which the revision is NOT requested must have existing acceptable determined acres, as defined in the LAM; and

(iii) for the unit for which the insured has requested a decrease in acres the insured must, at his or her expense have a current measurement of the unit acreage done by FSA or a disinterested firm whose primary function is land measurement.

(b) Document the acceptable determined and measured acreage on a form used for documentation purposes or aerial photo map.

(c) Insured's request to reduce acres is not the same as automated revisions that occur during claims processing to adjust over-reported liability. However, in both cases, the premium due is based on what actually exists; e.g., less acres actually exist than reported.

(9) Correctable transposition acreage report errors. When it is obvious that the acreage was inadvertently switched between lines at the time the insured's acreage report was completed resulting in incorrect acres between crops or practices, FSA FNs, types, etc., AIPs may approve a revised acreage report to correct the error. The reason for the revision must be documented. The insured must sign the revised acreage report.

**E. When Acreage Report Revisions Can Be Done Without a Crop Inspection (Cont.)**

(a) AIPs are to use this type of correction prudently and are to be approved only when it is obvious that:

(i) acreage reported on one line was inadvertently switched with acreage on another line, and

(ii) the AIP believes the insured did not intentionally report this information to obtain additional benefits; e.g., misreporting land location to obtain a lower premium. The AIP should try to establish whether there is a pattern of misreporting every year. If so, the AIP should not consider the misreported acres as inadvertent switching of acreage.

(b) This procedure cannot be used to correct overall variances between acres reported and acres determined;

**Example:** If the IRR practice was reported as 100.0 acres and the NI practice is reported as 150.0 acres, and it is determined that there are 95.0 IRR acres and 155.0 NI acres, this is a variance in reporting - under-reporting and over-reporting, and is not considered an inadvertent switch.

(c) When the acreage report is revised to correct an inadvertent switching of acreage, the revised acreage report must be processed prior to the claim. The acreage, the revised acreage report will be used as the reported acres and cannot be used as the determined acres also. The determined acres must remain a separate determination.

**Example:** 100.0 acres was initially reported as IRR and 50.0 as NI; however, the acres for the two practices were inadvertently switched. The determined acres for the IRR acreage is 51.5 acres; the revised reported acres are 50.0, so there is 1.5 acres under reported for this practice. The determined acres for the NI acres are 98.0 and the revised reported acres are 100.0, so there is 2.0 acres over-reported for this practice.

(d) The following can be considered correctable if the AIP believes that the insured did not switch the acreages to benefit from lower premiums, and so on:

(i) Acreages for practices were inadvertently switched. For example: 100.0 acres were reported as IRR and 50.0 as NI; however, the acres for the two practices were inadvertently switched when reported. The inadvertent switch of acreage may occur within the same unit, or for additional coverage, it may occur between different units when there are optional units for IRR and NI acreage.

**E. When Acreage Report Revisions Can Be Done Without a Crop Inspection (Cont.)**

(ii) Acreages for different types were inadvertently switched. For example: 150.0 acres were reported as oil type (048) sunflowers and 100.0 acres were reported as non-oil type (049) sunflowers; however, the acres for the types were inadvertently when reported. The inadvertent switch may occur within the same unit, or when optional units are allowed by type for the coverage selected, the inadvertent switch may involve different units.

(iii) Acreage between legal descriptions was inadvertently switched. For example: Unit 0001-0002OU has 100.0 acres reported with legal description Section 2, Township 5, Range 3. Unit 0001-0001OU has 150.0 acres reported with legal description Section 1, Township 5, Range 3. The legal descriptions are correct for the unit structures shown on the APH form. However, the acreage for the legal descriptions was inadvertently switched. The inadvertent switch may occur within the same unit; or may involve different units (for additional coverage) when optional units are allowed by sections (or other legal descriptions described in the policy). If this inadvertent switch was between the same crop that an insured has insured in two different counties, and the AIP requires separate acreage report forms be completed to report the acreage report information for the two different counties rather than reporting the information on one form, the AIP may consider this a correctable error if the criteria in (9)(a) are met.

(iv) When unit structure for the crop is by FSA FN and the acreage between two FSA FNs were inadvertently switched. For example, 200.0 acres for FSA FN 1234 was reported and 300.0 acres for FSA FN 2345 was reported; however, the acreage for the FSA FNs was inadvertently switched.

(v) Acreages between two crops were inadvertently switched. For example: one line showed 120.5 acres of corn and one line showed 155.6 acres of soybeans; however, there was actually 155.6 acres of corn and 120.5 acres of soybeans.

**F. Revisions to Reduce Premium for Acreage Destroyed Prior to Harvest (Short Rate)**

Acreage reports CANNOT be revised after the ARD to remove or reduce premium because the insurable acreage was destroyed prior to harvest, except when the actuarial documents provide a reduced premium rate (short-rate) for acreage destroyed prior to harvest. Short rate provides a reduced premium rate for acreage that will be destroyed prior to harvest and reported to the AIP by the date designated in the crop's SP. If the insured requests such acreage be designated separately on their acreage report, the AIP must revise the acreage report if the conditions stated in the CP and SP are met.

**F. Revisions to Reduce Premium … Destroyed Prior to Harvest (Short Rate) (continued)**

(1) Separate line entries are required on the acreage report for the acreage on which insurance will continue and the acreage eligible for the reduced premium rate (short rated acreage).

(a) The premium amount will be reduced (short rated), including CAT coverage, by the amount shown on the Actuarial Documents only if the insured notifies the agent by the date shown on the SP that the acreage will be destroyed by grazing or mechanical means prior to harvest, and the insured does not claim an indemnity on such acreage.

(b) If a notice of damage or loss is filed and the insured wants to file a claim for indemnity on the acreage at this time rather than short rate, the acreage must be appraised, accordance with the LAM. If the insured wishes to destroy the acreage to comply with other USDA programs, the acreage must be released when an adequate appraisal is made; or if applicable, the insured has agreed to leave representative samples so that adequate appraisals can be made at a later date.

(c) When timely and proper notification that the acreage will be destroyed is received, the AIP will revise the acreage report and reduce (short-rate) the premium accordingly. Insurance coverage will cease on any acreage the insured does not intend to harvest on the date the insured notifies the agent of such intent.

If the acreage that is short rated is not destroyed as intended, the insured will be subject to the under-reporting provisions contained in section 6 (f), (g)(1), and (g)(2) of the CCIP-BP. The acreage short-rated and taken to harvest is considered under-reported. If part of unit acreage is short rated and taken to harvest, the production harvested from the short rated acreage will be counted against the remaining insured acres on the unit. If the entire unit acreage is short-rated and taken to harvest, the harvested production from the short rated unit will be allocated to the insured units in the county. Such acreage cannot be added back to the acreage report, even if the crop would pass a crop inspection.

**Example:** Part of the acreage in the unit is short-rated and taken to harvest:

Unit 0001-0001OU wheat = 100.0 insured acres initially reported. The insured timely notifies the AIP that he/she is destroying 20.0 of the 100.0 acres. The AIP short-rates the 20.0 acres, but the insured takes all 100.0 acres to harvest. The insured files a claim for unit 0001-0001OU.

**F. Revisions to Reduce Premium … Destroyed Prior to Harvest (Short Rate) (continued)**

If the short-rated acreage is harvested, and the production from the short-rated acreage is not commingled with the insured acreage production, then the APH would include 80.0 acres and the production from the 80.0 insured acres. However, if the short-rated acreage production is commingled with the insured acreage production, the APH would include 100.0 acres and production from the 100.0 acres.

**Example:** All of the insured acreage in the unit is short-rated and taken to harvest:

Unit 0001-0001OU wheat = 100.0 insured acres initially reported. The insured timely notifies the AIP that the acreage will be destroyed. The AIP short rates the 100.0 acres, but the insured takes all 100.0 acres to harvest.

Wheat units in the county with remaining insured acres reported:

0001-0002OU = 50.0 acres
0001-0003OU = 100.0 acres
0001-0004OU = 25.0 acres

(2) Short rated acreage is not eligible for a claim for indemnity. However, a year the crop is short rated is considered a year of producing the crop; and is reported as zero production, identified by a "Q" yield descriptor, with the actual acres short rated on the production report and APH database.

(3) Short rated acreage cannot be reinstated for insurance coverage after the insured notifies the AIP that the acreage will be destroyed prior to harvest. Any production from short rated acreage will be considered production from uninsurable acreage for APH purposes.

(4) For situations other than short rated acreage, if the insured destroys or puts acreage to another use without consent, an appraisal of not less than the guarantee will be assessed on such acreage. However, such appraisals are not used for APH purposes.

Premium adjustments will not be made for insured acreage destroyed or put to another use after the ARD.

**G. Cannot Add Acreage of Small Grain Crop Initially Reported as Uninsurable**

Acreage Reports cannot be revised to add acreage of a small grain crop initially reported as uninsurable because the crop was planted for a use other than for which coverage is provided (e.g., wheat planted for the purpose of being grazed or destroyed before harvesting for grain). When acreage of a small grain crop reported as uninsurable is harvested, the under-reporting provisions (under-reported for a reported unit or an unreported unit) in the section entitled "Report of Acreage" in the BP apply.

## 1233 Acceptable Acreage Report Revisions for ARPI

ARPI acreage reports may only be revised when the following is applicable.

(1) Insureds may revise acreage reports for planted acres without AIP consent on or before the ARD.

(2) Acreage reports can only be revised after the ARD with the consent of the AIP when the AIP determines:

(a) information on the acreage report is clearly transposed;

(b) adequate evidence is provided that the AIP or someone from USDA has committed an error regarding information on the acreage report; or

(c) if allowed in the Crop Provisions.

(3) Acreage reports may be revised for land acquired after the ARD and AIPs may choose to insure or not insure the acreage, provided the acreage is insurable and an acreage report is filed. Acreage must meet all insurability requirements and policy elections cannot be modified, e.g. coverage level, protection factor, for the added acreage.

This does not apply to any acreage for which insurance attached under a different person's policy and a transfer of coverage and right to indemnity is executed.

## 1234 Measurement Services Requested for Acreage Reports

On or before the ARD, an insured may request an acreage measurement service. If an acreage measurement service is requested the following are applicable.

(1) An acreage report must:

(a) be filed on or before the final ARD;

(b) include estimated acreage for the acreage for which a measurement service has been requested; and

(c) clearly identify the acreage (e.g., field number) for which the measurement has been requested. If an acreage measurement is requested for only a portion of the acreage, or a portion of the acreage within a unit when units apply, such acreage must be separately designated on the acreage report.

(2) Documentation that verifies acreage measurement was requested must be furnished to the AIP on or before the final ARD.

(3) The measurement service may be completed by FSA or businesses that provide land measurement (including those with which sales agents are associated).

**Exception:** For claim purposes, measurement services performed by the agent are not allowed, see LAM.

(4) The measurement, when completed, must be provided to the AIP.

(5) If the acreage measurement is not provided at least 15 days prior to the premium billing date, the premium will be based on the estimated acreage and will be revised, if necessary, when the acreage measurement is provided.

(6) For CCIP policies, if the insured fails to provide the acreage measurement to the AIP by the time a notice of loss is filed, the AIP may:

(a) make all necessary loss determinations, except the acreage measurement, and defer finalization of the claim until the measurement is completed and provided. If the acreage measurement is not provided, the claim will not be paid; or

(b) elect to measure the acreage and finalize the claim. In addition, estimated acreage will not be accepted from the insured for any subsequent acreage report.

(7) For ARPI policies, if the acreage measurement is not provided by the time the final county revenue or final county yield, as applicable, is calculated, the AIP may:

(a) elect to measure the acreage and finalize the claim in accordance with applicable policy provisions;

(b) defer finalization of the claim until the measurement is completed with the understanding that if the insured fails to provide the measurement prior to the termination date, any claim will not be paid; or

(c) finalize the claim in accordance with applicable policy provisions after the insured provides the acreage measurement.

(8) If the acreage measurement is not provided to the AIP by the termination date, the insured will be precluded from providing any estimated acreage for all subsequent crop years.

(9) The acreage report will be revised if there is a discrepancy between the estimated acreage report and the measurement unless:

(a) the acreage measurement is not turned in timely; or

(b) the AIP has measured in accordance with E above and there is an irreconcilable difference in the measurements see (10) below.

(10) If there is an irreconcilable difference between:

(a) the acreage measured by FSA or a measuring service, and the AIP on-farm measurement, the AIP on-farm measurement will be used; or

(b) the acreage measured by a measuring service, other than the AIP on-farm measurement, and FSA, the FSA measurement will be used.

## 1235 Examples for Acreage Report Revisions

Following are some examples of incorrect acreage report and applicable revisions. Always document the reason for the revision on the form used to revise acreage reports.

(1) Insured reported unit 0001-0001OU and 0001-0002OU of grain sorghum as insurable. Upon inspection 0001-0002OU was found to be planted to an uninsurable practice.

**ACTION:** Revise 0001-0002OU to designate the acreage as uninsurable acreage instead of insurable. Indicate the reason why the acreage is uninsurable.

(2) During an inspection prior to harvest being general in the area, the AIP discovered that unit 0001-0001BU of soybeans had not been reported on the original acreage report. The crop inspection indicated that this unit and all other units met the appraisal criteria for accepting additional liability for the additional unit, as defined in the LAM.

**ACTION:** Unit 0001-0001BU may be added.

(3) An incorrect risk classification for unit 0001-0001BU was entered on the original acreage report.

**ACTION:** Revise the acreage report to show the correct risk classification, and notate the reason for the revision.

(4) The original acreage report shows 25.0 acres for unit 0001-0001BU, and the inspection reveals 50.0 acres were planted. The crop inspection indicated that all the criteria for accepting additional acreage for this unit (reported and unreported acreage) were met, as defined in the LAM.

**ACTION:** The acreage report may be revised to add the additional acreage.

(5) The original acreage report shows all of unit 0001-0001BU (108.0 acres) was planted by the FPD and there is no LP provision for the crop, but it was determined 20.0 acres of unit 0001-0001BU were planted after the FPD.

**ACTION:** Revise the acreage report to reduce the 108.0 acres of insured acreage to 88.0 insured acres. Document that unit 0001-0001BU was revised to designate the 20 acres planted after the FPD as uninsured acreage. Harvested production from insured acreage (88.0 acres) must be kept separate from harvested production from the uninsured acreage (20.0 acres).

(6) The original acreage report shows all of unit 0001-0002BU (200.0 acres) was planted by the FPD, but it was determined that 50.0 acres were planted 5 days after the final planting period. This is a crop that the policy provisions provide for automatic late-planted acreage coverage.

**ACTION:** Revise the acreage report to show 150.0 acres as timely planted with a separate line entry showing the 50.0 acres with the correct planting date.

(7) The original acreage report shows 50 percent share for unit 0001-0001BU. It is determined that the share at the time of planting was 100 percent and is still 100 percent. (No additional acreage is being added.)

**ACTION:** Provided a crop inspection indicates that unit 0001-0001BU acreage meets the criteria for accepting additional liability, as defined in the LAM, the acreage report can be revised to reflect 100 percent share.

(8) The original acreage report shows 100 percent share for unit 0001-0001BU soybeans. The inspection revealed the share at the time of planting was 50 percent.

**ACTION:** Revise the acreage report to reflect the appropriate share at the time of planting.

(9) The original acreage report shows unit 0001-0002BU of wheat with 100 percent share. The inspection revealed there were two BUs, one with 100 percent share and one with 50 percent share.

**ACTION:** Revise the acreage report to show the correct unit structure (two BUs). The APH database for 0001-0002 must also be divided to reflect the correct unit structure.

(10) The original acreage report shows two OUs of soybeans. The inspection determined that no separate records of production or acreage were maintained to support the production report filed.

**ACTION:** Revise the acreage report to combine the two OUs. Delete the unit number not kept.

(11) The original acreage report show unit 0001-0002BU soybeans with .333 share. The verification of the share revealed that the insured had no interest in this unit.

**ACTION:** Revise the acreage report to remove unit 0001-0002BU soybeans.

(12) The insured reported two units (0001-0001OU and 0001-0002OU) of soybeans on the acreage report. After the ARD, the insured reviewed the Summary of Coverage that was generated from the soybean acreage report and discovered that he/she had failed to report unit 0001-0003OU soybeans. The insured requests that unit 0001-0003OU be added. The crop inspection to accept additional acreage reveals that the appraisal for unit 0001-0001OU and the appraisal for 0001-0003OU exceed 90 percent of the yield upon which the per-acre guarantee for each unit is based. However, unit 0001-0002OU acreage appraises below 90 percent of the yield upon which the per-acre guarantee is based.

**ACTION:** The AIP must deny the request to add unit 0001-0003OU (additional acreage) since unit 0001-0002OU is considered to be in a potential loss situation as outlined in the LAM.

(13) The insured reports 100.0 planted acres on the acreage report, but only 75.0 acres are planted and the insured claims that 25.0 of the acres were actually prevented from planting. The insured claims he/she reported the 100.0 acres because he/she was planning to plant 100.0 acres, but then it started raining and the insured was unable to plant the other 25.0 acres as reported.

**ACTION:** If it is prior to the ARD, both the planted and PP acres can be revised. If it is after the ARD, the acreage report cannot be revised to add the PP acres. However, the planted acres can be revised downward, if at the time the revision is requested, no insured cause of loss affecting the planted acres has occurred, as stated in Para. 1232E(8) above. If it is before the ARD, the acreage report can be revised to add the PP acres and reduce the planted acres; and if it is after the ARD, no PP acres can be added.

## 1236 Identifying Acreage Damaged by UUF or a Third Party (CCIP policies only)

Acreage reports must be modified after the ARD to identify acreage damaged by UUF or a third party when the requirements in Para. 1310H are met. The change of the insured acreage type is not considered an acreage report revision because only the type of acreage is being changed, with no change to the number of acres insured or to premium.

Beginning with the 2018 crop year, in the event an insured suffers production losses due to UUF or a third party, the insured may request that no actual yield be reported for the damaged acreage and as a result reduced yields due to UUF/Third Party Damage will not impact the insured's approved APH yield when the requirements of Para. 1310H are met. If the insured requests such losses not be included in the APH database, the acreage damaged by UUF or a third party must be identified on the acreage report, even when such occurs after the ARD.

(1) Separate line entries are required on the acreage report for the acreage not damaged by UUF or a third party and the acreage damaged by UUF or a third party. Acreage damaged by UUF or a third party must be identified as Insured-UUF/Third Party, see Para. 1213.

(2) Damage caused by UUF or a third party is an uninsurable causes of loss and therefore not eligible for indemnity.

(3) Premium adjustments will not be made for insured acreage damaged by UUF or a third party.

(4) The acreage damaged by UUF or a third party reported on the acreage report as Insured – UUF/Third Party damaged acreage in any of the four most recent CYs is used in the determination of the maximum number of eligible PP acres.

(5) If all of the acreage of the crop is damaged by UUF or a third party, it is considered a year of producing the crop.

(6) See Para. 1305G for production reporting requirements.

## 1237-1300 (Reserved)

# PART 13 PRODUCTION REPORT

## 1301 General Information

An annual production report is required for all crops with a yield-based plan of insurance that is required to establish the approved APH yield. Additionally, an annual production report is required for all ARPI policies, unless otherwise specified in the SP (e.g., forage). For CCIP policies, the production report collects the prior crop year(s)' production from the insured and the information contained within the production report is used to establish the approved APH yield. For ARPI policies, the production report collects the current crop year's production by the PRD at the end of the crop year.

### A. Producing the Crop

An insured that received a share of the insured crop's production or was a member or SBI of a person that received a share of the insured crop's production is considered to have produced the crop that crop year in the county in which it was produced.

Likewise, if a member or SBI of the insured received a share of the insured crop's production, the insured is considered to have produced the insured crop that crop year in the county in which it was produced.

See Part 14 for requirements for acreage and production records, and Part 15 for use of another producer's acreage and production history, landlord/tenant Approved APH Yields, and use of APH Database Yields when insured person change or land is transferred to another person.

### B. Production Report versus APH Database

Production reports are separate from APH databases. The production report contains the insured's report of production whereas, the actual yield information reported on the production report is used by the AIP to establish an APH database and calculate an approved APH yield for CCIP policies.

While an insured's APH database(s) may be used to capture the same information provided on the insured's production report, the purpose and function of a production report is different than that of an insured's APH database. See Part 15 for procedure and instructions regarding APH databases. The AIPs may use the APH database or other forms, such as the Schedule of Insurance, to collect the production report from the insured.

The production report is designed to accommodate both a carryover insured with an established APH database, and a new insured by allowing the reporting of multiple APH crop years' yield history for new insureds and carryover insureds that recertify previous year(s)' history. For those insured under the ARPI plan of insurance, the production report will accommodate the reporting of the current year's production on the same basis of the current crop year's planting.

## A. Acceptability

Production reports must meet all of the following to be acceptable.

(1) Include all acreage and production (insured and uninsurable/uninsured) by P/T/TMA as identified on the actuarial documents from the insured's operation for each APH crop year being reported.

For CCIP policies, this includes prior year units not contained in the insured's operation for the current crop year. See Part 17 Section 3 and Part 18 for additional reporting requirements for P/T/TMA.

**Example:** Insured A had 10 OUs in 2018. In 2019, the insured only has 8 OUs. Insured A must report all acreage and production from all 10 OUs the insured had in 2018 when the insured submits a production report for the 2019 crop year; however, the APH databases are not updated for the 2 units no longer in the farming operation.

For ARPI policies, if the acreage is unharvested, the insured must certify either unharvested and destroyed, unharvested and put to another use, unharvested appraised, or unharvested with harvest incomplete. See Para. 1305F.

(2) Conform at least to the unit structure (EU, BU, and/or OU) that applies for the current crop year in which the insured had an interest in the crop for each APH crop year production reports are certified for those currently insured under a CCIP policy.

**Exception:** This does not prohibit the insured from reporting production at a level lower than the elected unit structure if such production can be summed to the elected unit structure by the AIP see Para. 1303. If the insured certifies production on the production report at a level below the unit structure that applies for the current crop year, they must have acceptable records at the level reported or assigned yield provisions will apply.

For ARPI policies insureds may report production on a CCIP policy unit or lower level though units are not applicable for ARPI policies. See Para. 1791 for use of production reports when switching to a CCIP policy. Although reporting on an OU basis is not required for ARPI, failure to report on an OU basis may limit choices regarding unit structure if the insured switches to a CCIP policy in subsequent year.

(3) Report all APH crop years continuously when multiple years of production history are certified; there cannot be a break in continuity of production history. See Para. 1306 and Para. 1307 for additional procedure related to continuity of production reports.

**A. Acceptability (continued)**

(4) Be supported by acceptable production evidence. See Part 14 for production evidence requirements. The insured must maintain and provide upon request acceptable production evidence for each crop year by unit, when units are applicable, for each P/T/TMA. In accordance with section (3)(g) of the BP, the insured must accurately report all information that is used to determine approved yield and the insured must certify to the accuracy of the information on their production report. The approved yield is determined by the APH database which is established according to the unit arrangement selected by the crop/P/T/TMA and other authorized APH database situations contained in Para. 1505.

If the insured does not have acceptable supporting production records to support the information on the production report, the insured will be subject to the procedures in Para. 1302 D. For example, if insured with BU or EU reports on an OU basis, they must have acceptable records for all OUs or assigned yield provisions will apply.

(a) See additional production history provisions by crop in Part 19 Section 1 for Category B crops, Part 19 Section 2 for Category C crops and Part 20 for other coverage plans.

(b) See Exh. 13 for completed samples for individual crops and for directions outlining adjustments to total production entries. Directions for sample production worksheets for Sugar Beets, Dry Beans, and Northern Potato Quality Endorsement and for Multi-Purpose Production and Yield Worksheets are also provided in Part 17 and Exh. 17.

If the insured does not have acceptable supporting production records to support the information on the production report, the insured will be subject to the provisions in D below.

(5) Be signed by the insured.

(6) Be submitted by the insured to the AIP by the PRD.

**B. Zero Planted Acreage Report**

(1) For annual crops insured under CCIP policies, a zero planted acreage report, submitted the previous year, will be considered an acceptable production report for the current crop year, provided the acreage report was acceptable.

(2) For crops insured under ARPI policies, a zero planted acreage report submitted for the current crop year will be considered an acceptable production report for the current crop year, provided the acreage report was acceptable.

**C. Claims for Indemnity**

Claims for indemnities are considered production reports for CCIP policies and must be used; however, some claims may have to be reviewed to ensure that the correct production is used for APH database purposes. See Para. 1310B.

**D. Acceptable Production Reports Not Provided**

(1) For CCIP policies, assigned yield provisions apply to carryover policies on an APH crop year basis to APH databases (units, P/T/TMA) that had planted acres (except for units with claims for indemnities) if an acceptable production report for the prior crop year is not provided by the PRD. See Para. 1306C.

**Exception:** If the difference between the yield certified and the verifier determined yield is within tolerance as provided in Para. 1597, assigned yield will not apply. If assigned yield apply and the verifier determined yield is less than the assigned yield, then the verifier determined yield would apply.

(2) For ARPI policies, if an insured does not submit an acceptable production report to the AIP by the PRD, the PF for the insured's policy in the following crop year will be limited to the lowest PF available. AIPs must transmit a production report to RMA indicating the insured did not provide a production report using a record type of "L". For transferred policies, the assuming AIP may obtain production report information for the prior crop year from RMA systems.

If the insured subsequently switches to a CCIP policy in the following crop year, the insured will be subject to assigned yields and related procedures. Since there is not a prior crop year's approved APH yield available, the assigned yield will be 65 percent of the applicable T-Yield. The assigned yield will apply beginning with the 2016 crop year, e.g., 2014 production reports are required, assigned yield in 2015 is waived, 2015 production reports are required, assigned yield applies in 2016.

**E. Accuracy**

Insureds must certify to the accuracy of the information on the production report. If the insured fails to accurately report the production, the insured will be subject to the provisions in D above unless the information is corrected:

(1) on or before the PRD; or

(2) the incorrect information was the result of AIP error or the error of someone from USDA.

Anytime it is discovered the insured has misreported any material information on the production report, the insured will be subject to the provisions in D above.

## A. Certification

(1) Insureds must certify the crop acreage and production by unit and P/T/TMA (within the unit that requires separate APH databases) for the most recent APH crop year. Insureds may report production using either of the following:

(a) the insured's current unit structure; or

(b) any level, such as field, provided the AIP can aggregate the production reported to the lowest level unit structure by APH database. Such as:

(i) EU structure;
(ii) BU structure;
(iii) OU structure; or
(iv) any level, such as field, tract, etc.

**Example 1:** Insured A elected an EU structure for 2019. The policy allows for the election of OU. Insured A may report his 2018 production at any of the following levels, provided the AIP can aggregate the production in the APH database to the OU level.

(a) EU structure;
(b) BU structure;
(c) OU structure; or
(d) Any level, such as field, tract, etc.

**Example 2:** Insured B elected a BU structure for 2019. The policy allows for the election of OU. Insured may report his 2018 production at any of the following levels, provided the AIP can aggregate the production in the APH database to at least the OU level.

(a) BU level;
(b) OU level; or
(c) Any level, such as, field, tract, etc.

**Example 3:** Insured C elected BU structure for 2019. The policy does not allow for the election of OU. Insured may report his 2018 production at any of the following levels, provided AIP can aggregate the production in the APH database to the BU level,

(a) BU level; or
(b) Any level, such as, field, tract, etc.

**A. Certification (continued)**

Insureds cannot report production at a level greater than the insured's current unit structure, e.g., the insured cannot report at the BU level when insured as an OU. If the insured reports production at a level below the unit structure that applies for the current crop year, they must have acceptable records at the level reported or assigned yield provisions will apply. Production and acreage should be prorated according to Para. 1005 or 1034B, if the insured has BU or EU unit structure in place, provides an acceptable production report, but it is not on the basis of APH databases established below the BU or EU or production is commingled.

**Example 1:** An insured with EU certifies production on an OU basis and has acceptable records for all OUs. If the insured does not have acceptable records on an OU basis, they should not report production on that basis. Failure to have acceptable records at the level reported will result in assigned yield and related provisions applying.

**Example 2:** An insured has OU APH databases established and has EU for the current year. The insured does not keep records on an OU basis or production is commingled for the current crop year. The insured reports total acres and production for the EU and the AIP will prorate production according to Para. 1034B.

(2) For ARPI policies, insureds must certify the harvested and unharvested crop acreage and production by P/T for the current crop year. Insureds may report production by any of the following:

(a) the county;

(b) the basic unit or lowest level unit structure available for the crop under an APH-based plan of insurance (e.g., maintain OU for subsequent policy transfer to APH-based plan of insurance); or

(c) any level, such as field.

**Example:** Insured A insures corn under ARPI in 2019. The APH-based plan of insurance allows for the election of OU. Insured A may report his 2019 production at any of the following levels:

(a) County
(b) BU or OU structure; or
(c) Any level, such as field.

**B. Multiple Insureds on the Same Unit**

If more than one person is insured on the same unit, each person is responsible for submitting an acceptable production report(s). When acceptable production records are submitted by the PRD for all units/P/T/TMA, see Part 15. Different yield calculation methods may apply based on the production reports provided by each person.

**C. MY**

Refer to Part 17 Section 7 for MY production reporting requirements, when MY applies.

**D. Amended Production Reports**

The insured may amend the production report on or before the PRD.

For CCIP policies, any amended production report submitted after the PRD will be used when computing the following year's approved APH yield. If policy is insured on a continuous basis, all actual and assigned yields from the prior crop year's APH database within the base period must be used; however, assigned yields may be replaced with actual yields.

Amended production reports are subject to APH field reviews and acceptable production evidence must be available.

**E. Submission or Certification of Production Reports for Crop Years Other Than the Most Recent APH Crop Year**

(1) Insureds may certify production reports for crop years other than the most recent for various reasons, including:

(a) certification of crop years not previously certified;
(b) correction;
(c) replacement of temporary yield;
(d) replacement of assigned yield;
(e) certification of multiple years by new insured;

**E. Submission or Certification of Production Reports for Crop Years Other Than the Most Recent APH Crop Year (Continued)**

(f) certification using another producer's history for new acreage;
(g) recertification for new actuarial offer;
(h) recertification for new unit structure; or
(i) other.

(2) Continuity of production reports must be maintained.

(3) Acceptable production reports must be submitted by the applicable PRD for the current crop year to be used for the current crop year.

(4) Production reports for all certified crop years are subject to APH field reviews and acceptable production evidence must be available.

## 1304 Production Included on Production Report and in the APH Database, When APH Databases are Applicable

Include all production from the following types of acreage on the production report and in the APH databases, when APH databases are applicable.

**A. Insurable Acreage**

(1) For CCIP, this includes insurable acreage of the insured crop that should have been reported for insurance but was not reported as required by the CP. If a claim and the production from the unreported acreage are combined with production from the reported acreage, the total acreage (reported and unreported) and total production must be used to calculate the actual yield for the APH crop year. However, if separate APH databases are required (e.g., separate units, TMAs and etc.) for APH database purposes, then the acreage and production that is applicable to each APH database must be entered in the appropriate APH database.

**Note:** If insurable acres are damaged by uninsurable unavoidable fire (UUF) or a third party, see Para. 1305G.

(2) For ARPI policies, report as insurable production, all production from:

(a) insurable acreage planted to the insured crop for harvest as provided in the CP;
(b) uninsurable acreage, when commingled with insurable production.

**B. Uninsured Acreage when Commingled with Production from Insured Acreage**

Uninsured acreage is insurable acreage on land classified as high-risk land excluded with a High-Risk Land Exclusion Option or acreage of Category C crops that does not meet age and/or production minimums excluded in accordance with Para. 1803. If production records do not clearly indicate separate production from uninsured acreage:

**B. Uninsured Acreage when Commingled with Production from Insured Acreage (cont.)**

(1) uninsured acreage is considered commingled with production from the insured acreage; and

(2) total acreage and total production (insured and uninsured) is entered in the APH database used to calculate the actual yield for the APH crop year.

**Exception:** If commingled production is allocated for claims purposes, only the insured acreage and production allocated to the insured acreage is used to calculate the actual yield for the production report and APH database.

**C. Uninsurable Acreage when Commingled with Production from Insurable Acreage**

Uninsurable acreage is acreage of an insured crop that does not meet the policy requirements for insurance or is insurable acreage the insured elected not to insure to collect a full indemnity on the first insured crop planted on the same acreage (see Para. 1223). If production records do not clearly indicate separate production from uninsurable acreage:

(1) uninsurable acreage is considered commingled with production from the insured acreage; and

(2) total acreage and total production (insured and uninsurable) is reported on the production report and entered in the APH database used to calculate the actual yield for the APH crop year, when APH databases are applicable.

**Exception:** If commingled production is allocated for claims purposes, only the insured acreage and production allocated to the insured acreage is used to calculate the actual yield for the production report and APH database.

**D. PP Acreage on which the PP Payment was Limited**

Production assigned on PP acreage on which the PP payment was limited to 35 percent of the PP coverage, see Para. 1702J, must be included on the production report and in the APH database. Such acreage and yields must be identified with "PP" or "PW" yield descriptors.

**E. Unharvested Acreage**

Appraised potential production, determined by a RO, FSA, or AIP representatives, is included on the production report.

(1) The production report and APH database must include planted insurable acreage for Category B crops. For Category C Crops, see Part 18 for instructions concerning how to report insurable and uninsurable acreage.

**E. Unharvested Acreage (Continued)**

(2) If acreage of the crop was destroyed/put to another use and an appraisal of the potential production was not made (not requested for APH database purposes or no claim), the production report will indicate the planted acres and a yield of zero.

**F. Zero Planted and Short Rated Acreage**

The acreage report serves as the production report for zero planted and short rated acreage. Although there is not any production from short rated acreage it is considered a year of producing the crop.

(1) For zero planted acreage, zero production, identified by a "Z" yield descriptor, is reported on the production report and included in the APH database.

(2) For short rated acreage, zero production, identified by a "Q" yield descriptor, with the actual acres short rated is reported on the production report and included in the APH database.

**Exception:** If short rated acreage is harvested, see Para. 1305C.

**G. Native Sod Acreage**

Production reports are required for native sod acreage. Production from native sod acreage must be reported:

(1) separately; and
(2) by FN/Tract/Field(s).

**H. Acreage affected by Prohibited Substances**

If certified organic or transitional acreage is affected by a prohibited substance (See GSH for information on prohibited substances):

(1) for Category B Crops:

(a) before the ARD, the production from the affected acreage will be added to the conventional APH database; or

(b) after the ARD, the crop is insurable as it was reported and the production from the affected acreage will be added to the certified organic or transitional APH database; and

(2) for Category C Crops:

**H. Acreage affected by Prohibited Substances (Continued)**

(a) before the ARD, a RO Determined Yield must be requested for the change in practice; or

(b) after the ARD, the crop is insurable as it was reported; however, if the prohibited substance results in a change in practice for the subsequent crop year, a RO determined Yield must be requested in the subsequent crop year.

## 1305 Production Included on Production Report but not in the APH Database

Include all production from the following acreage types on the production report but do not include in the APH database.

**A. Uninsured Acreage**

For Category B crops the production from uninsured and insured acreage is not commingled, the uninsured production must be reported on a production report but not included in the APH database. The production report for uninsured acreage must be identified as "uninsured acreage" and is not used to calculate the actual yield for the APH crop year. Separate APH databases for such acreage and production are not established.

For Category C crops uninsured acreage and production see Part 18.

**B. Uninsurable Acreage for CCIP and ARPI Policies**

If the production from uninsurable and insurable acreage is not commingled, it must be reported on a production report but not included in the APH database, when APH databases are applicable. A production report containing the acreage and production of uninsurable acreage of a second crop that the insured elected not to insure to collect a full indemnity on the first insured crop planted on the same acreage is required, see Para. 1223. Although considered uninsurable production, a year when only uninsurable acreage of a second crop is grown will be considered a year of producing the crop for new producer determinations and a year of actual yields for determining the applicable percentage of the variable T-Yield. See Para. 1215 for information on uninsurable acreage.

The production report for uninsurable acreage must be identified as "uninsurable acreage" and is not used to calculate the actual yield for the APH crop year, when APH databases are applicable. Separate APH databases for such acreage and production are not established. See part 18 for information specific to Category C crops.

**Exception:** Previously uninsurable acreage, crops, practices, or types made insurable by RMA may be reported by insureds and have APH databases established that contain such production history if all record requirements are met.

**C. Short-Rated Acreage**

Production from acreage that was short-rated will be reported as uninsurable production. The production will not be used to calculate the approved APH yield, if the AIP was notified, prior to the published date in the SP, that the insured intended to destroy acreage of the crop prior to harvest either by grazing or mechanical means.

(1) If short-rated acreage is harvested, the acreage and production from the short-rated acreage is used in the APH database only if the production is commingled with production from acreage of the insured crop that was not short rated.

(2) If the AIP is not notified, and the crop's acreage is grazed, destroyed, or put to another use, the total planted acres and harvested production (if any) will be used to calculate the approved APH yield. The full premium rate will apply (not short-rated). For claim purposes, such acreage is destroyed without consent and uninsured cause of loss procedures apply.

**D. Acreage Appraised for Production Lost due to Uninsurable Causes of Loss**

The appraised production from uninsurable causes of loss (e.g., chemical drift, terrorism, etc.) must be reported on the production report as an uninsurable cause of loss appraisal. . In addition, appraised production from the acres damaged by UUF or a third party that meet the requirements in Para. 1310H must be reported separately from other uninsured causes of loss on the production report, see G below.

**E. Acreage with Appraisal from Only a Portion of the Field**

Appraisals obtained from only a portion of the acreage in a field that remains unharvested after the remainder of the crop within the field has been destroyed or put to another use must be reported on the production report as uninsured production, unless the appraisals were taken from representative samples are left in accordance with the CP.

**F. Unharvested Production for ARPI Policies**

For ARPI policies, when acreage is unharvested, the insured must report zero (0) production using the yield descriptor of UG, the number of unharvested acres and whether acreage was:

(1) unharvested and destroyed; or
(2) unharvested and put to another use.

**F. Unharvested Production for ARPI Policies (Continued)**

**Exception:** Even though appraisals for production are not required, if an appraisal is made on representative samples, the insurable production reported is the amount determined by the appraisal. If an appraisal is for only a portion of the acreage in a field that remains unharvested after the remainder of the crop within the field has been destroyed or put to another use, the production must be reported on the production report as uninsured production, unless the appraisals were taken from representative samples.

**G. Acreage Damaged by UUF or a Third Party**

For acreage contained in an APH database damaged by UUF or a third party that meets the requirements in Para. 1310H and the insured chooses to not include the damaged acreage in the APH database:

(1) when part of the acreage within an APH database was damaged:

(a) the planted/insurable acres damaged by UUF or a third party are reported separately from acreage not damaged by UUF or a third party on the production report (must not be commingled):

(i) if the production was completely destroyed on the damaged acreage, report the damaged acreage on the production report with the production reported as zero (0);

(ii) if there is some production from the damaged acreage, report the damaged acreage on the production report with the production identified as from acreage damaged by UUF or a third party;

**Note**: If production from the planted/insurable acres damaged by UUF or a third party is commingled with production from the acreage not damaged by UUF or a third party so they cannot be reported separately on the production report, the damaged acreage and production must be included in the APH database.

(b) the damaged acreage and the production from the damaged acres, if any, are not included in the APH database; and

(c) the acreage and production from the remaining acreage not damaged by UUF or a third party is included in the APH database, identified with yield descriptor FA. The FA is considered an actual yield.

**G. Acreage Damaged by UUF or a Third Party (Continued)**

**Note:** In situations where any yield descriptor other than an "A" would apply, the other yield descriptor would take precedence over the "FA" and must be used. For example, if the "PW" yield descriptor (which is used to identify a weighted average yield assigned when PP payments are limited to 35% of the PP coverage and the unit/P/T contains both PP acreage and planted acreage of the first insured crop) was applicable and "FA" was also applicable to the actual yield, the "PW" yield descriptor must be used to identify the yield instead of the "FA" yield descriptor.

(2) when all of the acreage within an APH database was damaged:

(a) if the production was completely destroyed on the damaged acreage, the total acres are reported on the production report with the production reported as null;

(b) if there is some production from the damaged acreage, the damaged acres and the production are reported with the production identified as from acreage damaged by UUF or a third party on the production report;

(c) the acres and production are reported on the APH database, as a zero (0), with a 0 actual yield identified by a FD yield descriptor; and

(d) the FD yield descriptor functions in the same manner as the Q yield descriptor from short rate acreage and the 0 actual yield will not be included when calculating the Average, Rate, Adjusted or Approved APH yield.

**1306 Continuity**

There may be no break in the continuity of years for which production reports for all units (for the entire farming operation) are provided. All years' actual yields reported for use on the production report must be continuous.

**A. Zero and Short Rate Acreage Reports**

A valid acreage report indicating the insured crop was not planted (zero acreage or not planted for an insurable purpose, e.g., soybeans for hay) or was planted and short rated, is considered a year of records for purposes of determining production report continuity. This applies to Category B crops only, unless the exception in Para. 1307B is met.

**B. New Insureds**

For new insureds, there may be no break in the continuity of years for which production is certified for all units for a production report to be acceptable. See exception in Para. 1307. If an insured omits a crop year that it received a share of the crop's production, continuity is broken that crop year and acreage and production provided on the production report prior to that crop year is not used. Variable T-Yields will be used to complete the APH database, if necessary.

**C. Carryover Insureds**

For carryover insureds, if acceptable production reports are not submitted or acceptable production evidence is not provided when requested, OUs are not allowed on the policy and assigned yields apply to all units (unless a unit has a claim for indemnity to determine the actual production and yield. In this instance, the production to count from the claim is used to determine production for the applicable unit).

However, assigned yields are used to maintain continuity of records and previously reported yields in the APH database will continue to be used. Loss of OUs does not require combination of OU APH databases. Refer to Part 18, 20, and 21 for Category C and D crops and Pecan Revenue.

**D. UUF or Third Party Damage**

When all of the acreage within an APH database is damaged by UUF or a third party, meets the requirements in Para. 1310H, and is reported on the production report, it is considered a year of records for purposes of determining production report continuity.

**1307 Break in Continuity**

If a break in continuity of production reports occurs for a crop year due to the insured having no interest in the crop (did not farm, cash-leased to another party, sold the land and then gets it back, etc.) and the insured requests to use acreage and production history prior to the break in continuity, prior production reports and records may be used as follows.

**A. Category B Crops**

For new insureds, if the verifier approves use of the production reports prior to the break in continuity, enter a "Z" in the crop year that broke continuity and calculate the approved APH yield according to the current procedure.

**B. Category C Crops**

When the insured (new or carryover) certifies the acreage and production and provides acceptable production evidence for the crop year (obtained from an insured who had an interest in the crop that crop year). If such records are not available or were not provided for such crop years:

**B. Category C Crops (Continued)**

(1) for Avocados, Lowbush Blueberries in Maine, Stonefruit in California, Table Grapes and Grapes with Flame Seedless, Princess, Ruby Seedless, and Thompson Seedless types, a yield descriptor of "U" is entered in the APH databases for the applicable year that the crop was insured either:

(a) under a different crop policy (e.g., grapes); or
(b) for a change in management practices, such as buckhorning or stumping for avocados and mowing for blueberries.

Although acres are reported, the crop years with a "U" yield descriptor are not considered APH crop years but are considered a year for determining the base period see also Para. 1860 Added Land/New Producer Procedures.

(2) for all other crops/types:

(a) a RO determined yield may be requested. New insureds must include records for the crop years prior to the break in continuity. Both new and carryover insureds must certify to the circumstances causing the break in continuity.

The RO will review the production history (including claims history), determine if the prior years' production history may be used and the applicable yield ("F" yield descriptor) that is substituted for the missing year(s).

(b) if a RO determined yield is not requested, "Z"s are not entered for such crop years to maintain continuity of production reports.

## 1308 Required Elements of Production Report

(1) For CCIP policies, production must be reported by crop year for each unit, share arrangements (landlord or tenant), different P/T/TMA and other characteristics. Production may be reported at a field/CLU basis.

(2) For ARPI policies, production must be reported by crop year for each share arrangement and P/T. Although ARPI does not have units, production may be reported at BU or OU, if OUs are available for the crop under an APH-based plan of insurance or a field basis to facilitate subsequent APH database establishment, if the insured switches to CCIP policy in the future.

(3) Required elements and information for a production report. See Exh. 13 for completed examples of the Production Report.

| ELEMENT | REQUIRED INFORMATION |
|---|---|
| **State<br>County<br>Policy Number** | State, county and policy number to which the report pertains. |
| **Insured's Name<br>Address Phone No.<br>Agent Code** | Name, address, phone number and code of the agent. |
| **Crop/Practice/Type/ TMA/Other Characteristics/ Unit Number** | Crop name, P/T/TMA/Other characteristics and unit number. Enter the abbreviation for the P/T. For ARPI policies, unit number is not required unless the insured chooses to report on a unit basis. |
| **Legal Description** | Enter the section, township and range, or other descriptions for land if rectangular survey is not applicable. This may include GPS coordinates or other land identification.<br><br>If additional space is needed, attach a supplemental sheet. |
| **FSA Farm/Tract/Field Number** | FSA Farm/Tract/Field number is optional unless:<br><br>Units are based on FSA FN, then the FSA FN is required, when units are applicable; or<br><br>Production is being reported from acreage emerging from an USDA program, new breaking acreage, or native sod acreage is applicable in the initial or any subsequent crop years. See Part 17 Sec. 8.<br><br>Production is being reported at the Farm/Tract/Field level. |
| **Other Persons** | Enter the names of other persons with an insurable share in the crop acreage (not a SBI or landlord/tenant policy). If none, enter "NONE". |
| **Record Type** | Indicate the type of acceptable records maintained for the last year in the base period: Production Sold/Commercial Storage; Farm Stored Measured by Insured, Pick/Daily Sales Records, Automated Yield Monitoring System, Farm-Stored Measured by Authorized Representative of the AIP, Livestock Feeding Records, Claim for Indemnity, Appraisal (non-loss), Field Harvest Records, Zero planted acreage report, UUF/Third Party Damage, and/or Other. See Part 14 for description of types of records.<br><br>For ARPI policies: when acreage is unharvested specify whether unharvested and destroyed, unharvested and put to another use, unharvested appraised or unharvested with harvest incomplete; if insured does not report production, indicate unreported. |
| **Processor Number/Name** | If applicable, enter the processor contract number(s) and processor name. N/A for ARPI policies. |

| ELEMENT | REQUIRED INFORMATION |
|---|---|
| **Number of Trees/Vines** | Total number of trees or vines for perennial crops, if applicable. N/A for ARPI policies. |
| **Total Production** | Enter total production from the acreage being reported. For ARPI unharvested acres, enter 0, unless there is an appraisal. |
| **Other** | For Category C crops, enter the year or weighted average year (W) the insurable trees or vines in the unit, were planted/set out, grafted, or dehorned in the orchard, vineyard, grove or bog;<br><br>For alfalfa seed, forage production, forage seeding, mint and sugarcane enter the applicable planting dates;<br><br>For green peas, enter the contract price;<br><br>For Sugarcane and Sugar Beets, enter the percent of sugar;<br><br>For potatoes insured under the Northern Potato Quality Endorsement, enter the Northern Potato option percentages (for the most recent year in the base period);<br><br>For new producers of the crop, enter the crop years they have produced the crop (e.g., 2017 and 2018). See individual crop examples in Exh. 13 for completed samples. If not applicable, leave blank; and<br><br>For skip-row corn insurable in certain counties in Colorado, Kansas and Nebraska through a SP, and for all skip-row cotton, enter the skip-row planting pattern and row width code. |
| **Insurability** | For CCIP policies, indicate whether acreage and production being reported is from acreage that was insurable, uninsurable, uninsured, damaged due to UUF/Third Party, had an uninsurable cause of loss appraisal or had a PP payment that was reduced due to a second crop being planted.<br><br>For ARPI policies, indicate whether acreage and production being reported is from insurable or uninsurable acres. |
| **Area Classification** | Enter the map area classification from the actuarial documents if applicable. If not applicable, leave blank. |
| **Crop Year** | Enter the appropriate year for the annual production and yield being reported. |

| ELEMENT | REQUIRED INFORMATION: |
|---|---|
| **Multi Crop Year Reporting Reason** | Enter applicable reason an insured is reporting a crop year other than the most recent APH crop year. Insureds may certify production reports for crop years other than the most recent for various reasons, including:<br><br>(a) certification of crop years not previously certified;<br>(b) correction;<br>(c) replacement of temporary yield;<br>(d) replacement of assigned yield;<br>(e) certification by new insured;<br>(f) certification using another producer's history for new acreage;<br>(g) recertification for new actuarial offer;<br>(h) recertification for new unit structure; or<br>(i) other.<br><br>If not applicable, leave blank. See Para. 1303E. |
| **Acres** | Enter planted acres for annual crops or number of acres for perennial crops for each crop year being reported. For annual crops, enter "0.0" if the crop was not planted for any year. |
| **Yield Descriptor** | Enter the appropriate yield type descriptor for each yield. See Exh. 15.<br><br>For ARPI policies: for unharvested acres, enter "UG"; if the insured does not provide a production report, enter "UR". |
| **Yield** | Enter the appropriate yield. See Part 17 and 18 for instructions. |
| **New Producer** | Indicate whether the insured is a New Producer. N/A for ARPI policies. |
| **Added Land/ New Crop/P/T/TMA** | Indicate whether production report is for Added Land/New Crop/P/T/TMA. N/A for ARPI policies. |
| **Insured Signature and Date** | Insured must sign and date production report. |

(4) AIPs must obtain the insured's signature and the date of the signature; explain certification statements to ensure the insured understands what is being certified and the consequences of an inaccurate production report and certification.

## 1309 Verification, Review and Correction

The production report is subject to verification and review. When the crop is selected for review, supporting evidence of acreage and production will be required by unit/P/T/TMA for all crop years' acreage and production.

(1) Policies without records (65 percent T-yields only) are subject to a file review only.

(2) The production report will not be subject to the AIP APH field review process for that crop year if:

(a) the insured submits production evidence for all units and years for which yields are being certified; and

(b) the AIP verifier reviews the information and determines it is acceptable. If AIP verifier determines the production records are not acceptable or yield does not appear reasonable, AIP must verify the production information.

(3) For CCIP policies, when it is discovered during an APH review that an APH database is in error, the APH database will be corrected in the current crop year. See Para. 1597.

Actual yield information obtained from, but not limited to, the following may be used to correct approved APH yields:

(a) production evidence for loss adjustment purposes which is recorded on proof of loss, production worksheet, etc., which is accepted by RMA or an AIP;

(b) FSA records; or

(c) production determined in the course of RMA/AIP review.

## 1310 Production

The total production is entered into the total production column when actual yields are reported. When available, the adjusted production is entered in the total production column when actual yields are reported. Adjustments to production for ARPI policies will be made on the same basis as a claim for indemnity for CCIP policies when such information is available on the acceptable supporting production records.

### A. Adjustments or Conversions

Some crops require an adjustment or conversion to total production. If a worksheet is used to adjust production, it must be sent to the verifier along with the production report. For adjustments or conversions required to determine production for individual crops. See Part 19 for Category B and Category C Crops.

**B. Claim for Indemnity**

Production determined on a Claim for Indemnity for the 1986 and subsequent crop years (Production Worksheet, Proof of Loss, etc.,) will be used, except for appraisals made for excluded causes of loss (hail and/or fire when the Hail and Fire Exclusion Option is elected). Beginning with the 1992 crop year, appraisals made for uninsured causes of loss (e.g., failure to follow recognized good farming practices and acreage destroyed without consent) are not used for APH database purposes.

(1) Appraisals for potential production remaining in the field (for unharvested acreage) are considered production for APH database purposes.

(2) Use production from the Claim for Indemnity if production reported by the insured on the production report is not the same as the production on the claim for indemnity.

**Exceptions:**

(a) apple/pear claims where the production was adjusted for quality and an Optional Coverage for Quality Adjustment (Apples) or the Fresh Pear Quality Adjustment Endorsement was in force;

(b) potato claims where the production was adjusted for quality and the Northern Potato Quality Endorsement was in force;

(c) allocated production from an unreported unit(s);

(d) crop appraisals that were reduced because the crop was in the first stage (e.g., sugar beets and onions). Use appraisals prior to reduction. Also see LAM regarding allocated production from unreported unit(s); and

(e) claims where total production shown is from multiple years due to production being commingled between crop years.

(3) Reduced Production on a Claim.

(a) If the production used for a claim determination was reduced according to the policy to account for transportation to market, reconditioning cost, etc., the reduced production amount will be added back to the production for APH database purposes.

(b) Insureds must document the amount of added back production and provide documentation supporting the amount that is acceptable to the verifier. AIP must maintain a copy of the documentation in insured's file.

(4) Production from claim determinations will be used for APH database purposes regardless of whether the insured files a production report for the year.

### C. Production Adjustments

Production reported on the production report will be adjusted for moisture, foreign material, dockage, test weight, quality, grade, etc., on the same basis as claims for indemnities see exceptions in B above, when acceptable records provide such information. However, if such information is not included on the acceptable production evidence, production will not be adjusted.

### D. Moisture

Production having less moisture than the percentage stated in the policy will not be increased to account for the difference.

### E. Seed

Grain used as seed for the insured's own use shall be included in the APH database. The insured must furnish scale tickets or weight slips showing date of weighing, name of insured and commodity. The insured must also certify the amount of seed which was used for planting by:

(1) certifying to amount of the seed planted per acre; and
(2) certifying to and identifying the acreage on an aerial photo.

### F. IRR and NI Acreages

Separate APH databases must be determined for IRR and NI practices when IRR and NI practices are indicated on the actuarial documents.

**Exception:** When the planting pattern for the NI corners of a field continues into the IRR acreage of a center pivot or acres and production from the center pivot is not separated from the NI corners. For more information regarding reporting production from IRR and NI acreage, see Para. 1109.

### G. Acreage Adjustments

Acreage reported on the production report may require adjustments due to planting requirements and unplanted acreage. For additional information on specific crops see the following:

(1) acreage planted on a skip-row basis. See Part 11 for determining acreage adjustments for crops planted on a skip-row basis.

(2) Category C crops. See Part 18 for determining acreage adjustments for Category C crops; see also Part 19.

(3) tomatoes, peppers and sweet corn. See Part 19 for instructions for specific crops.

**H. UUF or Third Party Damage**

(1) Beginning with the 2018 crop year, in the event there is a loss of production due to UUF or a third party, the insured may choose to not include an actual yield or acres for the damaged acreage in the APH database and as a result reduced yields due to UUF/Third Party Damage will not impact the insured's approved APH yield when the following conditions are met:

(a) The insured must file a notice of loss with the AIP in accordance with the policy and procedures in the LAM or the loss will be treated the same as any other uninsured cause of loss.

(b) The AIP must determine whether the cause of loss is attributable to UUF or third party damage.

(i) The burden is on the insured to prove that the damage was due to UUF or a third party.

(ii) Each situation must be assessed on its individual merit and circumstances.

(iii) A total production loss on the damaged acreage is not required for such production to be considered under these procedures.

(2) Third party damage. Third party damage refers to situations in which the actions of a third party, outside of the control of the insured, result in production losses such as when a neighbor negligently applies chemicals and the resulting spray drift damages the insured's crop. The insured must be able to document that the production loss was due to the actions of a third party outside the control of the insured.

(3) UUF. UUF are fires caused by an uninsured cause of loss due to actions outside the control of the insured and are unavoidable. For example, fires caused by drivers throwing lit cigarettes out of a car window are clearly caused by third parties and are unavoidable; fires caused by an insured who sets a fire to burn brush which spreads and burns their crop was clearly caused by the insured and was avoidable. There are many variables that may impact whether a fire is avoidable and it is not possible to make a blanket determination of whether the cause of the fire is unavoidable. The insured must prove to the AIP that the fire was caused by actions outside the control of the insured and that such fire was unavoidable.

(4) Damage due to UUF/Third Party remains an uninsured cause of loss even if the acreage and production is not included in the APH database.

(a) An insured may choose to report production from acreage damaged by UUF or a third party and have it included in the APH database instead of excluding the damaged acreage in the APH database.

(b) Filing a notice of loss due to UUF/Third Party damage does not prohibit an insured from reporting production from the damaged acres and including such in the APH database. In such situations:

(i) do not modify the acreage report to reflect the acreage damaged by UUF or a third party. If the acreage report already identifies the acreage damaged by UUF or a third party, it does not need to be modified; and

(ii) the insured must sign the impacted APH database to indicate their choice to opt out of excluding such acreage and production on or before the PRD.

(5) When the requirements above are met, an insured may choose, on an APH database basis, to not include acreage and production damaged by UUF or a third party.

(a) The request must be made no later than the PRD. Filing a notice of loss for the UUF/Third Party damage and modifying the acreage report to identify the acreage damaged by UUF or a third party separately from acreage not damaged by UUF or a third party is considered to be the insured's request to not include acreage and production damaged by UUF or a third party in the APH database.

**Note**: See (4)(b) above if the insured decides to include such production and acreage in the APH database on or before the PRD.

(b) The request must be made the initial year the production from the acreage damaged by UUF or a third party is reported on the production report by the PRD and continues to apply in subsequent years.

(c) As allowed under APH procedures, the insured can recertify production in a subsequent year to include acreage and production from acreage damaged by UUF or a third party in the APH database. However, the request to not include such acreage and production can only be made the initial year such production and acreage is reported on the production report.

**Note**: Cups do not apply when calculating the current year's approved APH yields when production report(s) are recertified for this reason.

(d) The production and acreage from all acreage damaged by UUF or third party damage must be excluded from the APH database when any such acreage is excluded.

**Example**: 50 acres were damaged by a third party with varying degrees of damage. An insured cannot include the 20 acres with the least damage in the APH database while not including the other 30 acres damaged. All 50 acres damaged by UUF or a third party must not be included or all 50 acres are included.

(e) The production and acreage from the remaining acreage not damaged by UUF or a third party, if any, is included in the APH database and is used to calculate the approved APH yield. See Para. 1305G for production reporting requirements. See Para. 1236 for acreage report modifications to reflect the acreage damaged by UUF or a third party.

## 1311 Multi-Year Production Report

See Exh. 19 for example of the Multi-Year Production Report.

## 1312 Production Reporting Differences for ARPI and CCIP

The chart below highlights differences in production reporting requirement between ARPI and CCIP.

| PRODUCTION REPORTING | ARPI | CCIP |
|---|---|---|
| **Production Report Structure** | Required: crop/county by actuarial offer/share.<br>Allowed: lower level reporting, such as OU, field, etc. | Required: by unit (OU, BU, EU) by actuarial offer.<br>Allowed by lower level reporting, such as field, OU when insured as an EU, etc. |
| **Due Date** | PRD as provided in the actuarial documents. Production reports are due by PRD at the end of the policy crop year insured, e.g., production is reported at the end of the growing season to close out the policy crop year. | PRD – as defined in the policy, generally 45 days after cancellation date or the ARD, whichever is first. |
| **Supporting Documentation** | Supported by acceptable production records. | Supported by acceptable production records. |
| **Penalty for misreporting** | Protection factor limited to the lowest amount available for following year's policy; and assigned yield will apply if switching to an APH-based plan of insurance the following year. | Assigned yields apply; 75% of prior year's approved APH yield and loss of optional units in the following year. |
| **Production Report for Unharvested Production** | Producer certifies acreage as unharvested put to another use; or unharvested destroyed. If later transfers to APH-based plan of insurance; will not be included in the calculation of the approved APH yield. | Counted as zero production unless an appraisal for unharvested production is completed. |
| **Record type 57 reported to PASS** | Required. | Allowed. |
| **Quality Control Reviews** | Incorporated into the Appendix IV requirements using data mining for anomalies. | Appendix IV requirements; claims reviews. |

## 1313-1400 (Reserved)

# PART 14 PRODUCTION EVIDENCE
## Section 1 General Information

### 1401 Acceptable Production Evidence

Procedures in this section regarding acceptable production evidence to substantiate total production and acceptable production evidence to separate and document the production from different units are applicable for APH purposes. Production record requirements for indemnity purposes may be different. AIPs shall follow applicable loss adjustment standards to determine production record requirements for indemnity purposes.

### 1402 Certifying Production

#### A. Acceptable Supporting Production Evidence Required

Insureds must have acceptable production evidence to support the information on their production report. See Part 13 for production reporting requirements. Insureds are not required to submit production evidence unless requested by the AIP or RMA; however, they may choose to substantiate total production, acres and unit structure at the time of certification.

#### B. Types of Records

The records described in Section 2 and 3 are to be used by insureds as acceptable records to substantiate an insured's total certified production and for separating and documenting production from different units, provided the record clearly identifies the production by unit.

However, additional documentation is required to be submitted for certain crops in order for production records to be acceptable. See Parts 18, 19, 20, and 21 for additional information/record requirements for Category B crops, Category C crops, Dollar Plan, and Pecan Revenue.

#### C. Ensuring Records do not Duplicate Production

AIPs must carefully review each record of production to ensure multiple records have not been submitted for the same production.

**Example:** Insured A provides an elevator receipt for 10,000 bushels of corn dated November 15, and a FSA measurement service for 30,000 bushels of corn dated September 1. AIP must determine whether the 10,000 bushels of corn sold on November 15 was part of the 30,000 bushels measured by FSA.

#### D. APH Review Record Requirements

The insured must provide acceptable production records that support the certified production report at the time of a review, whenever an APH review is required.

### E. Questionable or Unreasonable

If any records appear questionable or if the amount of production on any of the acceptable record(s) appears unreasonable, the AIP/RMA may require the insured to provide supporting documentation to verify the certified production and/or its actual disposition.

(1) Verify the physical existence of the production.
(2) Require additional acceptable verifiable records (e.g., settlement sheets, etc.).

## 1403 Unit of Measure and Production Adjustments

The production provided on the record must contain both of the following to be an acceptable record of production:

### A. Unit of Measure

(1) The crop production must be provided in the unit of measure required by the policy, or in a unit of measure that can be converted to such basis.

(2) If converted, the method of conversion must be explained and maintained with the production records.

### B. Adjustments to Production

When the acceptable record provides moisture, foreign material, dockage, test weight, quality, grade, etc., the reported production from non-loss units will be adjusted by the basis of the acceptable production evidence. For loss situations see LAM for adjustments to production evidence on claims for indemnities. However, if such information is not included on the acceptable production evidence, production will not be adjusted. For example, livestock feeding records may not have factors to adjust production for moisture, foreign material, etc.; therefore, these records will not be adjusted for such factors.

This does not negate the varying record and/or crop requirements for production evidence. See sections 2, 3, and 4 of this Part and Part 19 for production evidence requirements by crop.

## 1404 Record Retention Period

Insureds must retain and, upon request, provide acceptable production evidence to substantiate total production and acceptable evidence to separate and document the production from different units. When requested, the production evidence must be provided on a unit basis or at a level that can be aggregated to the unit level. See Para. 1302.

Insured's must retain the acceptable records until the calendar date for the end of the insurance period of the third crop year after the crop year for which the production report was certified.

**Example 1:** Insured A submits a production report certifying production for the 2015 through 2018 crop years used for the 2019 APH database. All evidence substantiating the 2015 through 2018 crop year production must be retained until the calendar date for the end of the insurance period of the 2022 crop year.

**Example 2:** Insured B submits a production report certifying production for the 2018 crop year used for the 2019 APH database. All evidence substantiating the 2018 crop year production must be retained until the calendar date for the end of the insurance period of the 2022 crop year.

**Exception:** There may be rare situations when an insured no longer has production evidence due to a catastrophic event and cannot obtain records from a disinterested third party (e.g. insured's home is destroyed by wildfire and the elevator where production was delivered was also destroyed by wildfire).

In these rare situations, the AIP can accept the insured's certification as acceptable production evidence when:

- the insured certifies, in writing, to the catastrophic event, includes supporting satisfactory evidence of the circumstances leading to the insured no longer having production evidence and identifies why the insured cannot obtain records from a disinterested third party. For a vertically integrated producer, without disinterested third party records, the insured must document their process as a vertically integrated producer describing why records would not be available from a third party; and

- The AIP must agree, in writing, that certified yields are reasonable, the evidence provided by the insured is satisfactory, and supports a catastrophic event in which the production evidence was reasonably destroyed.

This procedure is applicable to APH reviews finalized after this directive's publication date and to 2018 Wildfires and Hurricanes where catastrophic events occurred.

**1404 Record Retention Period (Continued)**

AIPs or USDA may extend the record retention period beyond the three year period by notifying the insured of such extension in writing before the record retention period ends.

AIP or USDA may request/obtain production records from third parties after the record retention period expires if fraud or misrepresentation is suspected.

Anytime within the record retention period, AIPs and/or authorized USDA employees may request and review all production records. When requested by AIP or any authorized USDA employee, records of production evidence must be provided by the insured for all the applicable crop years.

**1405-1414 (Reserved)**

## Section 2 Acceptable Verifiable Records

### 1415 Crops Requiring Verifiable Records

Verifiable production evidence is considered an acceptable record, if it meets the requirements of Para.1416-1421 as applicable for the crop. Verifiable production evidence is required for following crops:

- Almonds
- Apples
- Blueberries
- Citrus (Arizona-California and Texas Citrus Fruit)
- Cranberries
- Dry Beans (Contract Seed Beans)
- Dry Peas (Contract Seed Peas)
- Figs
- Forage Production (sold production)
- Florida Avocados
- Grapes
- Green Peas
- Macadamia Nuts
- Onions
- Pears
- Peaches
- Peanuts
- Plums
- Potatoes
- Processing Beans
- Processing Sweet Corn
- Prunes
- Stonefruit (Apricots, Nectarines and Peaches)
- Sugarcane
- Sugar Beets
- Table Grapes
- Tobacco
- Tomatoes (Processing and Fresh Market Production Guarantee Plan)
- Walnuts

### 1416 Records of Production Commercially Sold To or Stored By a Disinterested Third-Party

**A. Records**

The following records, or similar records, from a disinterested third party of commercially sold or stored production are acceptable when all the information in Para. B is provided.

- Gin Records
- Ledger Sheets
- Load Summaries
- Marketing Outlet Records
- Processor Records
- Buyer Records
- Distiller Records
- First Handler Records
- Warehouse Receipts
- Elevator Receipts
- Settlement Sheets
- Storage Facility Records
- Packer Records
- Broker Records
- Boiler House Records

### B. Required Information

The following information must be included on the record for the record to be acceptable (if items (6) through (9) below are not provided on the record, the insured must provide this information separately):

(1) crop;
(2) quantity of production that can be converted to the proper unit of measure, if necessary;
(3) name of insured;
(4) date of transaction;
(5) name of warehouse, elevator, marketing outlet, storage facility, processor, packer, buyer, broker, distiller, boiler house or first handler, as applicable;
(6) the unit number, block number, or location of the production;
(7) practice and type of crop;
(8) crop year commodity was produced; and
(9) planting period from which production was produced, if actuarial documents designate separate planting periods for the crop.

## 1417 Claim for Indemnity

If the production used for a claim determination was reduced see Para. 1310B for instructions to add back the reduced production amount when allowed.

## 1418 FSA or CCC Verified Documents

To be acceptable, the FSA or CCC document must provide evidence of production that was determined and verified by an authorized representative of FSA or CCC. The FSA and CCC documents that provide an insured's certification of production or an estimate of production are not acceptable records for substantiating production. Many FSA and CCC loan documents include the amount of production; however, in most cases, neither FSA nor CCC determines or verifies the existence of the amount of production listed on such documents.

## 1419 Authorized AIP or FSA Personnel Appraisals of Unharvested Acreage

The following is applicable for an unharvested acreage appraisal performed by a(n) authorized AIP or FSA personnel to be acceptable.

### A. Subject to review

Appraisals used as acceptable verifiable records for substantiating production are subject to AIP review to verify the accuracy of the appraisal, the same as other acceptable records are subject to review.

**B. Appraisal worksheets**

Properly completed appraisal worksheets are considered acceptable verifiable production records for acreage that is appraised.

**C. Production by P/T**

Appraised production must correspond to the insurable P/T for the county indicated on the acreage report.

**D. Use of production worksheet**

If the insured has not or will not file a claim for indemnity, AIP may complete a production worksheet, to use as production evidence.

**E. Representative sample areas**

See LAM for applicable appraisal requirements.

**F. Exceptions**

(1) Appraisals of production of unharvested acreage when, based on the consent of the AIP, the insured leaves representative sample areas of the crop, in accordance with the CP and LAM, provides sufficient care of the crop in the sample areas, and harvests the sample areas. Actual harvested records from the sample areas must be used in such situations.

(2) Appraisals of production lost due to an uninsured cause of loss.

(3) Appraisals of production of a crop that was destroyed or put to another use without the consent of the AIP.

(4) Pre-harvest appraisals alone are not acceptable records unless a claim for indemnity is involved for the following crops that allow pick records.

## 1419 Authorized AIP or FSA Personnel Appraisals of Unharvested Acreage (Continued)

**F. Exceptions (continued)**

- Category C crops
- Dry Beans (Contract Seed Beans)
- Onions
- Forage Production (sold production)
- Peanuts
- Potatoes (Northern, Central and Southern)
- Green Peas
- Tomatoes (Processing and Fresh Market Guaranteed Production Plan)
- Pecan Revenue
- Processing Sweet Corn
- Processing Beans
- Sugar Beets
- Sugarcane
- Tobacco

## 1420 Authorized AIP or FSA Personnel Measurement of Farm Stored Production

To be acceptable the production determined from measurements of farm stored production must be based on the use of applicable pack factors for the following crops. (See the appropriate Crop LASH for pack factors and the LAM for calculating production using pack factors.)

(1) Barley
(2) Corn
(3) Grain Sorghum
(4) Oats
(5) Popcorn
(6) Rice
(7) Soybeans
(8) Wheat

## 1421 Pre-harvest Appraisal and Other Record Types

**A. Pre-Harvest Appraisals**

(1) A pre-harvest appraisal, performed by the AIP or RMA, may be required by the policy if production is marketed directly to consumers see Section 5. This appraisal is used as supporting documentation in conjunction with pick records, machine harvest records, and/or daily sales records.

**Exception:** For vertically integrated producers see Section 4, a pre-harvest appraisal alone is an acceptable production record.

(2) RMA may waive the requirement for a pre-harvest appraisal if both of the following are met:

(a) actuarial documents for the crop allow for waiver.

**A. Pre-Harvest Appraisals (Continued)**

(b) RMA determines, based on evidence provided by the insured, that acceptable substantiating evidence is being maintained by the insured.

(3) Pre-harvest appraisals alone cannot be used to substantiate fresh market production.

**B. Pick Records**

Pick records, that are piece rate based, alone are considered acceptable production records unless the policy requires a pre-harvest appraisal and/or records of sold production.

Pick records must be legible and include all of the following to be acceptable.

(1) The name of the person(s) paid by the grower for the harvest of the crop. The person can be an individual or business entity who is designated as the "picker" of the crop.

(2) The date the crop was picked, the location of the crop, the price paid per volume picked and must support the production report provided by the insured, e.g., unit/P/T. The price paid must be on the basis of the insurable unit of measure and weight. When applicable, the volumes of the field containers must be provided (e.g., bins) and any applicable volume/weight of the pieces picked.

(3) Verifiable proof of payment to the picker(s) for the harvesting of the crop. Any of following is acceptable verifiable proof of payment.

(a) Photocopy of cancelled check(s) to picker showing the banking institutions stamp of payment.

(b) Photocopy of payments made to Social Security Administration for tax payments made on behalf of picker(s).

(c) Other proof of payment to the picker, e.g., paid invoice, other bank certification of payment.

(4) The insured must reconcile the pick record to their certification on the production report including the calculations used to determine the total production certified by the insured and must reconcile the location on the pick record to the appropriate production report.

Upon request of RMA or the AIP, a photocopy of all pick records for the applicable crop year must be provided by the insured. When applicable, the photocopies must be of the actual daily running tallies of production harvested by each picker and location.

**B. Pick Records (continued)**

If the AIP determines it is not feasible to provide a photocopy of all pick records, a summary that itemizes each picker's total with an example of the pick records used to calculate the total may be acceptable. The total payments made for each picker must reconcile to the total production picked by the picker (i.e., fields picked by the picker on hourly wage must reconcile to the amount of production delivered from the applicable fields/units picked by the picker).

**C. Machine Harvest Records**

Machine harvest records alone are considered acceptable production records unless the policy requires a pre-harvest appraisal and/or records of sold production.

Machine harvest records must be legible and include all of the following to be acceptable.

(1) The insured's name
(2) The name of the crop
(3) The date of harvest
(4) The unit number or the location of the production
(5) The practice, type, and crop year
(6) The quantity of weighed production

**D. Daily Sales Records**

Daily sales records alone are considered acceptable production records unless the policy requires a pre-harvest appraisal and/or records of sold production. Daily sales records must meet both of the following to be acceptable.

(1) A photocopy of the insured's actual daily account ledger.

(2) Accompanied by tax forms or other receipts verifying income from the sale of the crop.

**E. Tax Records**

Unless otherwise stated see Para. 1437, tax records alone are not considered acceptable production records. AIPs may use tax records in combination with other records for verification, such as to substantiate direct sales (e.g., identify income and production derived from the sale); or verification of payments paid to pickers when pick records are provided.

Tax records, such as Schedule F Forms, when used in combination with other records, may be used to identify the income received from the sale of the harvested crops; allowing the total production derived from the crop to be determined.

**E. Tax Records (Continued)**

| | |
|---|---|
| Milk (including any premiums received) | $233,874 |
| Steers and calves raised* on the operation | $7,914 |
| Miscellaneous vegetables grown & sold | $5,457 |
| Pecans ($7,286), Peaches ($8,944), and wheat ($8,543) sold | $24,773 |
| **Total reported on line2** | **$272,018** |

* Raised other than for draft, breeding, sport, or dairy purposes

For example, on Line 2 of the Schedule F form the insured enters the income received during the previous crop year from the sales of crops produced within their operation. This income amount is reflective of the total income received from the sale of the applicable crop.

**F. Unacceptable Records**

Production summaries or estimates of production are not acceptable regardless of who provides the summary or estimate.

**1422-1430 (Reserved)**

## Section 3 Acceptable Farm Management Records

### 1431 Crops that Qualify for Farm Management Records

Farm management records, as well as acceptable verifiable records, are considered acceptable records (if they meet the requirements of Para. 1432-1435) for the following crops:

- Barley
- Buckwheat
- Canola/Rapeseed
- Corn
- Cotton
- Cultivated Wild Rice
- Dry Beans (except Contract Seed Beans)
- Dry Peas (except Contract Seed Peas)
- ELS Cotton
- Flax
- Forage Production (fed and farm-stored)
- Grain Sorghum
- Millet
- Mint
- Oats
- Popcorn
- Rice
- Rye
- Safflower
- Soybeans
- Sunflower Seed
- Wheat

### 1432 Measurement of Farm Stored Production by Insured

#### A. Crop Applicability

An insured's measurement of farm stored production may be accepted for the crops listed in Para. 1431.

**Exception:** For Dry Peas farm storage measurements are acceptable, provided there are accompanying grade certificates to appropriately adjust production according to the SP quality requirements.

#### B. Central Drying/Storage Facilities

When central drying/storage facilities are used to store the production from multiple units (including different P/T/TMA), insureds must maintain written records that reflect the production from each unit/P/T/TMA prior to being placed in the structure if separate structure measurements will not be made for each unit.

### 1433 Automated Yield Monitoring Systems

If the insured elects to use yield monitoring technology as production evidence, the following requirements must be met.

#### A. Calibration

The yield monitoring system must be calibrated, by crop, in accordance with the owner's manual specifications. The sensor calibration must result in an error rate of three percent or less based on actual production from the sample acres.

**A. Calibration (Continued)**

(1) If the sensor calibration difference exceeds the three percent error rate when compared to the actual production harvested from the sample acres, additional sensor calibration(s) must be made until the results are within the acceptable error rate of three percent or less.

(2) If, after additional sensor calibrations of the yield monitoring system are performed as stated in (1) above, and the error rate still exceeds three percent of the actual production harvested from the sample acres, the insured may use a post-harvest calibration.

(3) If the insured is using a post-harvest calibration as their production evidence, the insured must provide documentation of the actual production harvested based on acceptable verifiable weight records that were used to post-harvest calibrate the yield monitoring system.

**B. Annual Calibration Report**

The annual calibration report, from the yield monitor system or documentation from the insured, must include all sensor calibrations and adjustments performed, by crop, for the crop year, including the date each sensor calibration/adjustment was performed and the percentage change from the previous setting.

The annual calibration report must be provided to AIP or RMA upon request.

**C. Yield Map or Summary Report**

The insured must provide to the AIP or RMA, upon request, either a yield map or a production summary report generated by the yield monitoring system, which provides all of the following, by P/T/TMA (if items a - d below are not provided in the summary report or on a yield map, the insured must provide this information separately).

(a) Insured's name
(b) Unit number
(c) FSA farm/tract/field ID number (optional)
(d) Legal description of acreage
(e) Crop name
(f) Acres harvested
(g) Harvest date
(h) Total weight
(i) Total yield (unadjusted for moisture)
(j) Average moisture
(k) Total dry weight/yield adjusted for moisture, as required by the CP, actuarial documents and loss claims standards

**C. Yield Map or Summary Report (continued)**

For those insureds that are using yield mapping technology the items below may also be included with the yield map report.

(a) GPS/GIS referenced colored map depicting yield variations
(b) GPS/GIS legend map key indicating ranges in yield variations

## 1434 Livestock Feeding Records

AIPs should encourage insureds who feed all or a portion of the harvested production to have the total amount of production determined by the AIP, or to utilize other allowable farm management records prior to feeding. Contemporaneous livestock feeding records will not be required if all production is determined by the AIP or by other allowable farm management records prior to insured feeding production.

If production from the current year will be commingled with production from the prior year(s), the amount of the prior year(s) production must be measured by AIP or FSA before the beginning of harvest of the current year production.

Insureds request to measure prior year(s) production must be made at least 15 days before the beginning of harvest of the current year production to allow time for the AIP to conduct a field visit.

To be acceptable, feeding records must meet all of the following requirements.

(1) Be in writing

(2) Identify the crop year in which fed production was harvested

(3) Provide the unit number from which the fed production was harvested

(4) Be contemporaneous for each feeding as the feeding occurs

(5) Provide the amount of production, by crop, fed at each feeding

## 1435 Field Harvest Records

Field harvest records include records of production determined from any of the following.

(1) Truck, wagon or hopper loads that are documented by weight tickets, grain carts or conveyance measurements.

(2) Separate measurements of production, by unit, when placed in farm storage structures.

(3) Cotton module measurements.

## Section 4 Vertically Integrated

### 1436 Vertically Integrated Producer Defined

A producer is vertically integrated when all stages of production of a crop, from acquisition of materials to the retailing or use of the final product, are controlled by one person, or by different persons that are related.

### 1437 Acceptable Records for Vertically Integrated Producers

When an insured is vertically integrated and cannot provide records of production from a disinterested third party, the production evidence listed in Section 2 can be submitted independently as acceptable production records. In addition, records contained in A and B below may be provided as stand-alone acceptable production records.

**A. Certified Scale Weight Records**

Certified scale weight records alone are considered to be acceptable production records, unless the CP requires a pre-harvest appraisal and/or records of sold production. Certified scale weight records must be legible and include all of the following to be acceptable.

(1) The insured's name
(2) The name of the crop
(3) The date of harvest or the date weighed
(4) The unit number or the location of the production
(5) The practice, type, and crop year
(6) The quantity/weighed production. For wineries that process their own grapes, the weight can be recorded on the form used for reporting to the Alcohol and Tobacco Tax and Trade Bureau.

**B. Tax Records**

See Para. 1421 E.

### 1438 Required Documentation

AIPs must advise vertically integrated insureds with more than one producer's production present in the vertically integrated operation, that upon request, the insured must provide a statement of the insured's internal control procedures and processes. The statement must substantiate how the vertically integrated insured's production is kept separate from the production of other producers whose crop(s) are handled or marketed through the same operation, packing or processing facility or marketing. For example, a vertically integrated insured may provide producer load(s) or end of season payment summaries that are in accordance with Section 2 (see Para. 1416). All documentation submitted must be legible.

### 1439-1450 (Reserved)

## Part 5 Direct Marketing

### 1451 Direct Marketing Defined

A crop is direct marketed when the insured crop is sold directly to consumers without the intervention of an intermediary such as a wholesaler, retailer, packer, processor, shipper, buyer or broker. Examples of direct marketing include selling through an on-farm or roadside stand, or a farmer's market, and permitting the general public to enter the field for the purpose of picking all or a portion of the crop.

### 1452 Direct Marketing Requirements

For acreage with production that will be sold by direct marketing, if insurance is permitted by the SPs or by WA, the insured must notify the AIP at least 15 days before any production from the insured acreage will be sold by direct marketing.

### 1453 Acceptable Records for Direct Marketing Producers

For direct-marketed production as provided by the SP, follow acceptable production evidence guidelines in Para. 1421.

### 1454-1500 (Reserved)

# PART 15 APH DATABASE
## Section 1 General Information

### 1501 APH Database Requirements

The production reports provided by the insured are used by the verifier to establish the APH database for CCIP policies. The APH database consists of all years of production (within the base period) reported by the insured and is used to calculate the approved APH yield. The APH database may also be used as the insured's production report(s).

If insured on a continuous basis, all actual and assigned yields from the past APH database within the base period must be used; however, assigned yields may be replaced with actual yields. This includes policies that have been canceled and rewritten or transferred.

For specific procedure to calculate the approved APH yield, see Part 19, Section 1 for Category B and Part 19, Section 2 for Category C crops. The APH database is used to establish and maintain or update the yield history for a farming operation by crop, unit/P/T/TMA. Supporting evidence (records), when required, must meet acreage and production requirements outlined in Part 14. AIPs are required to calculate preliminary yields for new insureds and are authorized to calculate approved APH yields.

### 1502 The Base Period

The base period for the APH database for Category B and Category C crops consists of the 10 most recent APH crop years, except:

(1) crops with a lag year:

(a) AZ-CA Citrus;
(b) Macadamia Nuts;
(c) Sugarcane;
(d) Texas Citrus Fruit; and
(e) CT & MA Tobacco (cigar wrapper).

For example, the APH database base period begins with the 2018 APH crop year for the 2019 policy crop year.

(2) apples and peaches have a base period of the five most recent APH crop years.

### 1503 Types of Yields

#### A. Acceptable Production Reports Filed

When acceptable production reports for the crop and county have been submitted by the PRD, the APH database will be updated with the following types of yields:

**A. Acceptable Production Reports Filed (continued)**

(1) actual yields from:

(a) claim forms, or
(b) production reports.

(2) applicable variable T-Yields if less than four years of actual and/or assigned yields are available for the database.

(a) The T-Yield percentage is determined by the number of actual/assigned yields available for the crop in the county, except, for new producers and for new insureds if farming entirely different land. For variable T-Yield purposes, AIPs may retain APH databases established for land previously contained in the farming operation that is no longer in the current farming operation. Additionally, a year when the entire crop was short-rated, was damaged by UUF or a third party or was an uninsured second crop may count as a year of actual yields for determining T-Yield percentage, see Para. 1304 F, 1304I and 1305 B. See chart for yield indicators and descriptors in Exh. 15 to identify whether a yield counts as a yield of records for determining variable T-Yield percentage.

(b) To meet the four year minimum yield requirement, variable T-Yield percentage determinations are made as follows:

(i) no years of actual/assigned yields, 65 percent of the applicable T-Yield.

(ii) one year of actual/assigned yield, 80 percent of the applicable T-Yield.

(iii) two years of actual/assigned yields, 90 percent of the applicable T-Yield.

(iv) three years or more of actual/assigned yields, 100 percent of the applicable T-Yield.

If added land or new crop/P/T, see Part 17 section 9 and Para. 1788 for procedure to determine approved yields.

(3) temporary yields which are the prior year's approved APH yield, used only as a temporary yield (by unit) for the most recent year in the base period if an insured is unable to finish harvest (due to an insurable cause), it is a delayed claim, or records are unavailable from the processor or marketing outlets by the PRD.

(a) The temporary yield is considered an actual yield when determining the number of actual and assigned yields for APH database calculation purposes.

(b) Insureds using a temporary yield may retain OUs for the current crop year.

**A. Acceptable Production Reports Filed (continued)**

(c) The temporary yield is valid for one year only. A production report indicating the actual yield for that year must be filed by the following year's PRD or assigned yield provisions will apply.

(d) Temporary yields are not updated when the insured provides a production report or a claim is finalized after the PRD for the current crop year.

**Exception:** In very limited situations, e.g., a delayed claim, a production report may not be available for an additional crop year (after the second most recent APH crop year's PRD). In these situations the AIP will replace the temporary yield descriptor of "J" with "JJ". The yield descriptor of "JJ" will be 100 percent of the prior year's approved APH yield.

(4) zero-planted acres yields for annual crops with zero-planted acres (by unit, P/T/TMA). Enter zero (0.0) in the Acres Column and a Z in the Yield Column of the APH database.

(a) Do not count a year of zero-planted acres (by unit and by P/T/TMA if applicable) when determining the number of years of actual and assigned yields.

(b) The yield descriptor Z is entered in the APH database primarily to indicate continuity of production reports.

(c) If the APH database requires removal of a zero-planted year to provide space to retain an actual/assigned yield, remove the oldest zero-planted year. See Part 18 for Category C crops.

**B. Acceptable Production Reports Not Submitted**

For carryover insureds when acceptable production reports are required but not submitted for all units, the APH database(s) will be updated in the following order when applicable:

(1) actual yields and appraised potential production from loss claims, if any.

(2) assigned yields –75 percent of the prior year's approved APH yield for the same unit (by area classification, P/T/TMA). When no prior year's approved APH yield is available then the assigned yield is 65 percent of the applicable T-Yield.

**Exception:** If actual yield determined by the review is less than the assigned yield, the actual yield must be used.

**Exception:** Unless the insured qualifies under Para. 1597 exceptions to assigned yields.

**B. Acceptable Production Reports Not Submitted (Continued)**

(3) variable T-Yields, when no prior approved yield exists, and there are less than four years of actual and/or assigned yields available for the APH database. See Para. 1503A.

The insured will not qualify for OUs unless loss records account for all units, or other exceptions apply see Para. 1024-1027.

## 1504 Yield Descriptors

Yield descriptors are required to identify the types of yields entered in APH databases and must be indicated on the yield records transmitted to RMA. See Exh. 15 for a listing of the Yield Descriptors. Appendix III also has a listing of yield descriptor and may include additional yield descriptors for plans and crops not addressed in the CIH, such as pilot crop programs.

**Note:** Beginning with the 2017 crop year, certified organic actual yield descriptor "V" and transitional actual yield descriptor "G" will no longer be used when establishing APH databases for certified organic or transitional acreage.

For existing certified organic APH databases established in prior crop years which still contain transitional yields being used as a T-Yield (identified with a "G" yield descriptor), continue to use any "G" yield descriptors until they are rolled out of such APH databases. Convert any "V" yield descriptors identifying certified organic yields to an "A" yield descriptor. Additionally, convert all other yields identified with variations of the "V" yield descriptor (e.g., "VP", "VW", "VX", etc.) to the applicable descriptor of actual yields ("PP", "PW", "AX", etc.).

For existing transitional APH databases, convert any "G" yield descriptors identifying actual transitional production to an "A" yield descriptor. Additionally, convert all other yields identified with variations of the "G" yield descriptor (e.g., "GP", "GW", "GX", etc.) to the corresponding yield descriptor of actual yields ("PP", "PW", "AX", etc.).

For crop year 2014 only, AIPs were required to convert any applicable T-Yields in existing 2013 APH databases to organic determined yields. These yields are identified by an "OG" yield descriptor.

## 1505 Required Separate APH Database

Any yield adjustments, limitations or reductions will be determined on an APH database basis. No further division of APH databases is authorized. APH databases are established by:

**A. Units**

The verifier shall not establish an APH database below the lowest level authorized by the policy (e.g., if CP authorizes OUs, APH databases cannot be established lower than OUs by P/T/TMA) unless it is one of the exceptions listed in 1505E below. This does not prohibit the insured and AIP from maintaining production reports at a lower level (e.g., field level). However, production reports by the insureds must be combined, when necessary by the AIP to determine the approved APH yield in the APH database.

Acres and production prorated between BUs are not acceptable records for BUs unless prorated on a claim for indemnity.

**Exception:** When BUs are assigned due to the determination that planting requirements for an EU are not met in accordance with Part 10, APH databases for BUs may be established after the PRD using procedures in Part 10. This is only allowed in those instances when the insured does not have APH databases established and maintained at the BU level.

**B. P/T**

AIPs must establish a separate APH database for each P/T listed on the actuarial documents that has been carried out and/or will be carried out for the current crop year, regardless if the T-Yields are the same. Refer to Part 11 Section 3 for establishing APH databases for corn, grain sorghum, and cotton, when skip-row is an applicable practice. See also Part 17 Section 3 and Part 18 and 19 for additional reporting P/T requirements.

**Exception:** For those category C crops where the end use is identified as a type on the actuarial documents, such as the types Fresh and Processing for apples, a separate APH database by type is not required if it is for the same exact acreage. For example, a block of apples would be reported in an APH database containing the applicable production reports by crop year, an APH database would not be established for each end use of processing and/or fresh if for the same acreage.

An AIP could transmit the block of apples contained in the APH database as processing in CY 2017 and submit as fresh in CY 2018. Maintaining the block of apples by APH database allows an AIP to assure that any production minimums contained in the policy are met, allows continuous production record for Category C, allows high variability testing to be performed, etc., see Part 18.

Previously established APH databases for P/Ts with the same T-Yield must be separated according to the actuarial structure. APH databases may be separated by duplicating prior years' history for each P/T in this situation only. Yield descriptors DA, DV and DG will be used to identify such duplicated actual production history. Production and acres for each P/T must be reported and maintained separate in subsequent years. See Exh. 15.

**C. TMA**

Except where weighted average T-Yields are required, AIPs must establish an APH database for each T-Yield map area if different T-Yields are established and different area classifications, including high-risk land, are provided in the actuarial documents.

Separate APH databases for area classifications that are for a rate only are not permitted unless such acreage is excluded under a High–Risk Land Exclusion Option.

**D. Other Characteristics**

For Category C crops only, the actuarial documents may provide T-yields by other characteristic, such as age/leaf year, density, and early/mid/late season.

**E. Exceptions, Other Situations Requiring an APH Database**

An AIP may establish multiple APH databases by unit/P/T/TMA/Other Characteristics only for the situations listed below.

When reporting to RMA, the AIP must transmit these exceptions with an APH Procedural Exception Code. The APH Procedural Exception Code is an alpha-numeric four digit code, e.g., 001A. The first three numbers represent the unique record number within the unit/P/T/TMA/Other Characteristics. The last character is the alpha exception code.

(1) Added land see Part 17 Section 9, Exception Code - A;

(2) Block reporting for Category C crops see Part 18 Section 7, Exception Code - B;

(3) Combination/division of unit see Part 10 Section 7, Exception Code – C;

(4) Skip-Row Grain Sorghum see Para. 1147; Exception Code – S;

(5) Multiple plant dates by year within a P/T see Part 17 Section 3; only applicable for forage seed, mint, and sugarcane; Exception Code – P;

(6) Newly broken acreage required to be maintained in a separate APH database the initial year of new breaking; Exception Code – N;

(7) Acreage emerging from a USDA program required to be maintained in a separate APH database the initial year it is planted see Para. 1763; Exception Code – R;

(8) Native sod acreage required to be maintained in a separate APH database for the first four crop years of planting; Exception Code – D; and

(9) Acreage transitioning to certified organic practice without an organic plan and insured under the conventional practice, see Para. 1702Q; Exception Code – T.

## 1506 Production or Acreage Not to be Included

Do not include production or acreage from uninsurable/uninsured acreage in the APH database, unless commingled with insured production, see Para. 1305.

## 1507 Transfer of APH Data

When all the following requirements are met, an AIP may transfer certain APH database actual yields of an insured to another person who is taking over all or part of an insured farming operation.

### A. Basic Requirements

When an insured with an approved APH yield transfers all or part of their operation to another person, the AIP may transfer the insured's (transferor) actual yields for the acreage being transferred to the other person (transferee), provided the transferee meets both of the following:

(1) participated in the operation and establishment of the approved APH yield for the acreage being transferred, or had a share of the crop on the acreage being transferred.

(a) Participated in the operation and establishment of the approved APH yield means the transferee did both of the following in the years for which the transfer is requested:

(i) participated in the management decisions regarding the acreage being transferred; and

(ii) performed the physical activities necessary to produce the crop on the acreage being transferred.

(b) Persons who provided management only do not meet the eligibility requirements for transfer of actual yields.

(c) Persons who provided physical labor only do not meet the eligibility requirements for transfer of actual yields.

(2) provides AIP with verifiable evidence which indicates the transfer of the actual yields for the applicable acreage is appropriate.

### B. Years of Actual Yields Eligible for Transfer

AIPs may only transfer those years for which there is an actual yield and the transferee meets the requirements in Para.1507A. Years with non-actual or assigned yields are considered a break in continuity of production reports for APH transfer purposes and cannot be transferred regardless of whether the transferee meets the requirements in Para. 1507A for those years. Actual yields prior to the break in continuity cannot be used.

**C. Non-Actual Yields Transfer**

A person change in name only with no other changes to the farming operation (e.g., an individual or partnership incorporates without adding new members or changing existing members), all existing years of the APH database, actual and non-actual/assigned yields (including SA T-Yields), will transfer to the new person. If members are added or changed, non-actual /assigned yields (including SA-T Yields) do not transfer. If a partnership or other entity is dissolved and the land is split between members, non-actual/assigned yields (including SA T-Yields) do not transfer.

**D. Examples**

**Example 1:** Insured A, has a corn APH database comprised of 6 crop years of actual yields. For all 6 crop years, Producer B has been participating in management decisions and assisting in performing all the physical activities necessary to produce corn on 500 acres insured by Insured A. Producer B will be taking over the entire operation and has requested a transfer of Insured A's APH yield history.

As long as Producer B provides the AIP with verifiable evidence indicating the transfer of yield history is appropriate, the AIP may transfer the actual yields for all 6 crop years.

**Example 2:** Insured B has a corn APH database comprised of 10 crop years of actual yields. For 3 of the last 10 crop years, Producer C has been participating in management decisions and performing some of the physical activities necessary to produce corn on 750 acres insured by Insured B. Producer C will be taking over the entire operation, and has requested a transfer of Insured B's APH yield history.

As long as, Producer C provides the AIP with verifiable evidence indicating the transfer of actual yields is appropriate, the AIP may transfer the actual yields for the last 3 crop years only due to Producer C not meeting the transferee requirements for all 10 crop years.

**Example 3:** Insured D has a corn APH database comprised of 10 crop years of actual yields. For all 10 crop years, Producer E has maintained all the accounts and ledgers for Insured D's entire operation. Producer E has not participated in any management decisions, nor has he provided any physical labor necessary to produce the crop. Producer E will be taking over the entire operation, and has requested a transfer of Insured D's actual yields.

The AIP cannot transfer any actual yields because Producer E does not meet the transferee eligibility requirements.

**Example 4:** Insured F has a corn APH database comprised of 10 crop years of actual yields. For all 10 crop years, Producer G has participated in all management decisions and performed all physical activities necessary to produce the crop. Producer G will be taking over 300 acres of Unit 0001-0004 consisting of 600 acres and has requested a transfer of Insured F's actual yields.

The AIP can transfer actual yields only for the 300 acres being transferred to Producer G. See Part 10 Section 7 for instructions on dividing units.

## 1508 Use of Another Person's Production History - BFR

A BFR may use the APH of the previous producer when the BFR (transferee) was previously involved in the farming or ranching operation. When all of the requirements of this paragraph are met, an AIP may transfer APH database actual yields of another insured to the BFR when it is higher than what the approved APH yield would be based on the variable T-Yield. However, this benefit is not applicable when a person is required to use another person's history due to insureds changing or land being transferred to another person as required in Para. 1510. In such instances, the procedure contained in Para. 1510 must be followed and this paragraph will not apply.

### A. Basic Requirements

When an insured with an approved APH yield transfers acreage to a BFR, the AIP may transfer the previous insured's actual yields for the acreage to the BFR. To qualify for the use of the previous insured's production history, the BFR must meet both of the following:

(1) The BFR must have been previously involved in the farming or ranching operation's:

(a) decision making necessary to produce the crop or livestock on the farm; or
(b) physical activities necessary to produce the crop or livestock on the farm; and

(2) The BFR must provide the AIP with verifiable evidence indicating the involvement in the farming or ranching operation decision making or physical activities.

### B. Approved APH Yield Determinations

(1) When establishing APH databases for BFRs who qualify to use the production history from the previous insured for the transferred acreage, use the higher of:

(a) the approved APH yield calculated from the transfer of actual yields from the APH database of the previous insured on the acreage transferred; or

(b) the applicable variable T-Yield (see Para. 1503 of the CIH), unless the insured qualifies as a new producer. If the insured qualifies as a new producer, 100 percent of the applicable T-Yield will apply when 100 percent of the T-Yield is higher than the approved APH yield in (1)(a). In such instances, follow the new producer procedures contained in Part 17, Section 5.

**B. Approved APH Yield Determinations (continued)**

(2) AIPs may only transfer production history for those years for which there is an actual yield.

(a) Years with non-actual or assigned yields are considered a break in continuity of production reports for APH transfer purposes and cannot be transferred.

(b) Actual yields prior to the break in continuity cannot be used.

(c) Actual yields transferred must be identified with the yield descriptor of "BF" to denote they are actual yields that have been transferred to a BFR, with the exception of:

(i) actual yields less than 60 percent of the T-Yield that do not qualify for yield substitutions identified with the yield descriptors of AY and WY. These yields should continue to be identified with their original yield descriptor;

**Note:** When a yield identified with a NA, NG or NV yield descriptor is transferred to a BFR, the yield should be identified with a BF yield descriptor unless the BFR chooses to not substitute the transferred actual yield that is less than 60 percent of the T-Yield and qualifies for yield adjustment. In this situation, the yield descriptors of NA, NG or NV, as appropriate, should be used.

(ii) transitional yields, for acreage transitioning to certified organic, identified with G, PG, DG, GW yield descriptors in certified organic APH databases only. These yields should continue to be identified with their original yield descriptor; and

(iii) actual yields that are reduced or replaced identified with the yield descriptors of AC, AX, EX, IX, NX, and TX. These yields should continue to be identified with their original yield descriptor.

(3) Insureds must obtain either:

(a) permission to use the other person's production reports/APH databases for the current crop year; or

(b) copies of the other person's acreage and production records.

**B. Approved APH Yield Determinations (continued)**

(4) The BFR will only be required to maintain production records within the record retention period of the previous insured to support the transferred actual yields. If acceptable production evidence is not available for all such crop years, then the other person's APH database(s) may not be used. The insured using another person's production reports/APH databases is responsible for providing acceptable production evidence for APH reviews.

(5) Unlike the Transfer of APH Data in Para. 1507, the number of years of production history that may be transferred is NOT limited by the number of years the BFR was previously involved in the other person's farming or ranching operation. However, a BFR can only use another person's production history for a crop that the BFR was previously involved in. If the BFR was involved with livestock, the BFR can use the other person's livestock records. If the BFR was involved with a crop, the BFR can use the other person's crop production records, provided all of the requirements in this paragraph are met. Only the production history of the specific acreage being transferred may be transferred to the BFR.

## 1509 Use of Another Person's Acreage and Production History

When an insured has not maintained acceptable records or has not previously produced the crop on a specific land location (legal description), acreage and production evidence from another person (either insured or not insured) may be used to support production reports certified by the insured. (Transfer of farming operation has not occurred.)

**A. General Requirements**

(1) To use another person's actual records the other person must:

(a) share in the crop on that land location for the current crop year; or

(b) when APH data is transferred to the insured's policy from another policy for that land location on which the insured shared in the insured crop's production see Para. 1507.

(2) Insureds must obtain either:

(a) permission to use the other person's APH production reports/databases for the current crop year; or

(b) copies of the other person's acreage and production records.

(3) Non-actual yields, such as SA T-Yields and assigned yields, contained in the other person's APH database are not transferred/used. Assigned yields break continuity of records for insureds using another person's production reports/database to establish their own APH databases.

**A. General Requirements (Continued)**

(4) Insureds must certify only the acreage and production history from locations where they share in the crop (same acreage, legal description, FN, etc.) on their production reports.

(5) Production and acreage history for all years for the appropriate locations must be reported, unless fewer years of acceptable production reports have been provided for the balance of the insured's farming operation.

If fewer total years have been reported on other units and the insured did not report all years that the crop was produced on those units, the number of years that may be used from the new acreage is limited to those provided for the other units.

**Example:** The insured previously had one BU (0001-0000BU) in the farming operation. Although the crop had been produced for 10 years, the APH database only contains production for the five most recent consecutive APH crop years. Insured adds unit 0002-0000BU for the current crop year.

The APH database obtained from another person sharing in the crop contains ten years of production history. However, the insured may only use the five most recent APH crop years for unit 0002-0000BU because only the five most recent APH crop years were reported for unit 0001-0000BU.

(6) All other APH requirements must be met.

(7) Production evidence must be available for all crop years within the record retention period of the person from which the APH databases were obtained. If acceptable production evidence is not available for all such crop years, then the other person's APH database(s) may not be used.

The insured using another person's production reports/databases is responsible for providing acceptable production evidence for APH reviews. Additionally, bona fide shares must be verified and documented.

**B. Another Person's Production Evidence Requirements**

Another producer's acreage and production evidence may not be used unless all of the following are met:

(1) the insured, using another person's production evidence, and the other person both have a bona fide share (rented for a percentage of the crop) in the insured crop for the current crop year;

**B. Another Person's Production Evidence Requirements (Continued)**

(2) the production evidence is acceptable and account for all of the other person's acreage and production of the crop in the county;

(3) continuity and all other APH requirements are met; and

(4) acceptable production evidence is obtained. An insured that uses another person's records must keep those records for three crop years after the end of the crop year that the insured initially certifies the acreage and production (record retention period).

If selected for an APH review during the record retention period the insured must provide acceptable production evidence for all years certified if requested. Additionally, bona fide shares must be verified and documented.

**C. Landlord and Tenant APH Yields**

When determining APH yields for landlords and tenants (when share renting the same land), each party must file production reports unless one party authorizes the other party to file production reports on his or her behalf.

(1) Parties sharing in the crop may use production reports submitted by other insureds sharing in the crop, provided their use has been authorized by power of attorney or other form of written authorization by the PRD and all APH requirements are met.

(2) If a written authorization statement is used, it must include the certification statement required on the APH form.

(3) Each APH database is updated with the production reports filed by the designated party each crop year. However, this does not relieve the party on whose behalf the production report is being filed of any responsibility to file accurate production reports or maintain acceptable production evidence.

## 1510 Use of APH When Insureds Change or Land is Transferred to Another Person

**A. Insured Person**

Insured Person is the person insured as defined in the BP. Some states require persons that are doing business under an assumed name (e.g., doing business as...) to register that name in the county in which they do business.

**B. APH Yield Determinations for New Persons**

For the purpose of this paragraph, a "new person" includes persons who have changed their names, dissolved business entities, and/or formed new business entities. If a person changed his or her name or created a new person that insures a crop(s) for the current year that was produced on land farmed by the previous person and that land is contained in the new person's farming operation, the crop(s)' acreage and production must be reported for APH purposes.

Assigned yields break continuity and SA T-Yields do not transfer unless the "new person" is a change in name only (meaning members of the Person have not changed). If the insured is not eligible to have the APH data transferred (different land or different crops involved) follow the procedures below.

(1) New persons who have produced the insured crop in the county for more than two APH crop years do not qualify as new producers. If any member of a new person has produced the crop as an individual or member of another person, the new person is considered to have produced the crop.

Members of a person include: stockholders of a corporation, partners of a partnership, or members of a joint venture, etc. See Part 17 Section 5 for new producer requirements and procedures.

(2) When new persons insure crops they previously produced, production reports must be filed for all land contained in their current farming operations according to all applicable APH procedures for each crop year certified.

For persons consisting of more than one member, their production reports must include all land contained in the current farming operations upon which crop(s) insured for the current crop year were produced by all members of the entity.

(a) Acceptable records must be available to support the acres and production certified.

(b) Acres and production history must not be transferred from existing unit databases, unless the new person is eligible to use the acreage and production history and the same acreage is involved. If only part of the land (specific legal descriptions) will be transferred to the new person, the acreage and production must be certified according to the new unit/farming operation.

**Example:** A member of the new person previously produced the insured crop as a member of another person on four different units/sections (Sections 11, 25, 27, and 35). Section 35 was transferred to the new person and the new person will produce the insured crop on this section. The acreage and production history from only Sec. 35 must be certified by the new person and transferred to the new person.

**B. APH Yield Determinations for New Persons (Continued)**

(3) For new persons who have produced insured crop(s) on entirely different land than is contained in the current farming operation, 65 percent of the T-Yield will apply unless the new person provides production reports for those years.

In such cases, those years of production will be used in determining the applicable percentage of the variable T-Yield. See Part 17 for procedure to determine if the new person qualifies as a new producer.

(4) Added land and new crop/P/T procedures will apply after the APH for a new person is structured according to the preceding procedures. However, new persons may also file production reports based on acreage and production records from another person with whom they have a bona fide share in the insured crop who is not a member of the insured person.

**C. Land is Transferred to Another Person Who is Not a New Person**

If land with acreage and production history is transferred from a person (transferor) to a different person that insures the same crop on a different policy (transferee), the acreage and production history must be transferred to and/or certified by the transferee for the current crop year if:

(1) the transferee shared in the insured crop's production with the transferor as a tenant, landlord, member of a partnership, member or owner of a corporation, spouse, co-owner, etc., in previous crop years;

(2) the transferor is a member of the entity to which the land was transferred; or

(3) the acreage was transferred on or before the PRD for the current crop year. For acreage transferred after the PRD, the acreage and production history must be transferred/certified by the transferee by the PRD for the following crop year.

An incomplete or unacceptable production report for the crop year results when the transferee fails to report acreage and production for the applicable crop year. For carryover insureds, assigned yield provisions apply; however, the acreage and production from the acreage transferred must be used the succeeding crop year.

For new insureds, continuity of production reports is broken. Members of an entity include owners and stockholders of a corporation, partners of a partnership, persons insured as co-owners or joint ventures, etc.

Acreage and production history for previous crop year(s) must not be transferred/used by another person who did not share in the insured crop's production unless the transferor is a member of the entity to which the land was transferred or the transferee and transferor share in the insured crop's production for the current crop year.

## 1511 APH Database Instructions

AIPs must include the following information in an APH database. See Exh. 15 for examples of completed APH databases.

| ELEMENT | REQUIRED INFORMATION |
|---|---|
| **Insured's Name and Address** | Insured's name or insurable person, address, phone number, SSN, EIN or RAN. |
| **Required Field Review** | If a field review is required, the "Field Review" box must be checked. |
| **Required Inspection** | The "Inspection" box must be checked when the agent has specifically identified acreage on which a crop inspection is required. These inspections will be performed only by individuals delegated the authority by RO/AIP. |
| **State, County Policy No.** | State, county and policy number to which the APH database pertains. |
| **Crop/Practice/Type /TMA Unit No.** | Crop name, P/T/TMA/Other Characteristics (if applicable) and unit number for the unit. |
| **Yield Indicator** | Indicate any yield indicators that may apply to the APH database. |
| **Legal Description** | Enter the section, township and range, or other descriptions for land if rectangular survey is not applicable.<br><br>If additional space is needed, attach a supplemental sheet. |
| **FSA Farm/Tract/Field Number** | FSA Farm/Tract/Field number is optional, unless units are based on FSA FNs.<br><br>When units are based on Farm Numbers, the Farm Number is required. |
| **Others Sharing in the Crop** | Enter the names of others sharing in the crop (this is not used to report SBIs or the landlord or tenant for a landlord/tenant policy). If none, enter "NONE". |
| **Other** | For perennial crops, enter the year or weighted average year (W) the insurable trees or vines in the unit, were planted/set out, grafted, or dehorned in the orchard, vineyard, grove or bog;<br><br>For green peas, enter the contract price;<br><br>For Sugarcane and Sugar Beets, enter the percent of sugar;<br><br>For potatoes insured under the Northern Potato Quality Endorsement, enter the Northern Potato option percentages (for the most recent year in the base period);<br><br>For new producers of the crop, enter the crop years the insured has produced the crop (e.g., 2013 and 2014). See individual crop examples for completed samples. If not applicable, leave blank; and<br><br>For skip-row corn insurable in certain counties in Colorado, Kansas and Nebraska by a SP, enter the skip-row planting pattern and row width code. |

| ELEMENT | REQUIRED INFORMATION |
|---|---|
| **T-Yield** | The applicable 100 percent T-Yield. |
| **Crop Year** | Enter the appropriate year for each annual yield for yields contained in the base period. |
| **Total Production** | Enter total production as adjusted for production reporting purposes in accordance with Para. 1310 when actual yields are reported.<br><br>Multi-Purpose Production and Yield Worksheets are needed to determine total production for certain crops. Sample production worksheets have been provided for Sugar Beets, Dry Beans, Northern Potato Quality Endorsements and Skip-Row Cotton. See Part 17 and Exh. 17. |
| **Acres** | Enter planted insurable acreage in acres to tenths for each year an actual yield is available in total production column. For annual crops, enter '0.0" if the crop was not planted for any year. |
| **Yield Descriptor** | Enter the appropriate yield descriptor for each yield entered in the APH database. See Exh. 15 for yield descriptors. |
| **Yields** | Enter the appropriate yield see Part 17 and 18. |
| **Total** | Enter the total of all entries in yield column. |
| **Average Yield** | Calculate by totaling the yearly actual yields, assigned yields, and adjusted or unadjusted transitional yields, and dividing the total by the number of yields contained in the database. Crop years when acreage is not planted, is short-rated, or meets the criteria for exclusion due to damage to UUF or a third party are not included in the calculation of the average yield. |
| **Preliminary Yield** | When authorized for crops listed in Part 19, (if weighted average APH yield not required), divide the Total by the number of APH crop years. Apply any applicable yield limitations adjustments and/or reductions and enter the result as the preliminary yield. |
| **Prior Yield** | Enter the prior approved APH yield, if applicable. If it is not applicable, enter N/A. |
| **Approved APH Yield** | Enter the approved APH yield after all entries are verified and any applicable adjustments/reductions are made.<br><br>For potatoes insured under the Northern Potato Quality Endorsement or the Northern Potato Processing Quality Endorsement, enter the appropriate percent for #1 and #2 or better potatoes for both fresh and processing potatoes when applicable. |
| **Rate Yield** | Enter the Rate Yield. |
| **Adjusted Yield** | Enter the Adjusted Yield when applicable. |
| **Insured's Printed Name, Signature and Date** | Required if insured elects YE opt-out. Insured is only required to sign the APH database when YE is elected and the insured has chosen to opt-out of excluding an actual yield(s) in eligible crop year(s). |
| **Comments** | May be used to indicate the basis for establishing the approved APH yield. |

## 1512 Impact of Combining and Dividing

When APH databases are established and continuity of insurance participation is not broken, the prior yield history must be considered if unit structure is changed see Part 10 for directions and examples of unit structure. Prior year(s)' production history from a unit cannot be duplicated across multiple units when an insured changes unit structure.

**Example**: Insured C reported acreage and production under an EU structure in years prior to 2018. If insured C elects an OU structure for 2019, the insured must follow procedure in Part 10 Section 7 to divide the EU into OUs. The prior production history of the EU cannot be duplicated across all OU APH databases.

## 1513-1520 (Reserved)

## Section 2 APH Databases and Yield Determinations Combined and Divided

### 1521 General Rules for Combining and Dividing APH Databases

This section addresses combining or dividing APH databases applicable to crop/P/T/TMA/Other Characteristics when the actuarial documents change.

(1) This procedure applies to both Category B and C crops when P/T/TMAs requiring separate approved APH yields change (are combined or divided) for the current crop year.

(2) This procedure must be applied for each P/T/TMA by unit.

(3) Insureds must file production reports according to the P/T/TMA listed on the actuarial documents for the current crop year.

(4) The initial year the P/T/TMA are combined or divided:

(a) cups do not apply;

**Exception:** When the production history contained within an APH database is not changed when the P/T/TMA is combined or divided (i.e., APH database is not combined or divided, only the P/T/TMA identification is changed), cups will apply.

For example, the practice NI wheat is divided into SF and CC practices. If the insured has only grown CC wheat in the past on the APH database and there is no required division of prior production history, cups will apply to the resulting CC wheat APH database the initial year the NI practice is divided.

(b) any existing SA T-Yields still needed to complete the APH databases for Category B Crops are recalculated based upon the resulting P/T/TMAs, see Para. 1774. SA T-Yields do not apply to Category C Crops.

(c) if both types and practices change for the crop the same crop year, types should be combined/divided prior to combining/dividing practices. For example, Spring Wheat is divided into Spring Wheat and Durum Wheat types and the NI practice is divided into SF practice and CC practice. The spring wheat should be divided first into spring and durum types and then the resulting APH databases divided according to the CC/SF practice.

(5) For the purposes of reporting or re-designating grade quality percentages which are utilized by a crop's quality endorsement, (e.g., apples), references to "production" shall be applicable since these percentages are determined from measured production at a specific grade compared to the corresponding total production.

## 1522 Combining APH Databases

Combining APH databases when more than one P/T/TMA requiring separate approved APH yields has been combined into a P/T (e.g., CC and SF practices are combined into a NI practice) or TMA requiring a separate approved APH yield/APH database, use the following instructions. See Part 10 for combining or dividing APH database(s) exceptions/restrictions.

(1) If a single APH database (one P/T/TMA reported) contains actual or assigned yield(s), use the following procedure, see Exh. 15.

**Step 1:** Complete the most recent year (2018 for most crops) in the APH database by using the current production report(s) filed for the most recent APH crop year. For carryover insureds, if acceptable production report(s) are not filed for the previous (policy) year and insurable acreage was planted, use the assigned yield. Zero-planted acres are used to indicate that continuity of records is maintained.

**Step 2:** Retain all actual and assigned yields and acres.

**Step 3:** Remove T-Yields in the database and if less than four years of actual and/or assigned yields, enter the applicable variable T-Yield (by P/T/TMA) to establish an APH database with a minimum of four years. If a T-Yield is not established, a RO Determined Yield will be necessary.

**Step 4:** Calculate the approved APH yield using the applicable Category B or C procedure.

(2) If more than one APH database (more than one P/T/TMA was reported which has been combined into a single APH database) contains actual and/or assigned yields, use this procedure, see Exh. 15.

**Step 1:** Complete the most recent crop year (2018 for most crops) in the APH database by using the current production reports filed for the previous (policy) year. If separate production reports are filed according to the previous (policy) year's requirements (more than one P/T/TMA), combine the acres and production from the separate production reports.

If separate production reports are filed according to the previous (policy) year's requirements (more than one P/T/TMA):

(a) Combine the acres and production into the applicable P/T/TMA. See instructions for Para. 1522(1);

(b) If zero acres were planted, enter "Z" in the yield column when sufficient space exists in the database.

For carryover insureds, if acceptable production report(s) are not filed for the previous (policy) year and insurable acreage was planted, use the assigned yield. If insurable acreage was planted on more than one P/T/TMA, use a simple average of the prior approved APH yields for the applicable P/T/TMAs times .75.

**Step 2:** Combine the total production and actual acres for each APH crop year (for the yields that are being combined). For APH crop years with assigned yields, multiply the planted acres times the assigned yield to establish a production amount and handle in the same manner as a year with actual yields.

Divide the combined production by the combined acres for corresponding crop years.

Next, enter the combined total production, acres and average yields in the current crop year's database.

For crop years in which no acres have been planted, enter "Z" in the yield column if sufficient space exists in the database. Zero-planted acres are used to indicate that continuity of records is maintained for the P/T/TMAs being combined.

**Step 3:** If less than four years of actual and assigned yields for the crop, enter the applicable variable T-Yield (by P/T/TMA) in the yield column to establish an APH database with a minimum of four years.

If SA T-Yields were applicable in the prior year and there are less than four years of actual and assigned yields for the APH database, recalculate the SA T-Yields.

Use the simple average of approved APH yields for all APH databases by P/T/TMA and enter the recalculated SA T-Yield in the yield column to establish an APH database with a minimum of four years see Part 17 Section 10.

**Step 4:** Calculate the approved APH yield using the applicable Category B or C current procedure.

## 1523 Dividing APH Databases

When a P/T/TMA is divided into more than one P/T/TMA the insured must establish production and acreage history according to the new structure in the actuarial documents to the following procedure.

An existing APH database established for one P/T/TMA may not be duplicated to establish an APH database for a different P/T/TMA.

**Exception:** In those instances where a fall and winter or spring practices are divided into additional practices due to the establishment of multiple planting periods (e.g., potatoes in Riverside, CA) APH databases may be separated by duplicating prior years' history for each P/T in this situation only. Yield descriptors DA, DV and DG will be used to identify such duplicated actual production history. Production and acres for each P/T must be reported and maintained separate in subsequent years.

(1) For the most recent APH crop year, acceptable production report(s) must be filed according to new P/T/TMAs for the current crop year. If not:

(a) for carryover insureds, assigned yields will apply to APH databases with planted insurable acreage for the most recent APH crop year. For APH databases with no planted insurable acres, enter zero acres and a "Z" in the yield column (if sufficient space in the APH database) to indicate that continuity of records is maintained.

(b) for new insureds, follow standard APH database procedures (actual records, variable T-Yields, etc.) for establishing separate APH databases according to P/T/TMAs applicable for the current crop year, refer to Part 17 Section 13.

(2) The insured must separate all prior production and acreage history by APH database according to the new structure in the actuarial documents using one of the following methods (i) thru (iii) below in the order listed see Example below.

(a) Only one of the three methods below may be elected within a crop year for the crop/county and the selected method applies across all units by P/T/TMA for that crop year.

(i) Actual record certification/re-certification of separate production from known acres by P/T/TMA for the new structure in the actuarial documents see (3) below. When types or varieties are separated and the production was not commingled but was reported together according to the previous structure in the actuarial documents, the acreage and production must be recertified separately.

**Example:** Production is not commingled between grape varieties and the previous actuarial indicated several varieties of grapes insured under one group; for the current year one variety was removed from the group and made insurable as a separate type.

(ii) Apportion commingled production by P/T/TMA if different T-Yields have been established for the new structure in the actuarial documents using acreage records provided by the insured.

Use the Multi-Purpose Production and Yield Worksheet. See (4) below, Para. 1715 and Exh. 17. If the T-Yields are the same, prorate the production to planted acres of the applicable P/T according to Para. 1715C.

(iii) Attribute the acres and production to the P/T/TMAs for the new structure in the actuarial document that normally has the highest yield (i.e., the highest T-Yield or, if the T-Yields are the same, the highest yielding P/T designated by RMA), see Para. 1523(5) and 1715D.

(b) Exceptions:

(i) If the production history contained within the APH database(s) does not change as a result of the new P/T code change as indicated on the actuarial documents, or the insured already has APH databases established according to the new P/Ts, no action is necessary to divide the APH databases. Apply the new P/T code to the APH database(s). Cups, when elected, are applicable to these APH databases.

(ii) On any unit for any year, if only one P/T/TMA was planted on the unit, that unit's actual acres and production may be re-certified without regard to instructions for apportioning or attributing the acreage and production for other units for that year. Hard copy records of production previously reported will not be required for years outside the record retention period.

**Example:** In 2018, the insured had two units planted. On one unit both SF and CC practices were planted; on the second unit only CC acreage was planted and the insured may re-certify the CC acreage as actually planted (SF acreage will be re-certified as zero planted).

(c) Production report records are separated one year at a time from the most current year to the least current year. If method (a)(i) is selected, the insured must re-certify year by year until records are not available and then move to method (a)(ii), then to method (a)(iii). Once an insured elects (a)(ii) or (a)(iii), he/she cannot go back to the prior method.

**Exception:** Loss records must be used.

**Example:** Crop years 2018 to 2010 are being separated for the 2019 crop year. The insured certifies actual production and acreage records, by P/T/TMA for the 2018 crop year for the new structure in the actuarial documents. The insured uses actual production and acreage records to re-certify the 2017, 2016 and 2015 actual yields by the P/T/TMA for the new structure in the actuarial documents. Acceptable records are not available to re-certify other prior years.

The insured provides acreage records to apportion 2014 production 2013 and prior years may not be separated based on re-certified production and acres. Prior years may only be separated by apportioning or attributing, see (b) Exception above.

If the insured cannot apportion the 2013 crop year because separate acreage records are not available, 2013 must be attributed. The insured must then attribute 2012 and prior years' acres and production to the highest-ranking P/T/TMA. Attributing is mandatory for 2012 and prior crop years, see (b) Exception above.

(3) If production is certified/re-certified to the P/T/TMAs, follow standard APH database procedures:

**Step 1:** Acceptable production report(s) must have been filed according to P/T/TMAs for the current crop year, refer to Part 17 Section 3. If acceptable production reports are not filed for carryover insureds, enter the assigned yield.

**Step 2:** Enter the certified/re-certified production, acres, actual yields, and assigned yields (for carryover insureds) into the APH database.

**Step 3:** If less than four years of acceptable records are available and other production history is not available that could be apportioned or attributed, enter the applicable variable T-Yield to establish an APH database with a minimum of four years.

If SA T-Yields were applicable in the prior year and there are less than four years of actual and assigned yields for the APH database, recalculate the SA T-Yields using the simple average of approved APH yields for all APH databases by P/T/TMA and enter the recalculated SA T-Yield in the yield column to establish an APH database with a minimum of four years, see Para. 1774.

**Step 4:** Calculate the approved APH yield according to applicable Category B or C procedure.

(4) If production is apportioned to P/T/TMAs, the Multi-Purpose Production and Yield Worksheet must be used. If the T-Yields are the same, prorate the production to planted acres of the applicable P/T according to Para. 1715C. If SA T-Yields were applicable in the prior year and there are less than four years of actual and assigned yields for the APH database, recalculate the SA T-Yields using the simple average of approved APH yields for all APH databases by P/T/TMA and enter the recalculated SA T-Yield in the yield column to establish an APH database with a minimum of four years. See Para. 1774 and Exh. 17.

**Step 1:** Acceptable production report(s) must have been filed according to P/T/TMAs for the current crop year, refer to Part 17 Section 3. If acceptable production reports are not filed for carryover insureds, enter the assigned yield.

**Step 2:** Enter the acres, apportioned production and yields, and assigned yields (for carryover insureds) in the APH database.

**Step 3:** If less than four years of acceptable records are available and other production history is not available that could be attributed, enter the applicable variable T-Yield to establish an APH database with a minimum of four years. If a T-Yield has not been established, a RO Determined Yield is necessary. See Part 17 Section 6 and Part 20 for RO Determined Yield Request.

**Step 4:** Calculate the approved APH yield according to applicable Category B or C procedure.

(5) If production is not certified/re-certified or apportioned to the P/T/TMAs, the acreage and production is attributed to the P/T/TMA that has the highest T-Yield (e.g., when the NI practice divided into SF and CC, attribute the production to the SF APH database) or, if the T-Yields are the same, to the highest yielding P/T designated by RMA, see Exh. 15.

(a) For the P/T/TMA with the highest T-Yield:

**Step 1:** Acceptable production report(s) must have been filed according to P/T/TMAs for the current crop year, refer to Part 17 Section 3. If acceptable production reports are not filed for carryover insureds, enter the assigned yield.

**Step 2:** Enter the production, acres, actual yields, and assigned yields (for carryover insureds) in the APH database.

**Step 3:** If less than four years of acceptable records are available, enter the applicable variable T-Yield (by P/T/TMA) to establish the new four year APH database. If SA T-Yields were applicable in the prior year and there are less than four years of actual and assigned yields for the APH database, recalculate the SA T-Yield using the simple average of approved APH yields for all APH databases by P/T/TMA, see Para. 1774 and enter the recalculated SA T-Yield in the yield column to establish an APH database with a minimum of four years.

(b) For the P/T/TMAs with lower T-Yields:

**Step 1:** Acceptable production report(s) must have been filed according to P/T/TMAs for the current crop year, refer to Part 17 Section 3. If acceptable production reports are not filed for carryover insureds, enter the assigned yield.

**Step 2:** Divide the lower T-Yield published for each applicable P/T/TMA by the highest P/T/TMA T-Yield published to determine a percentage factor. For example, CC T-Yield of 32 (lower) divided by the SF T-Yield of 40 (highest): 32/40 = 0.80 (rounded to two places) or 80 percent.

**Step 3:** Apply the percentage factor (by P/T/TMA) determined in Step 2 to the approved APH yield for the highest T-Yield P/T/TMA to calculate a Determined Yield for the lower T-Yield P/T/TMAs.

**Example:** SF approved APH yield of 29 x 0.80 = 23. The Determined Yield will not exceed the lower T-Yield for each applicable P/T/TMA for any year acreage and production is attributed. The Determined Yield will be identified with a "F" Yield descriptor.

**Step 4:** Calculate the approved APH yield following the applicable Category B or C procedure.

## 1524 No Actual or Assigned Yields

If there are no actual or assigned yields in the APH databases being combined or divided:

**Step 1:** Acceptable production report(s) must have been filed according to P/T/TMAs for the current crop year. For carryover insureds, if acceptable production report(s) are not filed for the current crop year and insurable acreage was planted for the previous policy year, enter the assigned yield. For zero-planted, enter "Z" in the yield column if sufficient space exists in the APH database. Zero-planted acres are used to indicate that continuity of records is maintained. For new insureds, standard APH database procedures (actual records, variable T-Yields, new producer, etc.) apply according to the applicable P/T/TMA for the current crop year.

**Step 2:** Complete the APH database with a minimum of four years the current variable T-Yield (by P/T/TMA). If no T-Yield has been established, a RO Determined Yield will be necessary. See Part 17 Section 6 and Part 22 for RO Determined Yield Request.

**Step 3:** Calculate the approved APH yield using applicable Category B or C procedure.

## 1525-1540 (Reserved)

## Section 3 APH Yield Adjustment

### 1541 Yield Adjustment General Information

For APH yield calculation purposes, insureds may elect to substitute 60 percent of the applicable T-Yield for actual yields (does not apply to assigned and temporary yields) that are less than 60 percent of the applicable T-Yield to mitigate the effect of catastrophic year(s). Insureds may elect the APH YA and substitute 60 percent of the applicable T-Yield for low actual yields caused by drought, flood, or other natural disasters.

BFRs who elect APH YA will substitute 80 percent of the applicable T-Yield instead of 60 percent of the applicable T-Yield. All other requirements for YA remain unchanged, including the requirement that the actual yield being replaced must be less than 60 percent of the applicable T-Yield to qualify for YA. When a person no longer qualifies as a BFR in subsequent crop years, the YA elected by the insured will use a replacement yield of 60 percent of the applicable T-Yield which is the same replacement yield used by all non-BFRs.

**Example:** The insured is a BFR and qualifies to use his/her father's actual yields on transferred acreage and has elected YA for all eligible actual yields. In this example:

- the 2010-2016 county T-Yield are 97 bushels (97*.8=YA 78),
- the 2017-2018 county T-Yields are 110 (110*.8=YA 88).

### 1542 Election of APH Yield Adjustment

(1) The election must be made no later than the applicable PRD for the crop.

(2) The election is made on crop/county basis and are applied on an APH database actual yield basis by year.

(3) The election is continuous and will remain in place unless cancelled.

(a) Substituted yields elected in prior crop years will continue to apply unless the insured notifies the AIP by the PRD.

(b) See Para. 1545 for instructions on selecting the method to calculate approved APH yields.

(4) Elections are applicable to Category B and Category C APH crops, unless otherwise limited by procedures in this section or Parts 17, 18, and 19.

### 1543 Cancelling APH Yield Adjustments

The insured may cancel the YA election either for all years or for any individual year(s) within APH databases.

(1) Cancellations must be made no later than the crop's PRD for the current crop year.

(2) If YA elections or individual yearly yield substitutions are cancelled, actual yields will be used to calculate APH yields.

(a) Cups are applicable when elected and the insured did not opt out of having a cup apply, when yield substitution(s) were applicable the previous APH crop year. See Part 15 Section 5.

(b) Yield floors are applicable, for Category B APH crops only, based on a percentage of the applicable T-Yield for the P/T/TMA using the number of years of actual/assigned yields provided for the crop and county.

(3) If the policy is transferred to another AIP (or cancelled and rewritten) the APH yield adjustment election is cancelled.

## 1544 T-Yields Used for YA

### A. T-Yields

T-Yields used for YA are those contained on the actuarial documents or, if applicable, other T-Yields calculated under APH procedures such as:

(a) SA T-Yields for added land or new crop/P/T;
(b) Determined irrigated T-Yields;
(c) T-Yields assigned by ROs; and
(d) Perennial Crop T-Yields or weighted average T-Yields.

AIPs must identify and maintain such other T-Yields as long as they are needed for yield adjustment purposes. When a policy is transferred to another AIP, this information must be provided as part of the APH record. When these T-Yields are replaced by four actual/assigned yields, yield substitutions will be calculated from the T-Yield as provided by the applicable actuarial documents.

### B. Applicable Crop Year T-Yields for Category B and C Crops

(1) Yield substitutions for new and carryover insureds are based on the T-Yield in place, corresponding to the crop years contained in APH databases, as follows:

(a) substitute yields for the 2001 and prior APH crop years will be based on the 2001 crop year T-Yields.

**B. Applicable Crop Year T-Yields for Category B and C Crops (continued)**

**Example:** When actual yields are reported for the 1995-2001 APH crop years, 60 percent of the 2001 T-Yield will be used to determine substitute yields for the 1995-2001 APH crop years, unless the insured is eligible for BFR benefits. If the insured is eligible for BFR benefits, 80 percent of the 2001 T-Yield will be used to determine substitute yields for the 1995-2001 APH crop years.

(b) substitute yields for the 2002 and subsequent APH crop years will be based on the 2002 and respective subsequent crop year T-Yields.

**Example:** Yield substitutions for the:

2009 APH crop year will be 60% of the 2009 T-Yield;
2017 APH crop year will be 60% of the 2017 T-Yield; and
2018 APH crop year will be 60% of the 2018 T-Yield.

If the insured is eligible for BFR benefits, yield substitutions for the:

2009 APH crop year will be 80% of the 2009 T-Yield;
2017 APH crop year will be 80% of the 2017 T-Yield; and
2018 APH crop year will be 80% of the 2018 T-Yield.

(2) When coverage is initially established for a new P/T on the actuarial document, 60 percent of the T-Yield for the new P/T will be used to determine substitute yields for that APH crop year and for prior APH crop years (e.g., a new practice was established for 2019 therefore, 60 percent of the 2019 T-Yield is used for 2019 and prior APH crop year yield substitutions). Substitute yields for subsequent APH crop years will then be 60 percent of respective subsequent crop year T-Yield.

**Exception:** If the insured is eligible for BFR benefits, 80 percent of the T-Yield for the new P/T will be used to determine substitute yields.

(3) For Category C APH Crops, when T-Yields or Weighted Average T-Yields are based on Age/Density/Early/Mid/Late the following applies for YA:

(a) if T-Yields are applicable, use the applicable T-Yield for the Age/Density/Early/Mid/Late of the crop for the applicable crop year being substituted. See Part 18 Section 3 for Age/Leaf Year determinations.

(b) if weighted average T-yields are applicable, the weighted average T-yield is used.

**B. Applicable Crop Year T-Yields for Category B and C Crops (continued)**

(4) If a T-Yield is not available for a crop year in which the producer seeks to substitute a yield, contact the RO to obtain an assigned T-Yield for that crop year.

## 1545 Calculating Approved APH Yields When YA is Elected

**A. Category B Crops**

For Category B Crops the first crop year that yield substitution(s) are elected:

(1) make the following calculations for each APH database:

(a) calculate the average adjusted APH yield by substituting 60 percent of the applicable T-Yield for eligible actual yields that are less than 60 percent of the applicable T-Yield (YA) (80 percent for BFR);

(b) calculate the cupped yield, if elected and applicable, see Part 15 Section 5; and

(c) calculate the yield floor; if applicable, see Part 17 Section 4.

(2) insureds may choose by the PRD the actual yields (crop year) within an APH database to be substituted and the method, by unit/P/T/TMA and, to determine the approved APH yield:

(a) for CAT coverage, the average adjusted APH yield as calculated under APH procedure.

(b) for additional coverage, the average adjusted APH yield or the higher of the yield floor or cupped yield, if elected and applicable, calculated under APH procedure.

(3) approved APH yields calculated when yield substitutions are used, are not eligible for yield floors.

(4) If MYs are applicable, apply yield substitutions after the individual APH data has been summarized on the MY summary. Separate MYs are required for TMA, designated homogeneous MY areas, and by P/T, see Part 17 Section 7 and Exh.17 for APH MY summary instructions and requirements.

(a) AIPs must submit one MY summary record for each MY to RMA. The MY summary record must contain the summarized data prior to APH adjustments. RMA will validate MY summary records for which yield substitutions are applicable.

(b) Yield substitutions, approved APH yields, and rates will be determined at the MY level.

**A. Category B Crops (continued)**

(5) For a SF practice using the special instructions in Part 11 Section 2, make yield substitutions (if applicable) to both the SF and the (CC) practices using 60 percent (80 percent for BFR) of the respective practice's applicable T-Yield prior to determining the "higher" yield to be used for the SF practice.

**B. Substitutable Yields with a Combination of Insured and Uninsured Causes of Loss**

Low actual yields caused by a combination of insured causes of loss and uninsured causes of loss may only be substituted if the weighted yield per acre on a weighted basis, including any uninsured cause of loss appraisal, is below 60 percent of the applicable T-Yield.

**Example:** The APH database consists of 100.0 acres (the applicable T-Yield is 100 bu. per acre). The insured harvested 3,000 bu. and an uninsured cause of loss of 20 bu. per acre was assessed on the entire acreage for failure to follow good farming practices. 3,000 + 2,000 (20 bu. X 100.0 acres) = 5,000 /100.0 = 50 bu. per acre. The actual yield reported for APH is 30 bu. per acre, but the acreage still qualifies for yield substitution because the per acre yield (including the uninsured cause appraisal) was below 60 percent of the applicable T-Yield (60 bu.).

**Example:** The APH database consists of 110.0 acres (the applicable T-Yield is 50 bu. per acre). A fire started by the insured's combine destroyed 35.0 acres of a 55.0 acre field. The AIP assessed 48 bushels per acre uninsured cause of loss on the acreage destroyed by fire. The insured harvested 800 bushels from the remaining 20.0 acres of the field. A hail storm damaged 55 acres of the same unit in another field which was released to be put to another use with a 10 bushel appraisal. 1,680 (35.0 acres X 48 bu.) + 800 (20.0 acres X 40 bu.) + 550 (55.0 acres X 10 bu.) = 3030 /110 = 28.0 bu. per acre. The actual yield reported for APH is 12.0 bu. per acre (800 + 550/110), but the acreage still qualifies for yield substitution because the per acre yield (including the uninsured cause appraisal) was below 60 percent of the applicable T-Yield (30 bu.).

**C. Category C Crops**

(1) Sixty percent of the applicable T-Yield will be substituted for actual yields that are less than 60 percent of the applicable T-Yield (80 percent for BFR) due to drought, flood, or other natural disasters.

Some Category C T-Yields are established for specified ages, variety, densities, etc. As the crop's age changes, different T-Yields apply; therefore, substitute yields must be based on 60 percent of the variable T-Yield (80 percent for BFR) for the age for individual crop year being substituted, as indicated in Para. 1544B.

**C. Category C Crops (continued)**

Weighted average T-Yields are the applicable T-Yields for YA purposes. They are not "set" and may change from year to year. A weighted average T-Yield, see Weighted Average Age/Density/Early/Mid/Late Worksheet, Exh. 18 Examples, for the current crop year must be calculated for each APH database. YA is 60 percent of the T-yield (80 percent for BFR) provided in the actuarial documents for the weighted average Age/Density/Early/Mid/Late for each individual crop year(s) within an APH database as indicated in Para. 1544B.

(a) The first crop year YA(s) are elected or if all applicable YA(s) cancelled for at least one APH crop year for each APH database:

(i) calculate the average adjusted APH yield (after YAs are made);

(ii) calculate the cupped yield if applicable;

(iii) calculate the weighted average APH yield using Weighted Average Age/Density/Early/Mid/Late Worksheets, if applicable;

(iv) by the PRD, the insured must choose the method used to determine the approved APH yield, by selecting the:

(A) cupped yield, if elected;

(B) average adjusted APH yield by substituting 60 percent of the applicable T-yield for eligible actual yields (80 percent for BFR); or

(C) approved APH yield without YA or cup; and

(b) APH databases that do not contain YAs remain eligible for cups, when elected and authorized by procedure.

(2) YA is not applicable to the Category C APH database when:

(a) an approved APH yield cannot be determined by the AIP and a RO Determined Yield is required.

**Exception:** YA may be authorized by the RO when providing the RO Determined Yield.

(b) AIPs are authorized by the CIH to determine the approved APH yield when high variability conditions (alternate bearing/downward trend) are triggered (Part 18 Section 4). High variability (Para. 1861) must be determined prior to determining eligibility for YA.

**C. Category C Crops (continued)**

(c) AIPs are delegated responsibility by RO UG to calculate the approved APH yield in lieu of submitting a RO Determined Yield Request.

**Exception:** YA may be authorized by the RO through the UG.

(d) acreage not meeting the CP insurability minimums when uninsurable and insurable acreage is commingled.

(e) production is commingled by practice, type or other characteristic (e.g. age) and a weighted average T-Yield was not calculated.

(f) any actual yields in the APH database were adjusted.

(g) significant changes have occurred to Trees/Vines/Bushes/Bogs as identified on the PAW and/or PAIR.

**Exception:** Contact the RO concerning appropriate T-Yields for yield substitution purposes.

## 1546 Determining Premium Rates

If the approved APH yield calculation chosen by the insured includes at least one substituted actual yield, an optional coverage rate may apply as provided in the actuarial document.

The rate yield is equal to the average yield when yield substitutions are used in an APH database with the following exceptions:

(1) the approved APH yield is reduced for Inconsistent Approved APH Yields (see Para. 1591 for Inconsistent Approved APH Yield determination procedures). In these situations, the rate yield is equal to the approved APH yield; and

(2) the approved APH yield is reduced for Different Production Methods being carried out for the current crop year which results in lower actual yields (see Para. 1592 for Different Production Method determination procedures). In these situations, the rate yield is equal to the approved APH Yield.

## 1547-1550 (Reserved)

## Section 4 APH Yield Exclusion

### 1551 YE General Information

YE, when elected, allows the exclusion of actual yields for a certain crop year when RMA determines the county per planted acre yield for a crop year was at least 50 percent below the simple average of the per planted acre yield for the crop in the county for the previous 10 consecutive crop years. When a crop year is determined to be eligible for YE for a crop in a county, insureds in contiguous counties will also be eligible to exclude actual yields for that crop year under YE.

The YE option and eligible crop years for exclusion are identified in the actuarial documents. When YE is elected, insureds may exclude actual yields in any eligible crop year(s) that are identified in the actuarial documents.

### 1552 Eligibility for YE

#### A. Election

To be applicable for the current crop year, the insured must elect YE:

(1) By the applicable SCD;

**Note:** For crops with a two-year coverage module, YE must be elected by the SCD of the first crop year of the two-year coverage module.

(2) On a crop/county basis; and

(3) On an Application or Policy Change form by including the "YE" option code.

AIPs are responsible for advising insureds who elect YE that all actual yields in an eligible crop year are automatically excluded unless the insured opts out of excluding an actual yield in an eligible crop by identifying the yield not to be excluded in the APH database.

#### B. Availability

The option must be provided in the actuarial documents for YE to be available for the crop and county. YE is available for both CAT and additional coverage policies. Crop years eligible for exclusion are identified in the actuarial documents.

#### C. Continuous Election

YE is a continuous election that remains in effect unless cancelled.

## 1553 Cancellation

YE must be cancelled in writing on or before the cancellation date for the crop for the effective crop year. (See Para. 1558 to change an actual yield exclusion of an eligible crop year within an APH database.) When an insured cancels YE:

(1) Actual yield exclusions for eligible crop year(s) no longer apply for that crop year;

(2) Yield substitution and cups, when elected, and yield floors, as applicable, may apply.

## 1554 Transfers

When the policy is transferred to a different AIP, YE is considered cancelled, as is any other option, endorsement, WA, etc. If the insured would like to continue the use of YE, the insured must make that election with the assuming AIP on or before the SCD.

## 1555 Applicability of WAs

Generally, WAs are eligible for YE if the actuarial documents for the crop/county identify the YE option and eligible crop years. The following exceptions apply.

(1) When a WA (e.g., TC and TP WA) makes an irrigation practice (either irrigated, non-irrigated, or limited irrigation) insurable, YE is not available because the irrigation practice is not an insurable practice listed on the actuarial documents for the crop/county.

(2) YE is not applicable for XC WA (crop is not insurable in the county).

(3) In accordance with the WAH, a WA cannot be used to add the YE option when the crop/county does not contain the YE option in the actuarial documents.

## 1556 Applicability of Yield Limitations and Yield Reductions

### A. Yield Floors

Approved APH yields using yield exclusion are not eligible for yield floors. APH databases without excluded actual yields remain eligible for yield floors, when authorized by Part 17, Section 4.

### B. Cups

Cups, if elected may apply even when YE is elected.

### C. Yield Reductions

Procedures concerning yield reductions contained in Part 15, Section 6 are unaffected when YE is elected.

Actual yields reduced due to being identified as an excessive yield cannot be excluded under the YE option.

**C. Yield Reductions (continued)**

While actual yields in an eligible crop year may be excluded in APH databases, reductions of approved APH yields due to inconsistent approved APH yields or different production methods continues to apply when Para. 1554 and 1555 applies to an APH database.

## 1557 Actual Yields Eligible for YE

Actual yields in an APH database identified with the following yield descriptors are eligible for exclusion if they are in an eligible crop year for exclusion identified in the actuarial documents see Exh. 15 for list of yield descriptors and their meaning:

A, AY, FA, NA, PA, DA, NW, PW, WY, R, PR, NR, RY, BF, AC,

## 1558 Exclusion of an Actual Yield for an Eligible Crop Year Within an APH Database

When the insured has elected the YE option, an insured may choose, by APH database and by eligible crop year, whether or not to exclude an actual yield for that specific crop year.

(1) Eligible crop years for exclusion are identified in the actuarial documents. There is no limit to the number of actual yields in eligible crop years that can be excluded from an APH database.

(2) When YE is elected, YE applies to all actual yields in eligible crop years eligible for exclusion identified in the actuarial documents for all APH databases unless the insured notifies the AIP in writing by the PRD of any actual yield(s) for an eligible crop year(s) they choose to retain.

**Example:** Although a crop year is eligible for exclusion, the insured's actual yield in an APH database is above average for the crop year and the insured chooses to not exclude the actual yield.

(3) Any actual yield in an eligible crop year the insured chooses to not exclude must be identified in the APH database with a Yield Exclusion Opt Out flag.

(a) Use a "Y" in the Yield Exclusion Opt Out flag of the APH database to indicate the insured is choosing to not exclude an actual yield in an eligible crop year for exclusion (opting out of YE for that actual yield) and that the actual yield will remain in the calculation of the approved APH yield.

(b) See DSSH for the APH database form standards for YE. When an insured has chosen to opt out of YE for an actual yield(s) in an eligible crop year in an APH database, the insured must sign the APH database form.

**Note:** If there are multiple APH databases on the same form, only one signature is required. An insured is not required to sign the APH database form if they do not opt out of exclusion for any actual yields in an eligible crop year.

(4) Actual yields in an eligible crop year that are excluded continue to be reported in an APH database using the applicable yield descriptors identified in Exh. 15.

(5) Any exclusion or opt out of exclusion of an actual yield(s) in eligible crop years in an APH database continues to apply in subsequent crop years unless the insured cancels the YE option by the SCD for the crop or notifies the AIP in writing by the PRD to change which actual yields are excluded or opted out of exclusion. If the insured chooses to no longer exclude an eligible crop year in an APH database by the PRD, the previously excluded actual yield(s) are used to calculate APH yields. However, yield floors are applicable for Category B APH crops only based on a percentage of the applicable T-Yield for the P/T/TMA using the number of years of actual/assigned yields provided for the crop and county.

(6) If the exclusion of actual yields for eligible crop year(s) results in less than four years of yields being used in the APH database, the applicable T-Yield is used to maintain a minimum base period of four yields.

If the variable T-Yield applies to an APH database, the T-Yield used to complete the four-year minimum base period uses the variable T-Yield percentage based on the number of years of actual/assigned yield(s) for the crop in the county. Excluded yield years continue to count as a year of producing the crop for variable T-Yield, percent of yield floor, new producer and BFR purposes.

**Note:** The number of years of actual/assigned yields for the crop in the county must be reported in the actual yield year count field in the PASS P15 record by the AIP to ensure the correct percentage is applied to the variable T-Yield.

**Example:** An APH database consists of 2 SA T-Yields and 2 actual yields (the SA T-Yield is the applicable T-Yield). The insured excludes one of the actual yields in an eligible crop year for exclusion. The APH database is completed with the SA T-Yield that applies to that APH database.

**Example:** An insured only has one APH database for the crop and it consists of three variable T-Yields (E yield descriptor for 80 percent of the county T-Yield) and one actual yield in an eligible crop year for yield exclusion. The insured elects to exclude the actual yield and the APH database is completed with the variable T-Yield (80 percent of the county T-Yield because variable percentage of T-Yield is based on number of years of actual/assigned yields for the crop and excluded eligible crop years continue to count for the purposes of determining variable T-yield percentage).

(7) The most recent crop year will not be identified as eligible for yield exclusion in the actuarial documents since the production data necessary for RMA to determine whether the most recent crop year meets the criteria for exclusion is not available until after the PRD for that crop year.

(8) Any crop year prior to 1995 will not be identified as eligible for yield exclusion.

(9) Actual yields in an eligible crop year that are excluded are still subject to APH reviews.

## 1559 YE Interaction with YA

(1) A producer may elect and apply both YA and YE options on a policy and within an APH database.

(2) Only one option, either YE or YA, can be applied to an actual yield for an eligible crop year within an APH database.

(3) If the insured has elected both YE and YA to apply to all eligible crop years and a crop year qualifies for both elections, YE will apply to an actual yield in an eligible crop year unless the insured chooses to not exclude that yield in the APH database.

(a) If the insured chooses to not apply yield exclusion for an eligible crop year, identify such yield in the APH database in the Yield Exclusion Opt Out, see Para. 1558 (3).

(b) If YA has been elected, yield substitution will apply to the actual yield if it qualifies and the insured chose to opt out of excluding the actual yield.

(c) If the insured chooses to opt out of excluding an actual yield in an eligible crop year and not substitute an actual yield that qualifies for yield adjustment, use the yield descriptor NA and identify such yield in the APH database in the Yield Exclusion Opt Out, see Para. 1558 (3).

## 1560 Impact of YE Specific to Category B Crops

### A. Impact of YE on MY

If MYs are applicable, apply yield exclusions to eligible crop years after the annual yields from APH databases have been summarized on the MY summary. See Part 17, Section 7 and Exh.17 for APH MY summary requirements. Yield exclusions, adjusted yields, average yields, approved APH yields, and rate yields are determined in the MY Summary.

### B. Impact of YE on SF Practice

For a SF practice using the special procedures in Para. 1122, make yield exclusions, if applicable, to both the SF and the CC practices prior to determining the "higher" approved APH yield to be used for the SF practice in accordance with Para. 1122 B.

### C. Impact of YE on SA T-Yields

While added land and new crop/P/T procedures (Part 17, Sections 9 and 10) are not affected by the election of YE, the calculation for SA T-Yields is changed when an actual yield in an eligible crop year is excluded.

SA T-Yields will continue to be determined based on the crop year the APH database is established, by crop/P/T/TMA. However, instead of using the approved APH yield from each of the insured's existing APH databases for the policy that have at least one year of actual/assigned yields, by crop/P/T/TMA to calculate the SA T-Yield, use:

(1) the adjusted yield, see Para. 1563 below for those APH databases with excluded actual yields in an eligible crop year that have at least one actual/assigned yield prior to any exclusions; and

(2) the approved APH yield for those APH databases where actual yields have not been excluded that have at least one actual/assigned yield.

All other calculations and requirements for use of the SA T-Yield remain unchanged.

### D. Impact of YE on North Dakota PTY

The PTY is a T-Yield calculated using the insured's own actual yields and, if applicable, assigned yields. For insureds who elect YE, the PTY is used in place of RMA's published T-Yields contained in the actuarial documents or other calculated T-Yields authorized by the CIH, such as SA T-Yields for added land. As such, the total production and acres for all actual/assigned yields for an applicable P/T/TMA for an insured must be used to compute the insured's PTY, similar to how a county T-Yield is based on an average yield from all production in the county for that crop/P/T. Therefore, when an actual yield in an eligible crop year is excluded in an APH database, that actual yield is not excluded for the purposes of calculating the PTY.

**D. Impact of YE on North Dakota PTY (Continued)**

When completing the PTY Summary, include the production and acreage associated with an actual yield that has been excluded in an APH database in the total production and acres for all actual/assigned yields for an applicable P/T/V/TMA used to complete the PTY Summary in accordance with the procedures in Informational Memorandum PM-06-028.

**E. Impact of YE on TA**

When an actual yield in an eligible crop year is excluded, an excluded actual yield is not considered for TA purposes when determining:

(1) whether an APH database qualifies for TA by having at least an actual yield in one of the four most recent crop years, see FCIC-20220, Trend-Adjusted Actual Production History Standards Handbook Para. 11;

(2) the applicable TA percentages, see FCIC-20220, Para. 21B; and

(3) the highest actual yield in the APH database with one year of trend adjustment applied for the TA limitation of the approved APH yield for the APH database (see FCIC-20220, Para. 21H).

## 1561 Impact of YE for Perennial Crops (Category C/Pecan Revenue)

(1) When an actual yield in an eligible crop year is excluded, the excluded actual yield is considered when determining whether the crop meets production minimums or age/production minimums for insurability. Exclusion of an actual yield in an eligible crop year does not impact age requirements since the exclusion does not change the age of a perennial crop, see Para. 1803.

(2) If an actual yield is reduced when a practice or production method (e.g., Removal, Dehorning, Grafting, Transitioning to Organic) was performed that reduced the insured crop's production for a specific crop year, then the actual yield for that crop year is not eligible for yield exclusion even if the crop year is an eligible crop year for exclusion in the actuarial documents, see Para. 1823(2) and 1881C.

(3) If one of the actual yields in the most recent three crop years in the APH database is in a crop year that is eligible for exclusion in the actuarial documents, the yield variance test in Para. 1862C is not applicable and the APH database is not reduced for alternate bearing and downward trending.

(4) If elected for crops with a two-year coverage module, YE must be elected by the SCD of the first crop year of the two-year coverage module. Any actual yield in an eligible crop year the insured chooses to not exclude must be identified in the APH database by the PRD of the first crop year of the two-year module.

## 1562 Impact of YE for RO Determined Yields

For the current crop year, any RO Determined Yield Request sent to the applicable RO must identify both: the YE eligible crop years as provided in the actuarial documents; and any YE eligible crop years the insured opts out of excluding. The RO will take YE applicability into consideration when determining the RO Determined Yield and applicable rate. A RO Determined Yield Request cannot be used to make a crop year eligible for yield exclusion.

## 1563 Adjusted Yield

When YE is applicable to an APH database, AIPs must calculate an adjusted yield, which is the average of the annual yields in the APH database:

(1) without yield floor;

(2) without cup;

(3) without any yield exclusions; and

(4) with yield substitutions, if YA is elected by the insured. If YA is not elected by the insured, yield substitutions are not included and the adjusted yield is the average of the annual yields in the APH database.

**Exception:** When yield reductions (see Section 6) apply to the APH database, the adjusted yield must equal the approved APH yield.

The approved APH yield will not be less than the adjusted yield when YE applies to the APH database.

The adjusted yield is not the same as the rate yield. The increase in coverage resulting from the YE relative to the APH yield without YE is used to determine the appropriate premium rate for the effective coverage.

**Note:** The adjusted yield for YE uses similar methodology as the adjusted yield for TA purposes.

## 1564 Rate Yield Calculation

The rate yield is equal to the average yield when yield exclusions are used in an APH database with the following exceptions:

(1) the approved APH yield is reduced for Inconsistent Approved APH Yields (see Para. 1591 for Inconsistent Approved APH Yield determination procedures). In these situations, the rate yield is equal to the approved APH yield; and

(2) the approved APH yield is reduced for Different Production Methods being carried out for the current crop year which results in lower actual yields (see Para. 1592 for Different Production Method determination procedures). In these situations, the rate yield is equal to the approved APH Yield.

## 1565 Calculating the Yields for APH Databases When YE is Elected

When the insured has excluded at least one eligible crop year's actual yield from an APH database, the following yields must be calculated for that APH database.

### A. Average Yield

Calculate the average yield by:

(1) summing the annual yields in the APH database, prior to yield exclusions, yield substitutions, trend adjustments, cup or floor; and

(2) dividing that sum by the number of annual yields in the APH database.

### B. Adjusted Yield

Calculate the adjusted yield by:

(1) Summing the annual yields:

(a) after substituting the applicable percentage of the applicable T-Yield for eligible actual yields that are less than 60 percent of the applicable T-Yield (YA), if elected (see Part 15, Section 3 for details on yield substitutions);

(b) prior to excluding and/or trending any actual yields in an eligible crop year; and

(c) without applying any yield floor or cup;

(2) dividing that sum by the number of annual yields in the APH database.

### C. Approved APH Yield

Calculate the approved APH yield by:

(1) summing the remaining annual yields after:

(a) excluding actual yields for eligible crop years as elected by the insured;

**Note:** If less than four annual yields remain after excluding actual yields, use the applicable T-Yield to meet the APH database four-year minimum. If the applicable T-Yield for the APH database is the variable T-Yield, use the variable T-Yield percentage based on the number of years of actual/assigned yield(s) for the crop in the county to determine the T-Yield. See Para. 1558(6).

(b) substituting YA, if elected;

**C. Approved APH Yield (Continued)**

(2) dividing that sum by the number of years of annual yields that remain in the APH database (do not count the excluded annual yields) and applying any applicable yield reductions (see Para. 1556B). The result is the approved APH yield when the insured has chosen to determine the approved APH yield with YE and YA, if elected.

**Exception:** The approved APH yield will not be less than the adjusted yield (see Para. 1563 above). If the yield calculated in C here is less than the adjusted yield, the adjusted yield calculated in B becomes the approved APH yield.

(a) The AIP must report to PASS the YE option code and the yield limitation flag of 15 on the P15 record if an APH database has actual yields in eligible crop years excluded with no yield substitutions (trend adjustments may apply);

**Note:** This yield limitation flag is used for YE; YE and TA; plus any other options. This flag is not used if YA applies to the APH database.

(b) The AIP must report to PASS the YE option code and the yield limitation flag of 9 on the P15 record if an APH database has:

(i) actual yields in eligible crop years excluded and has yield substitutions; or

(ii) actual yields in eligible crop years excluded, yield substitutions and trend adjustments.

**Note:** This yield limitation flag is used whenever YA applies to an APH database including when YA and YE; YA, YE and TA; plus any other options apply.

**D. Rate Yield**

The Rate Yield is equal to the average yield unless yield reductions apply, see Para. 1591 and 1592.

**1566 Determining Premium Rates When YE Applies to an APH Database**

If the approved APH yield calculation chosen by the insured excludes at least one actual yield in an eligible crop year, the average yield is used as the rate yield and the effective coverage level (based on the adjusted yield) is used for determining premium rate.

**1567-1570 (Reserved)**

## Section 5 Yield Cup Option

### 1571 General Information

A cup mitigates the effect of a catastrophic year on an approved APH yield by preventing it from decreasing by more than 10 percent compared to the prior year's approved APH yield and is only available for carryover insureds.

### 1572 Eligibility for Cups

**A. Election**

To be applicable for the current crop year, the insured must elect the YC:

(1) By the applicable SCD;

(2) On a crop/county basis; and

(3) On an Application or Policy Change form by including the "YC" option code.

AIPs are responsible for advising insureds who elect the YC that cups will automatically apply to approved APH yields, if an approved APH yield calculated using the cup is higher than other yield measures unless the insured opts out of applying a cup to the APH database or one of the exceptions in Para. 1573B apply.

**Note:** For insureds with 2019 policies with a contract change date on or after November 30, 2018, AIPs may choose to advise all such insureds, in writing, that the YC will apply to their approved APH yields, if applicable, unless the insured specifically elects that the YC not apply by the SCD/cancellation date shown in the actuarial documents for the policy.

**B. Availability**

The YC must be provided in the actuarial documents for cups to be available for the crop and county. Cups are available only for carryover additional coverage policies.

**Note:** Although a cup can only apply to an APH database with a prior year's approved APH yield for a carryover insured, a new insured may elect the YC the initial year of the policy.

**C. Continuous Election**

The YC is a continuous election that remains in effect unless cancelled.

**D. Cancellation**

The YC must be cancelled in writing on or before the cancellation date for the crop for the effective crop year.

### E. Transfers

When the policy is transferred to a different AIP, the YC is considered cancelled. If the insured wants to continue the use of cups, the insured must elect the YC with the assuming AIP on or before the SCD.

## 1573 Applicability of Cups

When the YC is elected, cups apply to all APH databases when the approved APH yield calculated using a cup is higher than the approved APH yield using any other yield measure (i.e., yield floor, YA, YE), when other yield measures are applicable, unless the insured notifies the AIP in writing by the PRD of any APH database they do not choose to have a cup apply.

### A. When Cups May Apply

When the YC is elected by the SCD, a cup will apply to an APH database when the approved APH yield calculated using other yield measures is less than 90 percent of the prior year's approved APH yield. Cups are applied on an APH database basis. Cups will only apply to APH databases with at least one actual or assigned yield. A cup may apply when:

(1) yield substitution(s) under the YA election are used to calculate the current or prior year's approved APH yield, see Part 15 Section 3;

(2) yield(s) are excluded under the YE election in calculating the current or prior year's approved APH yield, see Part 15 Section 4; and/or

(3) the prior year's approved APH yield was a yield floor.

### B. When Cups Do Not Apply

A cup does not apply to an APH database if:

(1) there is no prior year's approved yield for the APH database (e.g., new insureds or new APH database due to added land, P/T, new producer, etc.);

(2) more than one year's production history (including zero planted) is added to the APH database;

(3) an approved APH yield cannot be determined by the AIP and a special case for a yield determination is sent to the RO (RO determined yields and RO master yield determinations);

(4) non-actual yields are replaced with adjusted T-Yields for high-risk or unrated land the first effective crop year;

**B. When Cups Do Not Apply (Continued)**

(5) previously approved APH yields are corrected/changed. These include:

(a) revision of a previously reported actual yield based on acceptable, more accurate production records submitted by the insured (e.g., grade adjustments for onions).

(b) revision of approved APH yields are required for the current crop year according to APH review procedure when discrepancies in production and/or acreage information are found during APH field reviews that cause changes in APH yields.

**Exception:** If the approved APH yield does NOT require correction for the current crop year, cup procedures apply (for current and subsequent crop year when the yield is corrected). Revised APH yields must be reported to RMA.

(c) additional actual yields are submitted and accepted for year(s) other than the most recent APH crop year in the APH database (e.g., assigned yields or T-Yields are replaced with actual yields).

(d) when units/P/Ts with established APH databases containing actual and/or assigned yields are combined or further divided. This does not include change in unit numbering only when the actual production history is not combined or divided.

(e) the initial year the CC approved APH yield is used in place of the SF approved APH yield for the SF practice.

(f) the T-Yield decreases 10 percent or more and the T-Yield is required to calculate the approved APH yield when T-Yield(s) are used to complete the 4-year APH database.

(g) AIP errors. Incorrect application of procedure by AIP.

(h) corrected or revised claims lower the actual yield used for APH purposes (by P/T/TMA) by 10 percent or more.

(6) high variability conditions are triggered and AIPs are authorized to determine the approved APH yield;

(7) when a PAW triggers a PAIR or request for RO Determined Yield;

(8) when coverage for the crop is a two year crop module;

**B. When Cups Do Not Apply (Continued)**

(9) an APH database is converted from units to blocks or reporting by blocks is discontinued. Procedures for calculating cups do not apply for the current crop year:

(a) if the previous year's approved APH yield was calculated for a unit and the current crop year is using APH block production;

(b) if the previous year's approved APH yield was calculated using block production with approved yields issued by blocks and use of the block production is discontinued for the current crop year; or

(10) the insured opts out of a cup applying to the APH database.

**C. Opting Out of Cup Applying to an APH Database**

When an insured has chosen to opt out of a cup applying to an APH database, the insured must sign the APH database. See DSSH for the Opt-Out statement standards for cups.

## 1574 Applicability of WAs

Generally, WAs are eligible for cups if the actuarial documents for the crop/county identify the cup option.

## 1575 Applicability of Yield Floors and Yield Reductions

**A. Yield Floor**

An approved APH yield using a cup is not eligible for a yield floor, since both the cup and floor modify the approved APH yield. APH databases where the approved APH yield calculated with the yield floor is higher than the approved APH yield would be with a cup remain eligible for a yield floor, when authorized by Part 17, Section 4.

**B. Yield Reductions**

Procedures concerning yield reductions contained in Part 15, Section 6 are unaffected when the YC is elected.

When actual yields are reduced due to being identified as an excessive yield, a cup cannot apply to the APH database.

When reductions of approved APH yields due to inconsistent approved APH yields or different production methods apply to an APH database in accordance with Para. 1591 and 1592, a cup cannot apply to the APH database.

## 1576 Cup Interaction with YA and YE

(1) A producer may elect and apply cups, YA and YE options on a policy.

(2) Application of YA and/or YE on an actual yield for an eligible crop year within an APH database will not affect the calculation of the approved APH yield if a cup applies to the APH database (i.e., the approved APH yield calculated using the cup is higher than the approved APH yield calculated using YA and/or YE).

## 1577 Impact of Cup Specific to Category B Crops

### A. Impact of Cup on MY

If MYs are applicable, apply the cup to the MY summary. See Part 17, Section 7 and Exh.17 for APH MY summary requirements. Adjusted yields, average yields, approved APH yields, and rate yields are determined in the MY Summary.

### B. Impact of Cup on SF Practice

For a SF practice using the special procedures in Para. 1122, apply cup, if applicable, to both the SF and the CC practices prior to determining the "higher" approved APH yield to be used for the SF practice in accordance with Para. 1122 B.

### C. Impact of Cup on SA T-Yields

While added land and new crop/P/T procedures (Part 17, Sections 9 and 10) are not affected by the election of the YC, the calculation for SA T-Yields is changed when a cup applies to an approved APH yield.

SA T-Yields will continue to be determined based on the crop year the APH database is established, by crop/P/T/TMA. However, instead of using the approved APH yield from each of the insured's existing APH databases for the policy that have at least one year of actual/assigned yields, by crop/P/T/TMA to calculate the SA T-Yield, use:

(1) the adjusted yield for those APH databases with approved APH yields calculated using the cup; and

(2) the approved APH yield for those APH databases where the approved APH yield is not calculated using a cup and actual yields have not been excluded that have at least one actual/assigned yield in the current crop year.

All other calculations and requirements for use of the SA T-Yield remain unchanged.

### D. Impact of Cup on North Dakota PTY

The PTY is a T-Yield calculated using the insured's own actual yields and, if applicable, assigned yields. Use of the PTY within an APH database in the current or previous crop year does not impact whether a cup may apply to the APH database.

## 1578 Impact of Cup for RO Determined Yields

Cups do not apply when a RO Determined Yield is applicable.

## 1579 Adjusted Yield

When a cup is applicable to an APH database, AIPs must calculate an adjusted yield, which is the average of the annual yields in the APH database:

(1) without yield floor;

(2) without cup:

(3) without any yield exclusions; and

(4) with yield substitutions, if YA is elected by the insured. If YA is not elected by the insured, yield substitutions are not included and the adjusted yield is the average of the annual yields in the APH database.

**Exception:** When yield reductions (see Part 15 Section 6) apply to the APH database, the adjusted yield must equal the approved APH yield.

The approved APH yield will not be less than the adjusted yield when a cup applies to the APH database.

The adjusted yield is not the same as the rate yield. The increase in coverage resulting from the cup relative to the APH yield without a cup is used to determine the appropriate premium rate for the effective coverage.

**Note:** The adjusted yield for a cup uses similar methodology as the adjusted yield for YE purposes.

## 1580 Calculating Yields for an APH Database When Cup Applies

When the insured has elected the YC and a cup applies to the APH database, the following yields must be calculated for that APH database.

### A. Average Yield

Calculate the average yield by:

(1) summing the annual yields in the APH database, prior to yield exclusions, yield substitutions, trend adjustments, cup or floor; and

(2) dividing that sum by the number of annual yields in the APH database.

**B. Adjusted Yield**

Calculate the adjusted yield by:

(1) Summing the annual yields:

(a) after substituting the applicable percentage of the applicable T-Yield for eligible actual yields that are less than 60 percent of the applicable T-Yield (YA), if elected (see Part 15, Section 3 for details on yield substitutions);

(b) prior to excluding and/or trending any actual yields in an eligible crop year; and

(c) without applying yield floor;

(2) dividing that sum by the number of annual yields in the APH database.

**C. Approved APH Yield**

Calculate the approved APH yield by:

(1) summing the remaining annual yields after:

(a) excluding actual yields for eligible crop years as elected by the insured;

**Note:** If less than four annual yields remain after excluding actual yields, use the applicable T-Yield to meet the APH database four-year minimum. If the applicable T-Yield for the APH database is the variable T-Yield, use the variable T-Yield percentage based on the number of years of actual/assigned yield(s) for the crop in the county to determine the T-Yield. See Para. 1558(6).

(b) substituting YA, if elected;

(2) dividing that sum by the number of years of annual yields that remain in the APH database (do not count the excluded annual yields) and applying any applicable yield reductions (see Para. 1556C). This result is compared to 90 percent of the previous year's approved APH yield. The higher of this comparison is the approved APH yield when the insured has elected the YC and does not opt-out of having a cup apply to the APH database.

**Exception:** The approved APH yield will not be less than the adjusted yield (see Para. 1563 above). If the yield calculated in C here is less than the adjusted yield, the adjusted yield calculated in B becomes the approved APH yield.

**C. Approved APH Yield (Continued)**

When a cup is used to calculate the approved APH yield:

(a) The AIP must report to PASS the YC option code and the yield limitation flag of 16 on the P15 record;

(b) The AIP must report to PASS the YC option code and the yield limitation flag of 9 on the P15 record if the approved APH yield is calculated using a yield cup and the insured has also elected YA.

**D. Rate Yield Calculation**

The rate yield is equal to the average yield when a cup applies to the APH database, unless yield reductions apply (see Para. 1591 and 1592).

**1581-1587 (Reserved)**

## Section 6 Yield Reductions

### 1588 General Information

This section addresses approved APH yield reductions required by Section 3(h) of the BP. If insureds or anyone assisting them have intentionally concealed or misrepresented any material fact relating to the policy, such insureds will be subject to concealment, or misrepresentation. Approved APH yields calculated for a P/T/TMA of the insured crop must be reduced for the following situations when discovered:

**A. Excessive Actual Yields**

Excessive actual yield is an actual yield that is identified as excessive for the county/crop/P/T, see Para. 1590. If the insured:

(1) provides verifiable records that support the actual yield but cannot prove that there is a valid basis for the excessive yield, the excessive actual yield must be reduced; or

(2) does not provide verifiable records to support any excessive actual yield and

(a) the insured is a new insured:

(i) production reports for the crop year are not acceptable;
(ii) production reports are not used to calculate the APH yield; and
(iii) variable T-Yields will apply.

(b) the insured is a carryover insured:

(i) production reports for the crop year are not acceptable; and
(ii) assigned yields and related procedures will apply.

**B. Inconsistent Approved APH Yields**

Inconsistent approved APH yields are approved APH yields greater than 115 percent of the average of the approved APH yields of all applicable APH databases that have actual/assigned yields for the same county/crop (by P/T/TMA); or the county T-Yield if no applicable APH databases exist for comparison, see Para. 1591. Inconsistent approved APH yields are reduced if:

(1) the current year's insurable acreage (including applicable PP acreage) using the inconsistent approved APH yield is greater than 400 percent of the average number of acres in the APH database, or

(2) the acres contained in two or more individual crop years in the APH database are each less than 10 percent of the current year's insurable acres in the unit (including applicable PP acreage); and

(3) the AIP determines there is no valid agronomic basis to support the approved APH yield.

### C. Different production methods

If an insured uses a different production method which is likely to result in a lower yield than the production method upon which the APH is based, approved APH yields will be reduced to reflect the different production method. See Para. 1575 and also Part 11 Section 4 for Organic Transitioning without a Plan.

## 1589 General Rules

When reductions to approved APH yields are required for: (1) excessive yields; (2) inconsistent approved APH yields, if insured acreage limitations are exceeded; or (3) different production methods are carried out that will likely result in lower actual yields, the following general rules apply:

### A. Actual Yields

Actual yields, for the purpose of identifying excessive actual yields and inconsistent approved APH Yields, includes:

(1) actual yields identified by yield descriptors "A, BF, AY, FA, NA, and NV";

(2) temporary yields identified by the yield descriptor "J";

(3) actual/summarized yields identified by yield descriptors "R, RY and NR";

(4) prorated yields identified by yield descriptors "PA, and PR";

(5) weighted average yields when PP payments are limited to 35 percent of the PP coverage and the database contains both PP acreage and planted acreage of the first insured crop identified by yield descriptors "PW, NW, and WY";

(6) simple average actual yields identified by the yield descriptor "AX" and applicable T-yields identified by the yield descriptor "TX" that are used to replace excessive actual yields; and

(7) duplicated yields identified by yield descriptors "DA".

### B. Assigned Yields

Assigned yields, for the purpose of identifying excessive actual yields and inconsistent approved APH Yields, includes:

(1) only assigned yields used for failure to provide acceptable records identified by yield descriptor "P"; and

**B. Assigned Yields (Continued)**

(2) it does not include those yields assigned when PP payments are limited to 35 percent of the PP coverage and the database contains only PP acreage of the first insured crop identified by yield descriptor "PP".

**C. Reductions Made after Initial Approved APH Yields**

Reductions made after initial approved APH yields for the crop year have been mailed or otherwise made available to insureds are not reductions to approved APH yields that would qualify for a mutual consent cancellation of the affected crop's policy. See GSH Part 7 Para. 233D for more information regarding mutual consent cancellation.

**D. Reductions are Made Separately by APH Database**

If separate APH databases have been established for OUs within a BU or for BUs and/or OUs within an EU, the reductions are made separately for each APH database, regardless of the unit structure selected for the current crop year.

**Example:** Separate APH databases are maintained for OUs within a BU, but the acreage is insured as a BU for the current crop year. Any required reduction is made on the OU-based separate APH databases. The APH databases are not combined into a BU APH database prior to any reduction being made.

**E. Reductions for Not Accurately Reporting**

Reductions are made in addition to other consequences for not accurately reporting all information used to calculate approved APH yields such as, correcting the unit structure, if necessary.

**F. Reductions Based on the T-Yield**

Reductions that are based on the applicable T-Yield, must use the T-Yield published in the actuarial document for the county crop P/T/TMA. For pecan revenue, the lowest available dollar span as shown on the actuarial document is used.

**G. Cups**

Cups do not apply if yield reductions cause actual yields or approved APH yields to decrease by 10 percent or more.

**H. Actual Yields from Another Producer**

Actual yields provided by another person (acreage and production records) and used by an insured that shares in the insured crop (e.g., landlords and tenants) or actual yields transferred to another person via APH production reports/APH databases are also subject to the adjustments indicated by Para. 1590-1592.

### I. Order of Precedence for Yield Reductions

If more than one method of yield reductions apply to an APH database, adjustments must be made in the following order:

(1) excessive actual yields, if applicable;

(2) inconsistent approved APH yields when insured acreage limitations are also exceeded, if applicable; and

(3) reduction for carrying out different production methods.

## 1590 Excessive Actual Yields

Primarily, APH reviews for excessive yields will be identified through requirements in Appendix IV of the SRA. However, AIPs may also use this procedure to adjust any excessive yields they identify. AIPs must review all APH databases identified as having an excessive actual yield.

Notwithstanding any other review requirements, AIPs are required to complete APH record reviews for each crop year that excessive actual yields are reported. Production evidence for ALL APH databases that comprise the BU that contain at least one excessive actual yield must be reviewed (e.g., a BU consisting of three OUs, one of which contains an excessive actual yield, must have an APH record review conducted on all three OUs).

### A. Verifiable Records

Provide verifiable records, see Part 14 Section 2 for verifiable records requirements, to support excessive actual yields that are significantly different than other producers' actual yields in the county or other actual yields reported for the insured's farming operation and the insured:

(1) can prove there is a valid basis to support the differences in the yields, subsequent to the AIP's review and acceptance, the AIP may accept the excessive yield.

(2) cannot prove there is a valid basis to support the differences in the yields, the approved APH yield will be reduced by replacing excessive actual yield(s) with the:

(a) simple average of all actual yields (including excessive actual yields prior to being adjusted) and assigned yields for the same crop year for the same P/T and TMA (if applicable) for the crop in the county.

Use the applicable actual yield descriptor "AX", see Exh. 15 to identify the simple average actual yield used instead of excessive actual yields; or

(b) applicable T-yield, if the insured has no other applicable actual yields. Use a "TX" yield descriptor to identify when the applicable T-Yield replaces the excessive actual yield.

**B. Do Not Provide Verifiable Records to Support Excessive Actual Yields**

(1) For carryover insureds:

(a) approved APH yields will be reduced by replacing each excessive actual yield with:

(i) an assigned yield (0.75 X the previous year's approved APH yield) see Part 21 for Pecan Revenue or,

(ii) 75 percent of the applicable T-yield if an approved APH yield was not calculated for the previous crop year.

(b) such assigned yields will be identified with the "P" yield descriptor see Exh. 15.

(c) production report(s) for such crop years (for the crop for the county) without supporting verifiable records are not acceptable. All production records for all units except for loss records for the crop for the crop year within the county are unacceptable and assigned yields and related procedures apply. Loss records (excluding appraisals for uninsured causes of loss) must be used for APH.

(2) For new insureds:

(a) approved APH yields will be recalculated without using the actual yields.

(b) production report(s) for such crop years (for the crop for the county) without supporting verifiable records are not acceptable. Approved APH yields will continue to be calculated as indicated in Part 17 and 18 following standard APH procedures. Assigned yields do not apply to new insureds because there is no prior approved APH yield.

**C. Valid Basis to Support the Excessive Actual Yield**

If an actual yield is identified as excessive and the insured provides verifiable records to support the excessive actual yields, the excessive actual yield is replaced unless the AIP determines there is a valid basis to support the excessive yield.

To determine whether a valid basis supports an excessive yield, AIPs must further review situations meeting the criteria triggering yield reductions.

(1) A valid basis to support the excessive actual yield may be determined if the AIP determines that the reported actual yield(s) for the acreage are not artificially high:

(a) production methods of the acreage with the high yield(s) are comparable to that of other acreage of the insured crop/P/T; and

### C. Valid Basis to Support the Excessive Actual Yield (continued)

(b) the high yield(s) does not appear to be the result of shifting production from another unit/APH database.

(2) A valid basis to support the excessive yield does not include factors such as intensely farmed acreage and acreage being moved from one APH database to another APH database.

(3) AIPs may request supporting information and records in addition to the insured's production report and APH databases upon which to base their decision on whether a valid basis exists to support the excessive actual yield.

Additional production evidence and information would include, but is not limited to the following:

(a) production evidence of acreage and production;

(b) documentation of why such acreage and yield patterns occurred;

(c) the production method that was carried out; and

(d) soil survey maps if differences in soil productivity within the unit are a concern should be requested.

(4) AIPs must maintain the documentation used to justify their decision and if requested, provide a copy to RMA. Once the AIP has determined that the reported actual yields are not artificially high, additional supporting information obtained from the insured is not required.

## 1591 Inconsistent Approved APH Yields and Insured Acreage Limitations

### A. Applicability

This procedure applies to Category B APH crops (new and carryover insureds) using standard APH procedures.

(1) It does not apply to Category B crops for which the insured elects MYs, Category C APH crops or pecan revenue.

(2) AIPs are not required to review all APH databases to determine whether reductions apply for inconsistent approved APH yields when insured acreage limitations are exceeded see C and D below.

(3) Such reductions must be made anytime the circumstances requiring them are discovered (e.g., when calculating approved APH yields, processing acreage reports, during APH reviews, or completing/processing claims) unless it is determined there is a valid agronomic basis to support the inconsistent approved APH yield.

**A. Applicability (Continued)**

(4) Reductions for excessive actual yields, if applicable, must be made prior to reductions for inconsistent approved APH yields when insured acreage exceeds limitations.

(5) Inconsistent approved APH yields must be reviewed by the AIP if the insurable acreage for the current crop year (including applicable PP acreage) compared to acreage reported for APH purposes exceeds one or both of the insured acreage limitations, see C below.

**B. Inconsistent Approved APH Yield Calculations**

(1) If more than one APH database contains actual/assigned yields for the same P/T/TMA for the policy/crop/county, determine the simple average of the approved APH yields of all such databases.

High-risk land insured under a CAT policy is not included with an insured's additional coverage policy when calculating the simple average of the approved APH yields for the additional coverage policy (separate simple average yields are calculated for each policy). Round the simple average according to the crop's APH per acre rounding rules; and

(a) multiply the result times 1.15.

(i) Compare each individual approved APH yield to the result.

(ii) Approved APH yields that exceed this result are considered inconsistent approved APH yields and will be reduced only if one or both of the insured acreage limitations are exceeded and there is no valid agronomic basis to support the inconsistent approved APH Yield, (see C and D below).

(b) if the insurable acreage limitation is also exceeded (see C below), exclude APH database(s) with inconsistent approved APH yields that must be reduced and then calculate the average of the approved APH yields for the remaining APH databases containing actual/assigned yields.

(i) Round the average of the approved APH yields according to the crop's APH yield per acre rounding rules.

(ii) The resulting average yield is used as the approved APH yield for APH databases with inconsistent approved APH yields that must be reduced.

(2) If no other existing APH databases containing actual/assigned yields for the same P/T/TMA for the policy/crop/county are present for comparison, multiply the county T-yield by 1.15.

**B. Inconsistent Approved APH Yield Calculations (continued)**

(a) If the approved APH yield exceeds the result, it is considered inconsistent and if one or both insured acreage limitations are exceeded, (see C below) and there is no valid agronomic basis to support the inconsistent yield, (see D below), it is reduced to the applicable T-yield.

(b) When added land as a separate APH database or new crop/P/T/TMA applies and there is only one existing APH database on which the SA T-Yield is based, the approved APH yield for the existing APH database is compared to the county T-Yield multiplied by 1.15 prior to calculation and use of the SA T-Yield for the new APH database(s).

If the approved yield for the existing APH database exceeds the result of multiplying the county T-Yield by 1.15, the county T-Yield is used to determine the approved APH yield for all of the current year's insurable acreage of the same crop/P/T that will use the inconsistent yield, i.e., the approved APH yields for the new APH database and the existing APH database must be reduced to the county T-Yield.

**Example:** An insured has one existing OU APH database for corn and adds land as a separate OU. Compare the approved APH yield for the existing APH database to the county T-Yield multiplied by 1.15 prior to establishment of the added land APH database to determine whether the yield is inconsistent.

The approved APH yield for the added land APH database, as well as the approved APH yield for the existing OU APH database, will be the county T-Yield if the current year's acreage (considering acreage on the existing OU and added land OU) exceeds one or both of the insured acreage limitations, unless it is determined there is a valid agronomic basis to support the inconsistent approved APH yield.

(3) Reduced approved APH yields apply to all insurable acreage (using the approved APH yield calculated for the APH database), not just the insurable acreage that exceeds the limitation. For example, the acreage limitation was 320 acres and 400 acres were reported for the current year, in this case the reduced yield applies to all 400 acres).

(4) Use yield limitation flag "10" to identify reduced approved APH yields calculated when inconsistent approved APH yields apply and insurable acreage limitations have been exceeded.

**C. Insured Acreage Limitations**

(1) Acreage with excessive actual yields that have been replaced and acreage with assigned yields will be used when calculating the average acreage.

(2) Insured acreage exceeds the limitations permitted by the policy if (a) or (b) apply.

(a) The current year's insurable acreage (including applicable PP acreage) using the inconsistent approved APH yield is greater than 400 percent of the average number of acres with actual/assigned yields reported for APH purposes in the APH database.

(b) The acres contained in two or more individual APH crop years with actual/assigned yields reported in the APH database are each less than 10 percent of the current year's insurable acreage in the unit. To determine:

(i) divide the acres reported for each APH crop year by the insured acreage for the current crop year.

(ii) round to the hundredths place.

If two or more crop years are less than .10, the limitation is exceeded.

**D. Examples**

See Exh. 15 for an example of when inconsistent approved APH yields and insured acreage limitations criteria are met and an example of when that criteria is not met.

(1) To determine if the 400 percent acreage limitation has been exceeded:

(a) total the acres for years that have actual/assigned yields reported;

(b) divide the total acres by the number of years for which actual/assigned yields have been reported and round the result according to the crop's acreage rounding rules. The result is the average acres; and

(c) multiply the average acreage by 4.00. If the insurable acreage for the current crop year using the inconsistent yield is greater than the result, the acreage limitation is exceeded.

(2) When there is only one existing APH database, all of the current year's acreage for the same P/T/TMA would be included in the comparison, regardless of whether the current year's insurable acreage is contained in one or more APH databases.

**Example:** The approved APH yield is 40 bushels and the T-yield is 22 bushels. An average of 3 acres per year was used to establish the 40 bushel approved APH yield.

**D. Examples (continued)**

In 2019, the insured plants 400 acres in the same unit. Since there are no other APH databases with approved APH yields with actual/assigned yield to compare, the approved APH yield of 40 bushels is compared to the T-yield of 22 bushels which is greater than 115 percent.

Additionally, the insured planted 400 acres in the same unit where the average number of acres used to establish the yield was 3 acres. The 400 percent acreage limitation is exceeded and the approved APH yield is reduced to the county T-Yield, unless it is determined there is a valid agronomic basis to support the inconsistent approved APH yield.

**Example:** The approved APH yield for the existing unit is 40 bushels and the T-Yield is 22 bushels. An average of 3 acres per year was used to establish the 40 bushel approved APH yield for the existing OU APH database. In 2019, the insured plants a total of 400 acres in three separate added land OUs.

The approved APH yield of 40 bushels is compared to the county T-Yield. Therefore, all of the current year's insurable acreage for the crop/P/T would be included in the comparison, in this example, all 400 acres.

The 400 percent acreage limitation is exceeded and the approved APH yield for the added land OUs and the existing OU is the county T-yield unless it is determined there is a valid agronomic basis to support the inconsistent approved APH yield.

**E. Valid Agronomic Basis to Support the Inconsistent Approved APH Yield**

If an approved APH yield is identified as inconsistent and the insured acreage limitation is met, the approved APH yield must be reduced unless the AIP determines there is a valid agronomic basis to support the approved APH yield. To determine whether a valid agronomic basis supports an inconsistent yield, AIPs must further review situations meeting the criteria triggering yield reductions.

(1) A valid agronomic basis to support the inconsistent approved APH yield may be determined if each of the following three criteria is met:

(a) the AIP determines that the reported production for the small amounts of acreage is comparable to the reported production of the rest of the acreage insured on the unit/APH database for the current or prior crop years;

(b) the high yields do not appear to be the result of shifting production from another unit/APH database, and

**E. Valid Agronomic Basis to Support the Inconsistent Approved APH Yield (continued)**

(c) the insured acreage limitation was met due to a reasonable expansion of the farming operation or, a change in the insured's unit structure (e.g., an insured switches from OUs to an EU causing acreage within an OU APH database to exceed the less than 10 percent acreage limitation based on the acreage contained within the EU), crop rotation, or other situation that inappropriately triggers the acreage limitation.

(2) A valid agronomic basis to support the inconsistent approved APH yield does not include factors such as intensely farmed acreage and acreage being moved from one APH database to another APH database.

(3) If an AIP determines that a valid agronomic basis exists to support the inconsistent approved APH yield under (1) above, the AIP is not required to request additional documentation from the insured.

(4) If AIPs are unable to determine if a valid agronomic basis exists under (1) above, AIPs may request supporting information and records in addition to the insureds production report and APH databases upon which to base their decision on whether a valid agronomic basis exists to support the inconsistent approved APH yield.

If such documentation is requested and supplied by the insured, AIPs must maintain the documentation used to justify their decision and, if requested, provide a copy to RMA. Additional production evidence and information would include, but is not limited to the following:

(a) production evidence of acreage and production;

(b) documentation of why such acreage and yield patterns occurred;

(c) the production method that was carried out on small amounts of acreage with high yields; and

(d) soil survey maps if differences in soil productivity within the unit are a concern should be requested.

## 1592 Different Production Methods

Approved APH yields are reduced if different production method(s) are carried out for the current crop year that will likely result in lower actual yield(s) than the average of the actual yields for the production method previously reported.

**Exception:** For Category C organic crops, see Para. 1854, all other changes in production methods must be identified on the PAW to identify whether a PAIR and RO DY is required due to the change in production method that will likely result in a lower yield.

**Example:** An insured has been insuring NI wheat. In 2019, the insured begins transitioning some of the NI wheat to organic without an organic plan. For category B crops, see Para. 1702Q and Exh. 15 GG for example.

**Example:** IRR and NI practices are applicable and an APH database for the NI practice contains actual yields from acreage where water was applied prior to planting (pre-watered) in previous crop years. For the current crop year, the acreage was not pre-watered prior to planting. This example is used throughout this topic.

## A. Requirements

(1) An insured must notify the AIP by the ARD of changes in production methods that may result in lower actual yields than previously reported. Insureds utilizing CC yields instead of SF yields according to procedures in see Part 11 Section 2 are not affected by this provision, since the CC practice is a lower yielding practice than SF.

(2) AIPs are not required to review all APH databases to determine whether reductions apply when different production methods are carried out that will likely result in lower actual yields.

However, such reductions must be made anytime the circumstances requiring them are discovered (e.g., when calculating approved APH yields, processing acreage reports, during APH reviews, or completing/processing claims).

## B. Lower Yielding Production Method

When a lower yielding production method than was reported to calculate the approved APH yield is carried out, the approved APH yield for the current crop year will be the lower of the approved APH yield for the yield method upon which the APH is based, or the applicable of the following methods:

(1) the simple average of the approved APH yields for all other APH databases for the same production method as carried out for the current crop year (within the same P/T/TMA, if applicable).

(a) Any applicable reductions for excessive actual yields and for inconsistent approved APH yields when acreage limitations are exceeded must be made prior to calculating the simple average of the approved APH yields for the other units.

(b) In the example above, the approved APH yield would be reduced to the simple average of all NI approved APH yields containing actual yields that do not contain acreage that had been pre-watered prior to planting;

(2) the applicable T-yield if other APH database(s) do not exist for the same production methods carried out for the current crop year; or

**B. Lower Yielding Production Method (continued)**

(3) a weighted average approved APH yield if more than one production method is carried out for the current crop year on acreage of the crop to which the approved APH yield applies.

(a) Using the pre-watered NI example, 50 acres were pre-watered (the production method for which actual yields were reported) but 40 acres were not pre-watered (a lower yielding production method).

(b) The approved APH yield for the production method utilizing pre-watering is 65 bu. per acre, and the simple average of the approved APH yields (containing actual yields) for NI acreage not utilizing pre-watering is 50 bu. per acre.

(c) The weighted average reduced approved APH yield for the 90 acres is 58 bu. per acre (50.0 X 65.0 = 3,250) + (40 X 50 = 2,000) / 90.0.

**C. Separate APH Databases are Not Established for Different Production Methods**

Separate APH databases are not established for different production methods, the acres and production for various production methods must be reported according to the applicable P/T. Using the previous example, the total acres (90.0) and total production from the 90 acres would be reported as a NI practice. In subsequent crop years if the higher yielding production method is:

(1) carried out, the APH database containing the production data will be used (no reduction necessary).

(2) not carried out, (in the example, not pre-watered) the approved APH yield is adjusted as indicated in B above, as long as any actual yield from the higher yielding production method remains in the database.

**Exception:** Separate APH databases will be established for acreage transitioning to certified organic without a plan insured under the conventional practice. These APH databases will be identified with the APH Procedural Exception Code of "T" (see Para. 1505 E for more information regarding APH Procedural Exception Codes).

**D. AIP Not Notified**

If the AIP is not notified and it is discovered that a different production method has been carried out that likely results in lower actual yields than for the production method previously reported, the yield will be reduced as indicated by B above.

### E. Applicable Yield Flag

Use yield limitation flag "11" to identify reduced approved APH yields when different production methods have been carried out.

**1593-1594 (Reserved)**

## 1595 Review Requirements

All required APH reviews must be conducted in accordance with Appendix IV of the Standard Reinsurance Agreement (SRA).

(1) AIPs are required to review those Category B and C eligible crop insurance contracts identified by the criteria as provided in Appendix IV or as otherwise specified by RMA. This does not limit the ability of an AIP to select a policy for review based upon its internal established criteria.

(2) The AIP must obtain the production evidence from the insured for the unit, determine if the production evidence is acceptable and compare it to the yield certified by the insured. See Parts 13 and 14 for acceptable production report and production evidence requirements.

(3) If AIP determines the production evidence is not acceptable, the amount of production on any acceptable production evidence is not reasonable or the AIP has reason to question any of the production evidence provided, the AIP may do either or both of the following:

(a) verify the physical existence of the production.
(b) require additional acceptable verifiable records (e.g., settlement sheets, etc.).

(4) If the insured does not provide acceptable production evidence, or the production evidence provided does not support what the insured certified on the production report, then assigned yield provisions apply.

**Exception:** If the difference between the yield certified and the verifier determined yield is within tolerance as provided in Para. 1597, assigned yield will not apply. If an assigned yield applies and the verifier determined yield is less than the assigned yield, then the verifier determined yield would apply.

For plans of insurance that require production reporting but not an approved APH yield, e.g., ARPI, when the verifier determines a yield certified is incorrect, the yield certified must be corrected to the verifier determined yield.

## 1596 Correcting APH Yields

At any time it is discovered that an insured has misreported any material information used to determine the approved APH yield or the approved APH yield is not correct, the following actions must be taken:

(1) correct the approved APH yield for the crop year such information is not correct and all subsequent years;

(a) if the incorrect information is the result of an error by the AIP or someone from USDA then correct the error.

(b) if the insured has misreported the information on the production report then assigned yield(s) apply for the annual yield(s), unless an exception provided in Para. 1597 applies.

(2) correct the unit structure, if necessary;

(3) any overpaid or underpaid indemnity or premium must be repaid or refunded; and

(4) the insured will be subject to misreporting provisions contained in the policy unless the incorrect information was the result of an error by the AIP or someone from USDA.

To correct the approved APH yield, a revised production report and APH database is required if there is a difference between the yield certified and the yield verified.

**A. Non-loss unit(s)**

If the approved APH yield is determined to be incorrect by the verifier, the approved APH yield must be revised in the current crop year by using the yield determined to be correct based on the production records by the reviewer.

**B. Claim Situation**

In a claim situation, an APH database for the loss unit is reviewed for accuracy, and any discrepancies between reported and determined yields are corrected and any policy provisions regarding misreporting will apply.

However, when the corrected yield results in a change in liability, the liability for claim purposes will not be increased; but will be decreased, if applicable. See LAM for calculating liability for claim for indemnity.

**C. Actual Yields Determined Incorrect**

When actual yields, other than those certified for the current year, are determined incorrect:

(1) a review of prior years' reported actual yield(s) must be completed before the review for the current year can be completed.

(2) if the prior years' reported actual yield(s) are incorrect, then:

(a) prior year(s) approved APH yield(s) must be corrected; and

(b) prior year'(s) associated premium and/or indemnity must be corrected, unless prior years were not insured. If incorrect prior year(s) were insured with a different AIP, then that AIP must be notified of the review findings. The previous AIP must make the applicable corrections.

For carryover insureds, new insureds and all plans of insurance that require production reporting, when production and/or acres certified on the production report do not match exactly with what the insured can substantiate and:

(1) the actual yield for the applicable crop year does not change, then no assigned yield applies. However, the production and/or acres must be corrected for the current crop year.

**Example:** The insured has a 10 acre field and certified on the production report that the APH database had 1,000 bu. of corn. An APH review is conducted, and production evidence from the insured identifies that the production evidence (settlement sheets) supports 1,003 bu. Since the actual yield does not change (1,000 bu. / 10 acres = 100 bu. actual yield vs. 1,003 bu. / 10 acres = 100.3 bu. which when rounded equals 100 bu. actual yield), the production is corrected and assigned yields do not apply.

(2) the actual yield is different than certified, but the average and approved APH yield do not change. No assigned yield applies and production and/or acres for the current crop year are corrected using the production/acres determined to be correct.

**Example:** The insured has a 10 acre field and certified on the production report that the APH database had 1,000 bu. of corn. An APH review is conducted and production evidence from the insured identifies that the production evidence (settlement sheets) supports 1,011 bu. The actual yield does change (1,000 bu. / 10 acres = 100 bu. actual yield vs. 1,011 bu. / 10 acres = 101.1 bu. which when rounded equals 101 bu. actual yield), but the average and approved APH yields do not change when the production is corrected, therefore, assigned yields do not apply.

(3) no assigned yield will apply when the actual yield certified for an APH crop year in an APH database(s) is within five percent of the actual yield determined from acceptable production evidence, and the total production for the crop for all APH databases in the applicable crop year, determined from acceptable production evidence, is within five percent of the certified total production for the crop; or

**Example:** The insured certified 10 acres and 1,000 bu. of corn on the production report. An APH review is conducted and production evidence (farm management records) from the insured supports 1,053 bu. The actual yield, average yield, and approved APH yield do change (1,000 bu. /10 acres = 100 bu. actual yield vs. 1,053 bu. /10 acres = 105.3 bu. which when rounded equals 105 bu. actual yield), but the difference determined in the actual yield does not exceed the five percent tolerance. All other APH databases certified production and acres for the crop do not exceed the five percent tolerance determined to be correct, then production is corrected for the crop and assigned yields do not apply.

(4) the insured underreports production on their production report in excess of the five percent tolerance.

If the insured underreports production on their production report, then the insured APH databases will be corrected according to the acceptable production evidence that is provided, unless any APH database for the same crop, was over-reported by more than the five percent tolerance provided in (3) above. If any APH database is over-reported by more than five percent, then the underreporting exception does not apply

**Example:** The insured has three APH databases and underreports their production on the production report, greater than the five percent tolerance. Since, the insured has underreported on their production report for each APH database and did not over-report production more than the five percent tolerance, then, the APH databases will be corrected and assigned yields will not apply.

**1598-1600 (Reserved)**

# PART 16

**1601-1700 (Reserved)**

**1601-1700 (Reserved)**

# PART 17 CATEGORY B CROP PROCEDURES
## Section 1 APH Database

### 1701 General Information

APH yield determination methods provide flexibility the initial year of insurance for insureds that do not furnish acceptable records. For insureds that provide less than four years of actual yields, variable T-Yields are used to complete four-year APH databases see Para. 1702A-B. When four or more years of actual yields are available in an APH database, T-Yields are not used. Insureds must provide production reports for subsequent crop years in accordance with the policy.

A minimum of four years of yields are required in each APH database to calculate approved APH yields. The following paragraphs contain instructions for establishing APH databases.

AIPs must transmit all active APH databases to RMA, regardless of whether such APH databases have acreage attached.

### 1702 Methods to Establish an APH Database

**A. No Actual or Assigned Yields**

(1) New insureds who have not produced the crop may qualify as a New Producer. See Section 5.

(2) New insureds who have produced the insured crop and do not provide acceptable production reports for the land in the insured's current operation by the PRD or provide production reports containing only zero-planted acres, approved APH yields are calculated by multiplying the applicable T-Yield(s) by 65 percent. If the insured crop was produced on entirely different land than contained in the current farming operation and the new insured does not provide acceptable production reports due to lack of acceptable supporting production evidence for such land, the new insured may request a RO determined yield. See Section 6 and Part 22.

(3) New insureds must request approved APH yields by completing and signing a Production Report. Separate four-year APH databases are required for each unit (by P/T and for each TMA). Each APH database must contain four 65 percent T-Yields. AIPs must quote the applicable 65 percent T-Yield as the preliminary yield. The verifier must approve all approved APH yields.

(4) APH databases must be updated each year with any actual or assigned yields and appropriate percentage of the variable T-Yield. The 65 percent variable T-Yield applies only one year, unless zero acreage of the crop is planted.

(5) OUs are not authorized see Para. 1024 for exceptions.

**B. Actual and/or Assigned Yields Provided**

When acceptable production reports containing actual yields are filed and/or assigned yields apply for a crop year, the crop year is counted for variable T-Yields purposes. APH databases with actual and/or assigned yields are established as follows:

**B. Actual and/or Assigned Yields Provided (continued)**

(1) Less than four years of actual/assigned yields. When less than four years of actual/assigned yields are available for an APH database, the average APH yield is determined by a simple average of the insured's actual/assigned yields and applicable variable T-Yields used to complete the four-year minimum APH database divided by four.

(2) Four or more years of actual/assigned yields. When four or more years of actual/assigned yields are available for an APH database the average APH yield is determined by a simple average of the insured's actual/assigned yields divided by the number of years of actual/assigned yields contained in the APH database.

**C. New Producer**

New producer determinations are made on a crop/county basis, which includes all types and practices (including certified organic and transitional) of the crop. A new producer is a person who has not been actively engaged in farming for a share of the production of the insured crop (producing the crop) in the county for more than two APH crop years. Insureds who have produced the insured crop for more than two APH crop years in other county(ies) qualify as a new producer of the insured crop if they have not produced the insured crop in the county for more than two crop years. See Section 5 for instructions to calculate an approved APH yield for persons qualified as a new producer.

**D. RO Determined Yields**

In certain situations, a RO determined yield may be requested by the insured through their AIP, see Section 6 and Part 22.

**E. Added Land/New Crop/P/T**

Variable T-Yields will be used for added land or new crop/P/T based on the years of actual/assigned yields for the insured crop and county unless the added land or new crop/P/T qualifies for use of the SA T-Yield or the insured qualifies to use another producer's production history to establish the APH database. See Part 17, Sections 9 and 10. Beginning with the 2017 crop year, SA T-Yields are applicable for certified organic and transitional practices when the criteria in Section 9 are met. Refer to SF APH database instructions in Part 11, Section 2 when a SF practice is carried out for the first time for Wheat, Barley, and Oats on the same unit as the CC practice has been carried out.

**F. Determined Irrigated Yields**

In lieu of the variable T-Yield, an AIP may approve a determined yield for an IRR practice the first time the IRR practice is carried out on a unit, if certain conditions are met. See Para. 1107 for instructions of when determined irrigated yields are available and all applicable calculations.

### G. High-Risk Land

Variable T-Yields do not apply to acreage with less than four years of actual/assigned yields that is located on high-risk or unrated land with high-risk T-Yields. One hundred percent of the high-risk T-Yield assigned applies. Use yield descriptor "F".

### H. Master Yields

A MY is an optional yield calculation method in addition to standard APH databases. Insureds that qualify for MY must request initial MY and provide the required documentation no later than the PRD. MY are available for select crops, practices, and locations. See Section 7 for MY procedures, crops and applicable locations (states).

### I. Acreage Emerging from an USDA Program, New Breaking, or Native Sod

See Section 8 for procedure to calculate an approved APH yield for acreage emerging from CRP, new breaking, and/or native sod acreage.

### J. Switching from an ARPI to a CCIP Policy

See Section 11 for procedure to calculate an approved APH yield when an insured switches from an ARPI policy to a CCIP policy.

### K. APH Database Requirements for PP Acreage when PP Payments are Limited

A yield will be assigned for APH database purposes, when the PP payment for the first insured crop for the previous crop year is limited to 35 percent of the PP coverage by the crop's policy. See Prevented Planting Standards Handbook for situations when PP acreage is not eligible for double cropping and limited to 35 percent of the PP payment. Separate yields must be assigned for each P/T/TMA requiring separate approved APH yields, see Para. 1714.

(1) Only the first insured crop's yield is affected when PP payments are limited, even if PP payments are based on another crop when sufficient eligible PP acres of the first insured crop are not available. For example, 200 acres PP corn claimed (first insured crop); however, corn had 150 eligible PP acres and 50 acres of the PP payment was based on soybeans. In this example, a yield for APH database purposes will be assigned for 200 acres of PP corn.

(2) If the unit contained only PP acreage on which the PP payment was limited, 60 percent of the applicable approved APH yield (for the unit/P/T/TMA) for the first insured crop on which PP was claimed will be assigned. Use the "PP" yield descriptor to identify the yield assigned for PP acreage. Such yields are not eligible for yield substitutions under the Yield Adjustment Election and they do not count as a year of actual yields for variable T-Yield and yield floor percentage determinations.

**K. APH Database Requirements for PP Acreage when PP Payments are Limited (continued)**

(3) If the unit contains both PP acreage on which the PP payment was limited and planted acreage of the first insured crop, the yield for the unit will be determined by:

(a) Multiplying the number of insured PP acres for the first insured crop by 60 percent of the applicable approved APH yield for the first insured crop;

(b) Adding the production assigned in (a) above to the amount of harvested and/or appraised production for planted acreage of the first insured crop; and

(c) Dividing the total production determined in (3) above by the total number of acres.

**Example:** 10 acres PP was planted to a second crop. The approved APH yield for the first insured crop was 100 bu./acre.

| | | | |
|---|---|---|---|
| 10 acres PP first Insured Crop | 15 Acres First Insured Crop Planted and Harvested | 10 x (0.60 x 100 bu./acre) | **600 bu.** |
| | | 15 acres harvested | **825 bu.** |
| | | Total bu. | **1425 bu.** |
| | | 1425 bu. ÷ 25acres | **57 bu./acre** |

(d) The total acres (PP on which the PP payment was limited and planted first crop acreage) and the weighted average yield (identified by PW yield descriptor) determined using the procedure above must be shown on the insured's Production Report and included in the APH database used to calculate the APH yield for the unit for the applicable P/T/TMA. APH entries for the example above are as follows:

Acres = 25.0; weighted average yield = PW 57.

(e) Such yields are eligible for yield substitutions under YA and exclusions under YE, and count as a year of actual yields for variable T-Yield and yield floor percentage determinations.

(4) If the PP payment is not limited to 35 percent of the PP coverage there is no effect on the APH database (PP acreage is not shown on the insured's production report and is not entered in the APH database used to calculate the approved APH yield).

### L. Approved APH Yield Reductions

See Part 15 Section 6 for APH yield reduction instructions. Approved APH yields calculated for a practice (including transitional and certified organic acreage), or type (P/T) of the insured crop, are required to be reduced for the following situations when they are discovered:

(1) Any reported actual yield identified as excessive requires an APH review by the AIP. Excessive actual yields are adjusted if the insured provides verifiable records that support the actual yield but cannot prove that there is a valid basis for the excessive yield.

If an insured does not provide verifiable records to support the excessive actual yield, the production reports for the crop year are not acceptable and are not used to calculate the approved APH yield. For carryover insureds, assigned yields will apply.

(2) Inconsistent approved APH yield when acreage limitations are exceeded.

(3) When a different production method likely to result in a lower yield than the production method upon which the approved APH yield is based are carried out for the crop year.

### M. Cups

A cup mitigates the effect of a catastrophic year on an approved APH yield by preventing it from decreasing by more than 10 percent compared to the prior year's approved APH yield and is only available for carryover insureds. See Part 15, Section 5.

### N. Yield Floors

The yield floor prevents the approved APH yields from declining below a certain percentage of the applicable T-Yield. See Section 4 of this part.

### O. APH Database Yield Adjustment

For APH database calculation purposes, insureds may substitute 60 percent of the applicable T-Yield (80 percent for BRF) for actual yields that are less than 60 percent of the applicable T-Yield to mitigate the effect of catastrophic years for low actual yields caused by drought, flood, or other natural disasters. See Part 15 Section 3.

### P. APH Yield Exclusion

For APH database calculation purposes, YE, allows the exclusion of an actual yield for a crop year when RMA determines the county per planted acre yield for the crop year was at least 50 percent below the simple average of the per planted acre yield for the crop in the county for the previous 10 consecutive crop years. See Part 15 Section 4.

**Q. APH Database Requirements for Acreage in Transition without an Organic Plan**

For acreage transitioning to organic, the insured must have an organic certificate, or written documentation from a certifying agent, indicating an organic plan is in effect. If the insured does have not an organic certificate or written documentation, the acreage cannot be insured under the transitional practice and must be insured under the conventional practice (See GSH Part 8 Section 4). Transitioning to organic without a plan is considered a change in production method.

When there is a change in production methods, the insured must report the change in production methods to the AIP. If the different production method is likely to result in a yield lower than the production method upon which the approved APH yield is based, the approved APH yield will be reduced to reflect the different production method. (See Para. 1592 for procedures to reduce approved APH yield due to different production methods). Any production from acreage transitioning without an organic plan will be insured under the conventional practice and a separate APH database established for such acreage.

(1) A separate APH database is established using the lower of the conventional APH database approved APH yield or the applicable T-Yield for the transitional practice when other APH databases do not exist for acreage transitioning without a plan.

(a) Use the APH Procedural Exception Code of "T" for APH databases for acreage transitioning without a plan. See Para. 1505E for more information regarding APH Procedural Exception Codes.

(b) Actual yields from organic production methods must be used to establish these APH databases identified with an APH Procedural Exception Code of "T" for acreage transitioning without an organic plan.

(c) When at least 4 APH crop years of actual yields from organic production methods are not available for an APH database, use variable T-Yield procedures to complete the APH database. Although these acres are being insured as a conventional P/T, the organic (transitional) T-Yield contained in the county actuarial documents is the applicable T-Yield. See Para. 1503 for variable T-Yield procedures.

**Exception**: In those instances when the conventional approved APH yield for the acreage is lower than the variable T-Yield, use the approved APH yield as an annual yield, identified with a F yield descriptor, to complete the APH databases identified with a "T" APH Procedural Exception Code.

If SA T-Yields apply, calculate SA T-Yields using all approved APH yields for existing APH databases containing one actual yield with the same organic production method identified with "T" APH Procedural Exception Code.

**Q. APH Database Requirements for Acreage in Transition without an Organic Plan (Continued)**

(2) For acreage transitioning without an organic plan that began transitioning prior to the 2017 crop year, continue to use an analysis database to determine whether the conventional approved APH yield should be reduced.

(a) Establish an analysis database:

(i) Use yields for transitional acreage for the same crop/practice/type/unit, as applicable.

(ii) Complete the analysis database with applicable variable T-Yields, if needed to complete four years in the database.

(iii) Calculate an average yield for the analysis database using any applicable yield limitations or adjustments.

(b) Compare the analysis database average yield to the conventional APH database approved APH yield:

(i) If the conventional approved APH yield is lower than the analysis database yield, the approved APH yield is not reduced.

(ii) If the analysis database average yield is lower:

- The conventional approved APH yield is reduced to the analysis database average yield.

- The AIP must report the conventional APH database to RMA with a yield limitation flag "11" if no yield limitations or adjustments, (substitutions) applies, or "12" or "13" if any applicable yield limitations or adjustments (substitutions) apply.

The analysis database is not transmitted by the AIP to RMA; however, it must be provided with any transfers by the insured to a different AIP.

(3) For acreage in transition to organic certification without an organic plan becomes certified organic prior to the 2017 crop year, the AIP must determine whether the approved APH yield for the certified organic acreage should be reduced for any acreage that was transitioned to organic certification without an organic plan.

(a) If the insured has four or more years of certified organic annual or assigned yields, the certified organic approved APH yield is not adjusted by the AIP.

**Q. APH Database Requirements for Acreage in Transition without an Organic Plan (Continued)**

(b) If the insured has less than four years of certified organic annual or assigned yields, the AIP must assure acreage that was in transition to organic certification without an organic plan, or written documentation in effect, from a certifying agent is accounted for in the organic APH database production history. The AIP must determine whether the approved APH yield for the certified organic APH database must be reduced.

(i) Establish an analysis database for the same crop/unit/P/T, as applicable:

- use any certified organic annual yields;
- annual yields from the transitional acreage (without an organic plan or written documentation from a certifying agent indicating an organic plan is in effect) in the most recent four APH crop years;
- complete the analysis database with variable T-Yields, as applicable to complete the analysis database; and
- determine the analysis database yield with any applicable yield limitations or adjustments.

(ii) When the analysis database's approved yield is lower, the certified organic APH database approved APH yield is reduced to the analysis database approved yield.

(iii) If the approved APH yield is reduced, the AIP must report the APH database to RMA with a yield limitation flag "11" if no yield limitations or adjustments, (substitutions) applies, or "12" or "13" if any applicable yield limitations or adjustments (substitutions) applies.

The analysis databases are used by the AIP to determine whether the certified approved APH yield should be reduced. The analysis database should not be transmitted by the AIP to RMA; however, it must be provided with any transfers by the insured to a new AIP.

The AIP must continue to use the analysis database until four years of certified organic history is obtained. See prior issuances of CIH for examples of analysis APH databases.

**R. APH Database Requirements for Certified Organic or Transitional Acreage Affected by Prohibited Substances**

If transitional or certified organic acreage is affected by a prohibited substance (See GSH for information on prohibited substances) for Category B crops:

(1) before the ARD, the production from the affected acreage will be added to the conventional APH database; or

(2) after the ARD, the crop is insurable as it was reported and the production from the affected transitional acreage will be added to the transitional APH database and the production from the affected certified organic acreage will be added to the certified organic APH database.

For the following crop year, if the certifying agent does not issue an organic certificate for the acreage affected by a prohibited substance, the acreage cannot be insured under the organic practice. The insured may transition the acreage toward organic certification or return to conventional farming practices. See Exh. 17 for example.

**1703-1706 (Reserved)**

## Section 2 T-Yields

### 1707 General Information

If less than four years of actual and/or assigned yields are available in an APH database (unit/P/T/TMA), the APH database is completed with a variable T-Yield based on the number of years of actual and/or assigned yields available for the crop in the county see Para. 1503. T-Yields contained in carryover insureds' APH databases must be replaced with the current crop year's T-Yields.

### 1708 T-Yield Methods

T-Yields are published in the actuarial documents. The T-Yields will be used to calculate variable T-Yields by crop and county, when necessary to calculate approved APH yields. T-Yields are established by the following.

**A. Insurable P/Ts**

Separate approved APH yields are required for each P/T in the actuarial documents. Separate APH databases must be established for each P/T. See Part 19 for individual crop instructions.

**Exception:** Refer to Part 11 Section 3 for establishing APH databases for corn, cotton, and grain sorghum when skip-row practice is applicable.

**B. Map Areas**

In addition to P/T, T-Yields may be assigned for certain areas within a county TMA. Acreage located in TMA with different T-Yields or having a different T-Yield requires separate APH databases.

For units located in more than one TMA (except for land assigned a High-Risk T-Yield), the variable T-Yield is determined by the number of years of actual and/or assigned yields provided for the crop and county. Separate APH databases are not required for maps used only to assign rates (including areas with high-risk rate adjustment factors that have not been assigned separate (different) T-Yields).

### C. High-Risk Land

The actuarial documents may indicate high-risk rate adjustment factors and assign high-risk T-Yields to high-risk land (generally identified as AAA, BBB, or CCC on the actuarial documents) via a T-Yield Map. RMA may also assign high-risk T-Yields to unrated land by WA.

When high-risk T-Yields are used to complete a four-year database, they are not reduced by the variable T-Yield percentage if less than three years of actual and/or assigned yields are available for the crop. Separate APH databases are required and must be maintained for land with high-risk T-Yields. High-risk T-Yields are preceded by the yield descriptor "F" when used to calculate the approved APH yield.

### D. Transitional and Certified Organic Practices

Beginning with the 2017 crop year, actual yields from transitional APH databases may no longer be used to complete the certified organic APH database when establishing APH databases. For certified organic acreage with less than four years of actual/assigned yields, the applicable T-Yields for the certified organic practice are used to complete the certified organic APH database when establishing an APH database. This is not retroactive to certified organic APH databases established in prior crop years. Transitional actual yields (identified with yield descriptor “G”) used to establish certified organic APH databases in prior years will remain in such APH databases until they roll out (i.e., 4 or more years of actual certified organic yields become available for the APH database). See Exh. 17 for example.

For acreage in transition to organic with less than four years of actual/assigned yields, applicable T-Yields for the transitional practice are used to complete the transitional APH database when establishing APH databases. See Para. 1702 P for procedures related to transitioning to organic without an organic certificate, or written documentation from a certifying agent, indicating an organic plan is in effect.

**1709-1712 (Reserved)**

## Section 3 Reporting Production for P/T/TMAs

### 1713 Applicability

Production must be reported by P/T/TMAs, including land with different high risk T-Yields, indicated by the actuarial documents.

### 1714 Separate Production

A yield must be determined for each P/T/TMA by establishing a separate APH database using the separated acres and production. An APH database established for one P/T/TMA may not be duplicated to establish an APH database for a different P/T/TMA.

### 1715 Separating Commingled Production

When production for P/T/TMAs has been commingled, separate production must be determined for each P/T/TMA by the following.

**A. Recertification**

The insured provides a yield by P/T/TMA from past production records, accounts for total disposition, and the verifier considers resulting yields reasonable.

**B. Apportionment**

The production is apportioned using the Multi-Purpose Production and Yield Report Worksheet by following the Multi-Purpose Production and Yield Worksheet instructions, see Exh. 17.

**C. Proration**

The production is prorated when the T-Yields for the P/Ts are the same and the insured is unable to provide a yield estimate and the acreage of the P/Ts is known. Production is prorated by:

(1) dividing the total commingled production by the total planted acres from which the commingled production was harvested; and

(2) then multiplying the resulting average yield times the acres of each P/T.

The prorated production, planted acres and average yield, is entered in the APH database.

Identify prorated production with the “PA” yield descriptor.

## D. Attribution

When production has been commingled between P/T/TMAs and the production cannot be separated using one of the methods above, the total acreage and production will be attributed to the P/T/TMA with the highest published T-Yield.

If the published T-Yields are the same, attribute the total acres and production to the highest yielding practice as designated by RMA (e.g., irrigated if irrigated and non-irrigated practices; SF, if SF and CC practices; spring wheat, if spring and durum wheat types; winter wheat, if spring and winter types production was commingled).

For each APH crop year reported (2018, 2017 etc.) that acreage and production must be attributed to the highest yielding P/T/TMA, determine the annual yields for P/T/TMAs with lower T-Yields as follows:

**Step 1:** Divide the lower T-Yield published for the P/T/TMA by the highest P/T/TMAs published T-Yield, whichever is applicable, to determine a percentage factor (round to two places).

**Example:** The production for 2018 for the irrigated and non-irrigated practices was commingled. The non-irrigated T-Yield is 90 and the irrigated T-Yield is 160: 90/160 = 0.56.

If the T-Yields are the same, the factor will be 1.0.

**Step 2:** Multiply the percentage factor determined in Step 1, times the approved APH yield determined for the P/T/TMA to which the acreage and production was attributed. The determined yield will not exceed the T-Yield published for the lower applicable P/T/TMA.

**Example:** If the approved APH yield using the acres and production attributed to the practice with the highest T-Yield (irrigated) is 140, using the factor determined in Step 1, the determined yield for the non-irrigated practice would be 78 (140 X .56).

If the T-Yields are the same, the determined yield will be the approved APH yield for the highest yielding P/T if lower than the lower yielding P/T's variable T-Yield.

**Step 3:** Enter the determined yield in the yield column of the APH database, identified by the yield descriptor "F" and calculate the approved APH yield following the applicable crop procedure. If the T-Yield changes in a subsequent crop year, determined yields calculated correctly for a previous crop year are not recalculated.

### E. Commingled Organic Production

Separate production reports and records are required for certified organic and acreage transitioning to certified organic. For APH purposes, if the commingled production for Category B crops is from the:

(1) conventional acreage and certified organic or acreage transitioning to certified organic, the production is considered conventional and the yield data must be added to the conventional APH database.

(2) certified organic acreage and acreage transitioning to certified organic, the production is considered transitional and the yield data must be added to the transitional APH database.

The Multi-Purpose Production and Yield Worksheet cannot be used to separate production between certified organic, transitional, and conventional practices

**1716-1720 (Reserved)**

## Section 4 Yield Floors

### 1721 General Information

Yield floors are yield limitations designed to mitigate the effect of catastrophic years on approved APH yields. Apply yield floors by APH database, and only APH databases with at least one actual or assigned yield are eligible.

Yield floors are applicable to additional coverage policies for new and carryover insureds. When applicable, the approved APH yield will not fall below the yield floor. The yield floor is a percentage of the applicable T-Yield based on the number of years of records the insured has provided for the crop and county, as provided in the following chart.

| MAXIMUM YIELD FLOOR PERCENTAGE OF APPLICABLE T-YIELD | YEARS OF RECORDS | | |
|---|---|---|---|
| | 1 YEAR | 2 - 4 YEARS | 5 OR MORE YEARS |
| 80% | 70% OF T-YIELD | 75% OF T-YIELD | 80% OF T-YIELD |
| 90% OPTION* | 80% OF T-YIELD | 85% OF T-YIELD | 90% OF T-YIELD |
| 100% OPTION* | 90% OF T-YIELD | 95% OF T-YIELD | 100% OF T-YIELD |

### 1722 Yield Floor Calculations

For qualifying APH databases, approved APH yields are calculated using yield floors as follows, see Exh. 17.

(1) Calculate the average APH yield using current APH procedures.
(2) Calculate the yield floor.
(3) Determine the preliminary yield (and subsequent approved APH yield):

### 1723 Determining Premium Rates

Premium rates are determined differently when the approved APH yields are based on yield floors. Rates are determined as follows when the approved APH yield is subject to the rate determined from the average yield; however, guarantees are based on the yield floor. The AIPs must identify the APH database with the appropriate yield limitation flag when transmitting to RMA. See Appendix III.

### 1724-1730 (Reserved)

*Pilot available for some crops only in Minnesota, North Dakota and South Dakota (must be elected on a crop/county basis by the applicable SCD and is continuous until canceled). Applicable option surcharge applies only to those APH databases where the yield floor is the approved APH yield.

## 1731 New Producer Qualifications

To be a new producer, the insured must not have produced the insured crop in the county for more than two APH crop years.

### A. Producing the Insured Crop

Producing the insured crop means actively engaged in farming for a share of the insured crop's production in the county or being a SBI holder to a person who is actively engaged in farming for a share of the insured crop's production in the county.

If a crop is planted and insurable, then it is considered producing the insured crop for new producer purposes. For example, it is considered a year of producing the insured crop when an insured plants corn for grain and subsequently harvests corn for silage, or an insured plants wheat for grain and then short-rates the acreage.

Producing the insured crop does not include when the crop is planted in such a way that it would not be an insurable crop. However, acceptable production reports for the uninsurable production must be provided for the insured to be determined a new producer, even if the uninsurable production was from a prior crop year(s) when the insured did not have insurance on the crop. For example, it is not considered a year of producing the insured crop when wheat is planted with the intent of haying or grazing or a silage-only type of corn is planted for silage in a grain-only county.

### B. Produced the Insured Crop in Other Counties

Insureds who have produced the insured crop for more than two APH crop years in other county(ies) may qualify as a new producer of the insured crop when they have not produced the insured crop in the county for more than two APH crop years.

### C. New Person Type Formation

Formation of a new person (business entity such as a corporation, partnership, trust, etc.) comprised of one or more persons does not automatically qualify the person as a new producer. Although the person may not have produced the insured crop, SBI holders comprising the person may have produced the insured crop in the county.

(1) When the SBI holders and the new person have produced the insured crop for two APH crop years or less, the new person may qualify as a new producer if:

(a) the insured crop was produced on land currently operated by the new person and production reports are filed for those APH crop year(s).

**C. New Person Type Formation (continued)**

The approved APH yield is calculated using the actual yields from the production reports and 100 percent of the applicable T-Yield, identified with the yield descriptor "I".

(b) the insured crop was produced on land that is NOT operated by the new person and production reports are filed for those APH crop year(s).

The approved APH yield is calculated using 100 percent of the applicable T-Yield, identified with the yield descriptor "I".

However, if production reports are not filed for all of those APH crop year(s) for the insured crop, regardless of whether that land is operated by the new person, the approved APH yield is calculated using the variable percentage of the applicable T-Yield based on the number of years of production reports filed, if any.

(2) When the SBI(s) of the new person and the new person has produced the crop more than two APH crop years, the new person does not qualify as a new producer.

(a) If the insured crop was produced on land currently operated by the new person and the insured files production reports for those APH crop year(s), the approved APH yield is calculated using the actual yields and 100 percent of the applicable T-Yield, identified with the yield descriptor "T", to complete the 4-year APH database.

(b) If the insured crop was produced on land that is not operated by the new person and the insured files production reports for those APH crop year(s), the approved APH yield is calculated using 100 percent of the applicable T-Yield, identified with the yield descriptor "T", to complete the 4-year APH database.

The number of years for which production reports are filed must be included in the Actual Yield Year Count on the yield record transmitted to RMA.

(c) If production reports are not filed for all of those APH crop year(s) for the insured crop, regardless of whether that land is operated by the new person, the approved APH yield is calculated using the variable percentage of the applicable T-Yield based on the number of years of production reports filed, if any.

**D. Dissolution of Persons**

Dissolution of a business entity, such as a corporation, partnership, trust, etc., comprised of one or more persons does not automatically qualify the person(s) previously involved in the business entity as new producers. If:

(1) when the SBI holders and the new person have produced the insured crop for two APH crop years or less, the new person may qualify as a new producer if:

**D. Dissolution of Persons (continued)**

(a) the insured crop was produced on land currently operated by the new person and production reports are filed for those APH crop year(s).

The approved APH yield is calculated using the actual yields and 100 percent of the applicable T-Yield, identified with the yield descriptor "I".

(b) the insured crop was produced on land that is NOT operated by the new person and production reports are filed for those APH crop year(s).

The approved APH yield is calculated using 100 percent of the applicable T-Yield, identified with the yield descriptor "I".

However, if production reports are not filed for all of those APH crop year(s) for the insured crop, regardless of whether that land is operated by the new person, the approved APH yield is calculated using the variable percentage of the applicable T-Yield based on the number of years of production reports filed, if any.

(2) when the SBI(s) of the new person and the new person have produced the crop more than two APH crop years, the new person does not qualify as a new producer.

(a) If the insured crop was produced on land currently operated by the new person and the insured files production reports for those APH crop year(s), the approved APH yield is calculated using the actual yields and 100 percent of the applicable T-Yield, identified with the yield descriptor "T", to complete the 4-year APH database.

(b) If the insured crop was produced on land that is not operated by the new person and the insured files production reports for those APH crop year(s), the approved APH yield is calculated using 100 percent of the applicable T-Yield, identified with the yield descriptor "T", to complete the 4-year APH database.

The number of years for which production reports are filed must be included in the Actual Yield Year Count on the yield record transmitted to RMA.

(c) If production reports are not filed for all of those APH crop year(s) for the insured crop, regardless of whether that land is operated by the new person, the approved APH yield is calculated using the variable percentage of the applicable T-Yield based on the number of years of production reports filed, if any.

**E. Existing Persons**

Although an existing business entity may not have produced the insured crop previously in the county, SBI holders comprising the entity may have produced the insured crop in the county previously, which may affect the new producer status of the existing business entity.

**E. Existing Persons (Continued)**

(1) When the SBI holders and the new person have produced the insured crop for two APH crop years or less, the new person may qualify as a new producer if:

(a) the insured crop was produced on land currently operated by the new person and production reports are filed for those APH crop year(s).

The approved APH yield is calculated using the actual yields and 100 percent of the applicable T-Yield, identified with the yield descriptor "I".

(b) the insured crop was produced on land that is NOT operated by the new person and production reports are filed for those APH crop year(s).

The approved APH yield is calculated using 100 percent of the applicable T-Yield, identified with the yield descriptor "I".

However, if production reports are not filed for all of those APH crop year(s) for the insured crop, regardless of whether that land is operated by the new person, the approved APH yield is calculated using the variable percentage of the applicable T- Yield based on the number of years of production reports filed, if any.

(2) When the SBI(s) of the new person and the new person has produced the crop more than two APH crop years, the new person does not qualify as a new producer.

(a) If the insured crop was produced on land currently operated by the new person and the insured files production reports for those APH crop year(s), the approved APH yield is calculated using the actual yields and 100 percent of the applicable T-Yield, identified with the yield descriptor "T", to complete the 4-year APH database.

(b) If the insured crop was produced on land that is not operated by the new person and the insured files production reports for those APH crop year(s), the approved APH yield is calculated using 100 percent of the applicable T-Yield, identified with the yield descriptor "T", to complete the 4-year APH database.

The number of years for which production reports are filed must be included in the Actual Yield Year Count on the yield record transmitted to RMA.

(c) If production reports are not filed for all of those APH crop year(s) for the insured crop, regardless of whether that land is operated by the new person, the approved APH yield is calculated using the variable percentage of the applicable T-Yield based on the number of years of production reports filed, if any.

**F. A Previous or Current SBI Holder of a Business Entity**

(1) If a person previously held or continues to hold an SBI in a business entity that produced the insured crop in the county for two APH crop years or less, the person may qualify as a new producer if:

(a) production reports are filed for those APH crop year(s) for the insured crop on land that is operated by the business entity, the approved APH yield is calculated using the actual yields and 100 percent of the applicable T-Yield, identified with a yield descriptor of "I".

(b) production reports are filed for those APH crop year(s) for the insured crop on land that is NOT operated by the new person, the approved APH yield is calculated using 100 percent of the applicable T-Yield, identified with a yield descriptor of "I".

(2) When the business entity of which a person is a current or previous SBI holder has produced the insured crop more than two years, the person does not qualify as a New Producer.

(a) If the insured crop was produced on land currently operated by the person, the insured must file production reports for those APH crop year(s). The approved APH yield is calculated using the actual yields and 100 percent of the applicable T-Yield, identified with the yield descriptor "T", refer to Para. 1509.

(b) If the insured crop was produced on land that is not operated by the person and production reports are filed for those APH crop year(s). The approved APH yield is calculated using 100 percent of the applicable T-Yield, identified with the yield descriptor "T". The number of years for which production reports are filed must be included in the Actual Yield Year Count on the yield record transmitted to RMA to ensure the appropriate percentage of the variable T-Yield is used in calculation of the approved APH yield.

(c) If production reports are not filed for all of those APH crop year(s) for the insured crop, regardless of whether that land is operated by the new person, the approved APH yield is calculated using the variable percentage of the applicable T-Yield based on the number of years of production reports filed, if any.

**G. Insuring a Landlord/Tenant's Share**

If either the landlord or tenant has new producer status for a crop prior to establishing the landlord/tenant arrangement and the other party, either the tenant or landlord, does not qualify as a new producer, the new producer status is not retained.

**G. Insuring a Landlord/Tenant's Share (Continued)**

**Example:** Tenant A and Landlord B – Tenant A has 200 acres of cotton and qualifies as a new producer. Landlord B has been growing cotton in the county for 10 years. In 2019, Tenant A insures Landlord B's share on 50 acres of cotton. Since Landlord B does not qualify as a new producer of cotton, Tenant A can no longer retain his new producer status for cotton.

## 1732 Deadline

The deadline for documenting new producer status is the PRD.

**Exception:** If the agent fails to correctly identify a new insured as a new producer, the error, subject to the AIP's approval, may be corrected up until the ARD.

## 1733 Verification

AIPs must verify new producer status no later than APH database establishment. Use of RMA-provided systems, PHTS and CIMS, are sufficient for underwriting purposes to provide reasonable assurance of the accuracy of an insured's certification of new producer status.

Although there is no time limit as to when the crop was produced, AIPs are not responsible for searching for years outside of those contained within RMA systems. AIPs may use additional means to verify new producer status when warranted. However, if it is later determined that the insured did not qualify as a new producer, then the policy must be corrected.

## 1734 Documentation

AIPs must:

(1) maintain documentation substantiating the determination of new producer status in the insured's file. Supporting documentation may include underwriting verification from available RMA-provided systems, documents or phone logs of conversations from county FSA offices, etc.

(2) obtain new producer certification from the insured, only the initial year new producer status is requested by the insured.

## 1735 Approved APH Yield Determination

If the insured qualifies as a new producer, the approved APH yield must be determined using the method below for which the insured qualifies.

**A. New Producers Who Have Not Produced the Crop Previously in the County**

(1) If no production records are available due to not planting the insured crop, the applicable T-Yield (100 percent) is the approved APH yield.

(a) APH databases must be established that contain four 100 percent applicable T-Yields identified with the yield descriptor code "I".

(b) OUs are allowed, provided they are requested by the ARD and the insured keeps separate records of acreage and production for each proposed OU for the current crop year.

(2) If sharing in the insured crop for the current crop year with another person(s), new producers may file acceptable production reports by the PRD based on acreage and production records obtained from the other person(s). If so, standard APH database procedures apply.

**B. New Producers Who Have Produced the Crop for One or Two Crop Years**

Production reports are required for new producers who produced the insured crop for one or two APH crop years for such crop years.

(1) Production reports must be provided for such crop years to qualify for use of the applicable T-Yield(s) (100 percent). If provided, the approved APH yield is calculated by dividing the sum of the actual yield(s) and the 100 percent T-Yields by four. If the required production reports are not filed the initial year the APH database is established, the approved APH yield is calculated using:

(a) 65 percent of the applicable T-Yield, if no production reports are provided. See Section 1.

(b) One actual yield and three 80 percent applicable T-Yields if only the most recent crop year is provided and the insured has produced the insured crop two years. See Para. 1503.

(2) OUs are determined according to the production reports filed for the previous APH crop year.

**Example:** The insured started farming in 2017 and produced the insured crop in 2017 and 2018. In this instance, the insured qualifies as a New Producer but must provide production reports for the insured crop for the 2017 and 2018 crop years to use the 100 percent of the applicable T-Yield in the APH database calculation.

If the insured had also produced the insured crop prior to the 2017 crop year, the insured would not qualify as a new producer.

## 1736 Added Land and New Crop P/T APH Database

If added land or a new crop/P/T is added and the insured still qualifies as a new producer for the crop/county, set up the new APH database(s) according to:

(1) new producer procedures; or
(2) added land and new crop/P/T APH database procedures, see Sections 9 and 10.

## 1737 For Subsequent Crop Years

Production reports must be provided by the PRD. If acceptable production reports are not provided by the PRD:

(1) assigned yield provisions apply;

(2) T-Yields are then determined using variable T-Yields based on the number of actual/assigned yield(s) for the crop/county; and

(3) OUs are not allowed.

Yield limitation provisions, cups and yield floors, apply as appropriate. Once three years of actual, assigned, and/or temporary yields have been provided for the crop/county, the "I" yield descriptor code is discontinued. "I" yield descriptor codes must then be removed and replaced with T-Yield descriptor codes, even if the three years of annual yields are not applicable on an APH database.

**Example:** Unit 0001-0000 planted in crop years 2016, 2017, 2018, with three actual yields. Unit 0002-0000 has never been planted. In crop year 2019 the "I" are removed from unit 0002-0000 and replaced with 100 percent T-Yield "T".

**Example:** The insured is a new producer in 2015, unit 0001-0001 has only short-rated wheat in crop years 2016, 2017, 2018 and unit 0001-0002 is never planted. Because short-rated wheat is considered producing the crop, even though production is not harvested, each year all of the wheat acreage is short-rated, a "Q" is added to the APH database since there is no actual production on the short-rated acreage. In 2019, the "I"s are removed from the APH databases for both unit 0001-0001 and 0001-0002 and replaced with 100 percent T-yield "T".

## Section 6 RO Determined Yields

### 1738 General Information

RO Determined Yield Requests may be submitted for the following situations:

(1) variable T-Yield exceptions, when the insured (or SBI of the insured) has:

(a) produced the crop on a farming operation for more than two crop years, stopped farming ALL land in that farming operation, and has produced the crop on entirely different land for two APH crop years or less in the county; or

(b) has NOT produced or shared in the crop in the county in the most recent 10 calendar years preceding the current crop year (11 calendar years for crops with a lag year).

(2) MYs, as provided in Section 7; or

(3) Other situations authorized by RMA in policy or procedure.

A person may qualify for OUs based on intent to maintain separate acreage and production records according to OU provisions. See Part 22 for additional procedures for RO Determined Yields.

### 1739 Verifier Responsibilities

Verifiers must provide approved APH yields timely. For RO Determined Yields:

(1) AIPs must notify each affected insured of the approved APH yield(s) no later than 25 calendar days after issuance of the approved APH yield by the RO;

(2) the AIP will notify the insured of the approved APH yield(s) by:

(a) certified mail (return receipt requested); or

(b) an alternative method where the date the insured was notified and the method used is clearly documented; and

(3) documentation of the date the insured was notified of the approved APH yield must be available to verify timely notification of approved APH yields.

### 1740-1746(Reserved)

## 1747 General Information

MYs are available for some crops and locations authorized by RMA where crop rotation and land leasing practices limit the APH crop years of yield history available on individual units and APH databases, see Exh. 17. MYs are not applicable for CAT policies.

To establish the approved APH MY for all acreage of the crop planted in the designated MY area(s), data from all acreage of the crop the operator has in the county (identified by unit and by P/T, and TMA, as shown on the actuarial documents) are used. When a crop is approved for MY, all types and practices (including certified organic and transitional) of that crop are approved for MYs in an approved location. The same policy (crop and county) shall not contain a combination of MY(s) and approved APH yields (calculated by using standard APH database procedures).

**Exception:** MYs do not apply to any acreage emerging from a USDA program (such as CRP, etc.), new breaking acreage the initial year of planting, or native sod acreage during the first four crop years of planting. Establish this acreage with an APH database as provided in section 8; however, MYs will continue to apply to all other APH databases for the crop in the county. In subsequent crop years, the emerging USDA program acreage, new breaking acreage, or native sod acreage must be combined with the MY for the crop/county.

**Exception**: MYs do not apply to an APH database utilizing a different production method requiring the approved APH yield to be adjusted according to Para. 1592C. The MYs will continue to apply to all other APH databases for the crop in the county.

**Exception:** MYs do not apply to any acreage transitioning to organic without an organic plan or written documentation from an organic certifying agent.

The approved MY (by P/T) applies to all individual units within the MY area at a minimum on a policy basis unless otherwise authorized by a RO. Units with four or more years of records also use the MY (by P/T) as the approved APH yield. In addition, SA T-Yield procedure for added land or new crop/P/T APH Databases is not applicable where MYs are available.

When MY is elected, all APH databases, individual and MY summary APH databases, must be transmitted to RMA.

## 1748 Initial MY Approval Authorities

Initial training is mandatory for an AIP to approve MYs. A minimum of one representative per AIP must attend initial training from any RO to approve MYs for any region. RMA may also require additional update training in some instances.

### A. Referral of the MY Request

Referral of the MY request to the RO for approval is required when:

(1) RMA withdraws an AIP's authority to calculate initial MYs based upon an inordinate number of MYs calculated incorrectly;

(2) AIPs elect not to be responsible for the approval of initial MYs; and

(3) the request is to transfer a MY (see Para. 2211):

(a) to an adjacent county; or
(b) to person(s) who participated in the creation of a MY credited to another person.

### B. AIP Approval of Initial MYs

AIPs may approve initial MYs for the crops and locations listed below following successful completion of RMA approved training. See Exh. 17C for applicable crop approval locations.

| Crop | Location | Approval |
|---|---|---|
| Alfalfa Seed | all locations | approved for MYs |
| Canola/Rapeseed | all locations | approved for MYs |
| Dry Beans and Contract Seed Beans | all locations | approved for MYs |
| Dry Peas | all locations | approved for MYs |
| Green Peas | all locations | approved for MYs |
| Onions | all locations | approved for MYs, except Colorado |
| Potatoes | all locations | approved for MYs, except Texas |
| Processing Beans | all locations | approved for MYs |
| Safflower | Idaho | approved for MYs |
| Sugar Beets | all locations | approved for MYs |
| Sweet Corn - Processing | all locations | approved for MYs |
| Tomatoes - Fresh Market | limited to California | approved for MYs |
| Tomatoes - Processing | all locations | approved for MYs |

## 1749 Deadlines

The request for MYs must be signed by insured and received by the following deadline:

(1) For AIP approved Initial MYs, the AIP verifier must receive the RO Determined Yield Request and supporting documentation no later than 30 calendar days after the PRD. If received after the deadline, the AIP will reject the request and determine the approved APH yield using standard APH database procedures.

(2) For RO approved Initial MYs, the RO Determined Yield Request and supporting documentation must be received by the RO no later than 30 calendar days after the PRD.

(a) If the RO receives the request after the deadline, the RO will not accept the request and the AIP must establish the approved APH yield using standard APH database procedures.

(b) The RO will document late requests for subsequent review to assure that the AIP established approved APH yields using standard APH database procedures.

## 1750 General Information

If the approved initial MY is at least 95 percent of the preliminary MY, the initial MY is binding. If the approved initial MY is less than 95 percent of the preliminary MY, mutual consent cancellation or reconsideration provisions are applicable, see GSH Para. 833.

If a preliminary MY was not quoted by the agent, or if the insured's intentions are not clearly documented, the RO/AIP will return the MY request unapproved. Approved APH yields calculated under standard APH database procedures will then apply.

## 1751 Cancelling MYs

Once MYs are approved, insureds may not switch to standard APH databases, unless the insured cancels the MY in writing on or before the cancellation date for the insured crop.

When cancelling MYs, all years of the production history contained in the MY that can be attributed to the insured's farming operation under standard APH database procedures must be used (landlord may have to recertify actual yields for his or her own farming operation if the MY was established on an operator basis). Cups will not apply.

When switching back to standard APH databases, any APH database with fewer than four years of actual/assigned yields will use variable T-Yield procedures to complete the APH databases, SA T-Yields will not apply.

Previously approved MYs are retained if the policy is transferred and a break in continuity of insurance does not occur, the operator remains the same, and the MY is not canceled.

## A. Operator

MYs are established on an operator basis.

(1) Operator is described as the individual with the largest insurable interest in the crop.

(a) If the operator shares in other persons, the same MY must be used for all persons in which he or she is the operator and insures under separate policies. For example, an operator who has a majority share in multiple policies cannot choose to insure some policies under MY and some policies under standard APH databases.

(b) If two or more equal interests are involved, the operator is the individual who makes the daily farm management decisions regarding the crop. If two or more individuals have equal interests and make daily farm management decisions equally, they will be considered to be operating jointly and will have one combined MY. Farm management decisions begin with land selection and continue through harvest.

(c) If the policy covers land farmed by more than one operator, a separate MY must be established for each operator (such as the insured is a landlord on some land and an operator on other land, or is a landowner with multiple operators).

(d) The operator for each MY must be denoted on the APH database (in the block indicating the insured's name and address) to indicate the MY has been established on an operator basis.

(e) The MY determined for the operator also applies to insured landlord(s) involved in that farming operation except for a landlord that has CAT coverage or other acreage on which a MY is not applicable. A copy of the operator's MY or a MY with the operator's history must be placed in the landlord's file.

(2) All initial MYs for insureds sharing in the crop (companion contracts) must be reconciled using the following guidelines prior to issuing approved MYs.

(a) An insured sharing in the crop with an operator who has an approved MY will have his or her production guarantee(s) based on the operator’s MY if the insured has the operators permission and has timely requested a MY. Landlords that share rent land to multiple operators for the same crop must have MYs by operator on all land for the crop or it must remain a standard APH database.

(b) An insured sharing in the crop with an operator who has an approved MY will have his or her production guarantee(s) based on standard APH database procedures unless a timely request for a MY was made.

(c) A person sharing in the crop with an operator who does not have an approved MY may request an initial MY from the verifier by the PRD. However, AIPs must forward the required information to the RO for approval.

## 1752 Requirements for Establishing Initial MY(s) (Continued)

### A. Operator (continued)

(d) If the operator's (whose records were used to calculate the approved APH yield) status as an operator changes after the PRD, the approved MY may be used for that crop year; however, it must be recalculated for the following crop year. An operator's status changes if the operator rents/leases land to another person who qualifies as the operator. Persons who may continue to use the MY include:

(i) a landlord with an approved MY based on an operator's records whose status changed; or

(ii) an operator whose status changed but continues to have an insurable interest in the crop. (A processor that has 100 percent interest in the crop may not use the landowner's or laborer's records.)

(e) Transfer of APH database history for MYs (see CSH for MYs in another county).

### B. Previous Crop Years

MYs approved for previous crop year(s) that were not established on an operator basis, may be converted to an operator basis if requested timely by the insured.

### C. Approved By Verifier

The verifier must establish and approve MYs for each:

(1) P/T/TMA, as indicated in the actuarial documents; and
(2) RO Designated Homogeneous MY areas.

## 1753 Production Reporting Requirements

Individuals requesting initial MYs must furnish at least the four most recent APH crop years of continuous production reports (that contain actual and/or assigned yields for each crop year) for the crop, by county, within the base period. Insureds under standard APH database the previous year who request initial MYs must use all previously certified yield history that is still within the base period, see Part 15 Section 1.

Insureds with an approved MY for a crop who begin farming the crop in an adjoining county may request a MY for the crop in that county from the RO. Records from other entities sharing in the crop on the same land with the operator may be used to meet the four-year record requirement with RO approval. However, APH history transferred from another producer (not currently sharing in the crop) cannot be used in the establishment of a MY.

## 1753 Production Reporting Requirements (continued)

### A. Production Report

For the most recent APH crop year in the APH database, the insured must complete and sign a production report for each unit (by BU or OU) and by TMA (when applicable) on which the crop was grown. For such locations (legal descriptions), report acreage and production separately by P/T when indicated on the actuarial documents. Production reported for the most recent APH crop year determines whether the insured qualifies for BU or OU.

### B. Land Variance

Different parcels of land are often leased from year to year; therefore, units may not correspond for all reported years in the APH database. However, the insured must report all planted acres and production for each APH crop year.

(a) For APH crop year(s) previous to the most recent APH crop year, acreage and production must be reported separately by P/T (when indicated in the actuarial documents) and by location (legal description) when TMAs are involved.

If production is commingled between multiple TMAs, but the acreage within the TMA can be identified, the production must be apportioned to the respective acreage (by P/T) using the Multi-Purpose Production and Yield Worksheet, see Exh. 17, and the applicable T-Yields.

(b) If for APH crop year(s) previous to the most recent APH crop year, production is commingled between multiple TMAs and the acreage for the respective TMA (by P/T) cannot be identified, all production and acreage shall be attributed to the highest yielding map area (by P/T).

(c) MY Summary(ies) are compiled using the above acreage and production history, see Exh. 17.

## 1754 Establishing a MY

### A. Agent Responsibilities

Agents must complete a MY Summary APH database(s) that summarizes for each APH crop year the planted acres and production for each P/T and by location when TMAs are involved.

If it is an initial MY request, agents must quote Preliminary MYs from the MY Summary APH Database(s). Agents must also quote a preliminary APH yield using standard APH database procedures for comparison purposes.

**A. Agent Responsibilities (continued)**

(1) Agents must review the preliminary APH yield calculated using standard APH database procedures and the preliminary MY with the insured. The insured must select the method (either standard APH database or the MY APH database) to be used to calculate the approved APH yield.

(2) The agent must obtain the insured's signature on the MY Summary APH Database in the Insured's Signature Block. The summary must indicate either acceptance of the preliminary MY, or voidance of the request. If the insured wishes to void the request a statement must be added that indicates, "The MY is declined and the approved APH yield will be based on Standard APH databases".

(3) The agent forwards the MY Summary APH database(s), all individual unit APH database(s) and supporting documentation to the AIP.

**B. Verifier Responsibilities**

(1) The verifier, for all MYs, must review the data submitted and complete or correct the APH databases if necessary, using the following guidelines.

(a) At least four APH crop years of actual/assigned yields are required to qualify for a MY on the crop; however, four APH crop years of actual/assigned are not required to establish a MY for each unit, P/T, or TMA.

If a MY (P/T or TMA) has less than four years of actual/assigned yields available, an IDY will be used to complete the APH database. IDYs are calculated the same as variable T-Yields; therefore, IDYs will be 100 percent of the applicable T-Yield.

(b) Previous crop year IDYs (such as previous MYs or IDYs) used to create the minimum four-year APH database are not "set" in the MY Summary APH database.

They must be recalculated for the 2019 policy crop year and removed in subsequent crop years as actual yields are reported or assigned yields are applicable. Once four years of actual or assigned yields are applicable for the MY Summary APH Database, non-actual yields must not remain in that APH database.

(c) Examine all actual yields certified on an APH database basis by P/T to determine if they are reasonable. Consider actual yields exceeding the applicable crop year T-Yield published in the actuarial documents multiplied by the factor indicated below (unless the RO publishes different actual yield verification factors) as questionable.

**B. Verifier Responsibilities (continued)**

Use yield flags to identify high yields on which desk audits and/or APH record reviews are required.

(i) IRR practice: 150 percent of the applicable T-Yields.

(ii) NIRR practice: 160 percent of the applicable T-Yields.

(iii) IRR and NIRR T-Yields not identified separately on the actuarial documents: 160 percent of the applicable T-Yield.

(iv) Actual yield verification factors published by the RO. For example, the RO may publish different factors if T-Yields are based on less than 100 percent of the county average yield or exceptionally high actual yields have been produced for a given crop year(s).

(d) The AIP must review all questionable crop year actual yields.

(i) The verifier corrects the actual yield if an error can be identified and resolved (such as transposed numbers, data entry errors, incorrect decimal placement, etc., these may often be identified without a review of production evidence).

(ii) If an error is not identified, or the actual yield after correction still exceeds the guidelines, verification of the actual yield as compared to production evidence is required (APH record review).

(iii) Review of supporting production evidence to verify its acceptability and the accuracy of actual yields. If the supporting production evidence is acceptable:

(A) and the actual yield(s) in question is correct, no further action is needed; or

(B) if errors are found, they are corrected by the AIP verifier to agree with the supporting production evidence.

(iv) The AIP reviews the questionable actual yields submitted and approves, adjusts, or rejects them.

(v) Once the RO or AIP audits and approves a questionable actual yield, it is not subject to further desk audits (APH record reviews), unless the data is revised in subsequent crop years.

**B. Verifier Responsibilities (continued)**

(e) All preliminary MYs (required when initial MYs have been requested) must also be examined to determine if they are reasonable as compared to the applicable T-Yield. Consider MYs exceeding the applicable T-Yield published in the actuarial documents multiplied by the factor indicated below as questionable. Use yield flags to identify high Preliminary MYs on which desk audits are required.

(i) IRR practice: 130 percent of the T-Yield.

(ii) NIRR practice: 140 percent of the T-Yield.

(iii) IRR and NIRR practices not identified separately on the actuarial documents: 140 percent of the T-Yield.

(iv) If error(s) can be identified and resolved, the preliminary MY is recalculated by the verifier (such as transposed numbers, data entry errors, incorrect decimal placement, incorrect calculations, etc., may often be identified without a review of production evidence).

(v) If an error is not identified, or the preliminary MY after correction still exceeds the applicable guideline, verification of all actual yields reported as compared to production evidence is required. (Carryover insureds previously under standard APH databases who are requesting an initial MY are not required to retain production evidence beyond the APH record retention requirements.)

(vi) Review of production evidence to verify reported actual yields. If the production evidence is acceptable:

(A) and the actual yield(s) in question are correct, no further action is needed; or

(B) if error(s) are found, they are corrected by the AIP verifier to agree with the production evidence.

(vii) Once a questionable preliminary MY has been reviewed, actual yields verified correct, and the MY approved, it is not subject to further desk audits in subsequent crop years unless the data is revised.

(2) For crops which AIPs are not authorized to approve initial MYs and for crops the AIPs elect not to approve initial MYs for crops listed in Para. 1748B, all individual unit APH database(s), MY Summary(ies) APH Databases [requests for MY(s)], and supporting documentation must be forwarded to the RO for approval of the initial MY(s).

## 1755 MY Summary APH Database Unit Number

Identify the MY Summary APH Database with the unit number of 0000-0000, with the unit structure code blank and a yield indicator of "M".

## 1756 Updating Established MY(s)

(1) Once initial MYs are approved by the RO or AIP for crops listed in Para. 1748B, the AIP verifier updates, calculates, and approves MY(s) for subsequent crop years.

(2) Update individual APH databases and MY Summary APH Database(s) each succeeding crop year.

(3) If the crop was not grown the previous calendar year, update all MY Summary APH databases with zero acres (if sufficient space exists in the APH database).

(4) The RO/AIP underwriter reviews the data submitted, completes or corrects the updated MY Summary APH database(s) when applicable, and issues the approved updated MY Summary APH database by completing the Approved APH Yield block of the APH database. Review actual Yields reported for each subsequent APH crop year for reasonableness as previously indicated in Para. 1754 B(1)(d) and (e) above.

(a) Insureds must request another initial MY for a new P/T or added land (outside of an initial MY TMA) for which an approved MY has not been previously established. Such requests must be received in the applicable verifier's office no later than 30 calendar days after the PRD. Refer to B above for yield calculation instructions. If the insured does not request another MY, or the request is not timely, the added land or new crop/P/T will receive 100 percent of the applicable T-Yield. The added land or new crop/P/T must have a MY established the subsequent crop year.

(b) For MYs established on an operator basis, the operator is responsible for providing annual production reports to update the MY on all land he or she operates. The verifier must provide a copy of the approved MY to each insured to whom it applies.

(c) For carryover insureds whose previously established MYs were NOT established/converted to an operator basis, each insured is responsible for providing annual production reports to update the MY.

**1757 Cups**

If the previous year's approved APH yield for the P/T or TMA was:

(1) determined under the same conditions (MY both the previous and current crop year), the approved APH yield will not decrease by more than the applicable cup if elected and applicable (yield floors do not apply to MYs); or

(2) not determined under the same conditions (standard APH database last year, MY the current crop year, or individual MY that was converted to an operator), there is no limit to the percent change in the yield.

**1758 Yield Adjustment**

Yield substitution is applicable to the MY Summary APH database, see Para. 1545A for yield substitution procedure. Yield substitution does not apply to individual APH databases when MY applies.

**1759 Yield Exclusion**

YE is applicable to the MY Summary APH database, see Para. 1560 for YE procedure related to MY. Yield exclusion does not apply to individual APH databases when MY applies.

**1760 Certified Organic and Transitional Practices**

Since MYs are selected on a crop basis, MYs apply to certified organic and transitional practices as well as conventional practices.

(1) Separate MY Summary APH databases are required for each practice.

(2) If there are less than four years of certified organic yield history, complete the MY Summary with the certified organic T-Yields. When there are four years of actual and/or assigned yields in the certified organic MY Summary; use these yields to calculate the average yield.

**Exception:** MYs do not apply to acreage transitioning without an organic plan or written documentation from a certifying agent indicating an organic plan is in effect.

**1761-1762 (Reserved)**

## 1763 Acreage Emerging From a USDA Program

### A. General Information

Acreage emerging from a USDA program (such as CRP, etc.) within the two most recent crop years that is being planted to a crop for the first time since being in the USDA program is insurable under the terms of the policy. In accordance with the BP, acreage that is not planted within two crop years of emergence from a USDA program may be insurable through a WA (see the WAH) or by SP statement, if applicable.

For acreage emerging from a USDA program that qualifies as native sod acreage (see GSH Para. 401) refer to Para. 1765.

### B. Initial Year of Planting after Emergence from a USDA Program

(1) Production reports must include applicable FN/Tract/Field(s).

(a) If available, the insured must provide acceptable production history for the year(s) the crop was grown prior to the acreage's enrollment in a USDA program to establish an APH database(s).

(b) Production history from another producer may be used if the requirements in Para. 1508-1509 are met.

(c) If the crop was grown prior to enrollment in the USDA program and acceptable production history is not provided, or not enough production history exists to complete an APH database, see (2) below.

(2) Separate APH databases are required for acreage emerging from a USDA program the first year it is planted to a crop. See Para. 1505E for APH database exception codes, if applicable.

(a) Establish APH databases as follows:

(i) use production history from APH crop years prior to USDA program enrollment from the acceptable production report;

(ii) use 100 percent of the applicable T-Yield identified with a “C” yield descriptor for each applicable P/T to establish the required separate APH database unless the insured provides acceptable production history to complete an APH database; or

(iii) if the insured provides less than 4 years of acceptable production history, use the production history for those years provided that meet the requirements for an acceptable production report and complete the APH database using 100 percent of the applicable T-Yield identified with a “C” yield descriptor for each applicable P/T to establish the required separate APH database.

**B. Initial Year of Planting after Emergence from a USDA Program (continued)**

(b) Use yield indicator "CR" to identify APH databases containing acreage emerging from a USDA program the initial year.

(c) Added land and new crop/P/T/TMA (SA T-Yields) do not apply.

(d) An existing or new MY does not apply to emerging USDA program acreage. If an insured has an existing or new MY, the insured may use the MY for all other acres of the crop, except for the acreage emerging from a USDA program.

Submit the APH database for the acreage emerging from a USDA program with the yield indicator "CR" to allow it to be accepted when other APH databases have an M yield indicator.

(e) A new producer who has not produced the crop in the county will have an approved APH yield based on 100 percent of the T-Yield, see Section 5 for new producer requirements.

**C. Subsequent Years of Planting after Emergence from a USDA Program**

(1) The required separate APH database established the initial year of planting must be combined with an existing APH database the following year in accordance with Part 15 Section 2, unless it meets the requirements for a separate APH database contained in Para. 1505. If a different crop(s) is planted in subsequent years of planting, standard APH procedures apply when establishing an APH database.

If the insured qualifies as a New Producer, the combined APH databases will qualify for New Producer T-Yields as well. If the APH database established for initial planting qualifies as a separate APH database in the subsequent year, New Producer T-Yields may also apply.

(2) If the entire farm was previously enrolled in a USDA Program and is planted in a subsequent year to a crop grown prior to enrollment in the USDA Program, establish APH databases as follows:

(a) use production history from APH crop years prior to USDA program enrollment from an acceptable production report;

(b) use 100 percent of the applicable T-Yield identified with a "C" yield descriptor for each applicable P/T to establish the APH database unless the insured provides acceptable production history to complete an APH database; or

**C. Subsequent Years of Planting after Emergence from a USDA Program (continued)**

(c) if the insured provides less than 4 years of acceptable production history, use the production history for those years provided that meet the requirements for an acceptable production report and complete the APH database using 100 percent of the applicable T-Yield identified with a "C" yield descriptor for each applicable P/T to establish the required separate APH database.

(3) MYs may apply if the requirements in Section 7 are met.

(4) SA T-Yields may apply. If the required APH database established for the initial year of planting must be combined with an existing APH database that qualifies for use of the SA T-Yield, the combined APH database will qualify for SA T-Yields as well. See Para 1774A for instructions for recalculating SA T-Yields. If the APH database established for initial planting qualifies as a separate APH database in the subsequent year, SA T-Yields may apply, even if the crop/P/T has been planted.

(5) The FN/Tract/Field for the unit containing the acreage that has emerged from a USDA program must continue to be reported on the acreage report, production report, and APH database(s) in subsequent years, regardless of whether it is a different crop or not. However, the initial year requirement to report acreage as a separate line item does not apply in subsequent years.

## 1764 New Breaking Acreage

For new breaking acreage that qualifies as native sod acreage (see GSH Para. 401), refer to Para. 1765.

**A. Acreage Planted the Initial Year of New Breaking**

(1) Production reports must include applicable FN/Tract/Field(s).

(2) Separate APH databases are required for new breaking acreage the first year it is planted to a crop. See Para. 1505E for APH database exception codes, if applicable.

(a) Establish APH databases as follows:

(i) for acreage insurable by WA, establish the APH database in accordance with the terms of the WA (for example, if 65 percent of the T-Yield is provided, the AIP must use this to establish the initial year guarantee on the new breaking acreage);

(ii) for acreage that is five percent or less of the insured planted acreage in the unit, the BP provides it is insurable. This acreage may be included in the APH database of an existing unit if a separate APH database is not required; however, identification of this acreage by FN/Tract/Field is still required. If a separate APH database is required, variable T-yields apply; or

**A. Acreage Planted the Initial Year of New Breaking (continued)**

(iii) for certain crops in certain counties, new breaking acreage is insurable if the acreage meets the requirements contained in the SP. Establish the APH database using the appropriate percentage (identified in the SP) of the applicable published county T-Yield in the actuarial documents.

(b) Use yield indicator "NB" to identify APH databases containing new breaking acreage planted the initial year.

(c) Added land and new crop/P/T/TMA (SA T-Yield) does not apply.

(d) An existing or new MY does not apply to new breaking acreage unless it is 5 percent or less of the insured planted acreage in the unit.

For all other new breaking acreage, if an insured has an existing or new MY, the insured may continue to use the MY for all other acres of the crop except for the new breaking acreage.

The APH database for the new breaking acreage must be submitted with the yield indicator "NB" to allow it to be accepted when other APH databases have an "M" yield indicator.

**B. Acreage Planted Subsequent Years after Initial Year of New Breaking**

The required separate APH database established the initial year of planting must be combined with an existing APH database the following year in accordance with Part 15 Section 2, unless it meets the requirements for a separate APH database contained in Para. 1505.

If the SP or a WA assigned a new breaking yield the initial year, replace that yield with the actual production and complete the APH database (for example, using variable T-Yields). If a different crop(s) is planted in subsequent years of planting, standard APH procedures apply.

MY may apply if requirements in Section 7 of this Part are met.

If the insured qualifies as a new producer, the combined APH databases will qualify for new producer T-Yields as well. If the APH database established for initial planting qualifies as a separate APH database in the subsequent year, New Producer T-Yields may also apply.

If the required APH database established for the initial year of planting must be combined with existing APH databases that qualify for use of the SA T-Yield, the combined APH databases will qualify for SA T-Yields as well. See Para. 1774A for instructions for calculating SA T-Yields.

**B. Acreage Planted Subsequent Years after Initial Year of New Breaking (continued)**

If the APH database established for initial planting qualifies as a separate APH database in the subsequent year, SA T-Yields may apply, even if the crop/P/T has been planted. See Para. 1774A for instructions for calculating SA T-Yields.

The FN/Tract/Field for a unit containing the new breaking acreage must continue to be reported on the acreage report, production report, and APH database(s) in subsequent years, regardless of whether it is a different crop or not. However, the initial year requirement to report acreage as a separate line item does not apply in subsequent years.

## 1765 Native Sod Acreage

**A. General Information**

An APH database is required to be maintained separately for any native sod acreage and will contain the actual yields reported by the insured on the production report. Even though the actual yields from the production reports are maintained in the APH database, these yields are not used to determine the approved APH yield and yield substitution does not apply during the first four crop years of planting. The approved APH yield and rate yield will be equal to 65 percent of the T-Yield contained in the actuarial documents or 65 percent of the PTY, if elected [any applicable prevented planting is determined using the production guarantee (per acre) for timely planted acreage, based on 65 percent of the T-Yield contained in the actuarial documents or 65 percent of the PTY, if elected, for native sod acreage until the first four crop years of planting are complete].

(1) The procedures in this paragraph are in addition to procedures in Para. 1763 (when emerging from a USDA program) and 1764 (new breaking) when acreage qualifies as native sod acreage;

(a) Acreage that does not qualify as native sod acreage may still be subject to the new breaking acreage procedures.

(b) For total cumulative native sod acreage of 5 acres or less in the county (de minimis native sod acreage), see Para. 1763 or 1764. De minimis native sod acreage must still be identified with the native sod acreage types and the appropriate program indicator code (see GSH Para. 405).

(2) See GSH Part 4 for additional information regarding native sod acreage.

(3) Refer to WAH Para. 73 for acceptable documentation that may be used to substantiate that the acreage does not qualify as native sod acreage.

(4) If native sod acreage is required to be maintained in a separate APH database and the native sod production is commingled with other production, assigned yield provisions apply.

**A. General Information (Continued)**

**Example:** If a producer has 104 acres in a unit and 4 of those acres are de minimis native sod acreage, policy and procedure allows this acreage to be combined into the same database, thus allowing commingled production (the native sod acreage is de minimis and also less than 5 percent of the total planted acres in the unit). If at a later date the cumulative native sod acreage for this producer in the county exceeds 5 acres, and this occurs prior to the original 4 acres having been planted for four crop years, the 4 acres must then be separated out into its own database until the four crop years of planting are complete.

As long as the native sod acreage was separated the year the native sod acreage exceeded 5 acres, assigned yields would not apply because policy and procedure allowed the commingling of production within the same database while the native sod acreage was under the de minimis and 5 percent provisions. When the native sod acreage is separated into its own database, the production would be prorated.

**B. Establishing APH Databases for Native Sod Acreage**

(1) Within a unit, native sod acreage that was initially tilled and planted in a given crop year will have its own separate APH database(s).

(a) The approved APH yield and rate yield are equal to 65 percent of the T-Yield in the actuarial documents, or 65 percent of the PTY, if elected. The yield limitation flag of "4" must be submitted for native sod APH databases.

(b) Use yield indicator "SB" to identify native sod APH databases for the first four crop years of planting.

(c) SA T-Yields for added land and new crop/P/T/TMA do not apply to APH databases established for native sod acreage. Additionally, the native sod APH databases are not used in the calculation of the SA T-Yield until the first four crop years of planting has been completed.

(d) YA does not apply.

(e) An existing or new MY does not apply to APH databases established for native sod acreage.

(i) If an insured has an existing or new MY, the insured may continue to use the MY for all other acres of the crop except for the native sod acreage.

(ii) The APH database for the native sod acreage must be identified with yield indicator "SB", all other APH databases must have an "M" yield indicator.

**B. Establishing APH Database for Native Sod Acreage (continued)**

(iii) The actual yields in the native sod APH database must be used in the calculation of the MY for the first four crop years the native sod acreage is planted. MYs will apply to the native sod acreage only after the native sod acreage has met the requirement of having been planted for four crop years.

(f) The actual yields in the native sod APH database must be used in the calculation of the PTY, if elected.

(2) Establish native sod acreage APH databases for the initial year that native sod acreage is tilled and planted, when the acreage is:

(a) insurable by WA, establish the APH database using the yield assigned by the WA (65 percent of the T-Yield contained in the actuarial) for each crop that the insured intends to plant on the acreage in the next four years (if the crops are insured on the policy);

(b) insurable by SP or under the BP (five percent or less of the insured planted acreage in the unit), establish the APH database using 65 percent of the T-Yield contained in the actuarial documents; or

(c) uninsurable for the initial year of crop production, establish the APH database using 65 percent of the T-Yield contained in the actuarial documents. The crop planted must be reported on the Acreage Report as uninsurable acreage.

**C. Subsequent Years**

After a native sod APH database is established, that APH database must remain separate for the first four crop years of planting after the native sod acreage was initially tilled and planted. See Para. 1505E for APH database exception codes. After the native sod acreage has been planted for four crop years, the separate APH databases for those native sod acres may be combined with other APH databases or continue to remain separate, as allowed by APH database procedures.

(1) In the second and subsequent crop years after native sod acreage is tilled and planted, when the acreage is:

(a) the same crop/P/T/TMA that was insurable by WA, insurable by SP, or insurable under the BP:

(i) replace the 65 percent T-Yield with actual yields and complete the APH database using the applicable variable T-Yield(s); and

**C. Subsequent Years (Continued)**

(ii) although the APH database is updated with actual yields and applicable variable T-Yield(s), the approved APH yield is limited to 65 percent of the T-Yield contained in the actuarial documents, or 65 percent of the PTY, when applicable and if elected;

(b) a different crop(s) planted in subsequent years, those crops are also limited to an approved APH yield equal to 65 percent of the T-Yield contained in the actuarial documents, or 65 percent of the PTY, if elected; or

(c) uninsurable the initial year and is insurable under the terms of the policy in subsequent years, update the APH database using variable T-Yields. The actual yield from the initial year the acreage was uninsurable cannot be added to the APH, but must be reported on the production report. The approved APH yield will be equal to 65 percent of the T-Yield contained in the actuarial documents, or 65 percent of the PTY, if elected.

The initial year that was uninsurable and was planted to an annual crop is counted towards meeting the first four crop years of planting to a crop.

(2) Native sod APH databases must be combined with an existing APH database after the acreage has been separated for the first four crop years of planting in accordance with Part 15, Section 2, unless it meets the requirements for a separate APH database contained in Para. 1505.

(a) MY may apply if requirements in Part 17, Section 7 are met.

(b) If the insured qualifies as a new producer, the combined APH databases will qualify for new producer T-Yields. If the native sod APH database established for the first four crop years of planting to a crop qualifies as a separate APH database beginning with the fifth crop year of planting, new producer T-Yields may also apply.

(c) If the required native sod APH database established for the first four crop years of planting to a crop must be combined with an existing APH database that qualifies for the use of the SA T-Yield, the combined APH database will qualify for SA T-Yields. See CIH Para. 1774A for instructions for calculating SA T-Yields.

(d) If the APH database established for the first four crop years of planting to a crop qualifies as a separate APH database in the subsequent years, SA T-Yields may apply, even if the crop/P/T has been planted. See Para. 1774A for instructions for calculating SA T-Yields.

**1766-1770 (Reserved)**

## Section 9 Added Land

### 1771 General Information

The added land procedures in this section are applicable for all Category B APH crops when cropland is added to an insured's farming operation in a county in the current crop year.

**Exception:** Insureds cannot elect to use SA T-Yields for added land in counties where MYs are available for the crop, regardless of whether the insured qualifies to use MYs. See Section 7 for procedures regarding MYs. SA T-Yields are not allowed for a crop/P/T insured by a WA that assigns a yield (see WAH).

**Example:** Insured cash leases 1,200 cropland acres to add to his farming operation for the current crop year. The added land procedures in this section are applicable to the 1,200 cropland acres.

**Example:** An insured purchased 1,000 cropland acres five years prior to the current crop year. In the current year, the insured wishes to plant the 1,000 acres to a crop that has never been planted on the 1,000 acres.

The added land procedures in this section are not applicable to the 1,000 cropland acres because the acres were added to the farming operation five years prior to the current year. However, new crop/P/T procedures would be applicable see Para. 1788 for new crop/P/T procedures.

**Note:** Added land procedures in this section apply to transitional and certified organic acreage beginning with the 2017 crop year.

### 1772 AIP Responsibilities

The AIP representative must:

(1) determine the correct unit structure for added land. If additional cropland is purchased or rented after the PRD, it may be added as a separate unit (provided it meets BU/OU requirements and production reporting requirements) or added as part of an existing unit, if applicable; and

(2) notify insureds of added land and cropland acreage limitations prior to the PRD. If the information on the acreage report indicates there is acreage that may qualify as added land, the AIP should contact the insured to explain added land and cropland acreage limitations procedures.

### 1773 APH Databases for Added Land

When cropland is added to a farming operation under the added land procedures and such cropland will:

(1) comprise new BU(s) or separate OU(s), a new APH database must be established for each of the new BU(s) or separate OU(s) (even if such BU or OU is an underlying APH database for an EU/WU); or

(2) be added to an existing unit, a new APH database is not established unless the added land does not qualify for use of the existing unit's approved APH yield.

## 1774 Methods for Determining Approved APH Yields for Added Land

### A. Use of SA T-Yields

(1) When an insured requests the use of SA T-Yields by the PRD, but no later than the ARD, SA T-Yields may only be approved and used to establish:

(a) an APH database for added land established as a new BU or separate OU (even if such BU or OU is an underlying APH database for an EU/WU); or

(b) a separate APH database within an existing unit.

(2) SA T-Yields shall not be used to establish an APH yield for an added land APH database when:

(a) the total land being added to the farming operation is 2,000 cropland acres or greater.

(b) an insured provides a production report supported by the production records of another person sharing in the production of the crop/P/T on any land added for that applicable crop year, and all the requirements of Para. 1508 are met; or

(c) if the insured previously participated in the production of the crop/P/T on the added land.

(3) SA T-Yields are determined based on the crop year the APH database is established, by crop/P/T/TMA.

(a) SA T-Yields are calculated using the approved APH yield from each of the insured's existing APH databases in the county that have at least one year of actual/assigned yields, by crop/P/T/TMA, excluding high-risk land APH databases insured under a separate CAT policy.

(b) Calculate SA T-Yields separately by crop/P/T/TMA, including TMAs identified as high-risk.

**Exception:** SA T-Yields may be calculated using approved APH yields for acreage located in TMAs with T-Yields equal to or lower than the T-Yield of the cropland being added if APH database(s) with actual yields from the same TMA as the added land is not available.

**A. Use of SA T-Yields (continued)**

(c) When the added land is physically located in a TMA identified as high-risk, calculate a SA T-Yield for such land using only APH databases that meet both of the following requirements (if both of the requirements are not met, use 100 percent of the high-risk T-Yield for the added land):

(i) contain at least one year of actual/assigned yields; and

(ii) are for existing units physically located in a TMA identified as high-risk that have the same high-risk T-Yield as the added land.

(4) Make all applicable yield reductions prior to using the approved APH yield of an existing APH database in calculating a SA T-Yield. Yield reductions include the following (see Part 15 Section 6):

(a) excessive actual yields;

(b) inconsistent approved APH yields when insured acreage limitations are exceeded; and

(c) different production methods likely to result in lower yields.

(5) To calculate a SA T-Yield for a new APH database (new BU or separate OU, or separate APH database within an existing unit) for added land, use the following steps in order. An "L" yield descriptor is used to identify SA T-Yields for added land see Exh. 17. When calculating SA T-Yields, use the rounding rules for yields provided in the GSH.

(a) Sum the approved APH yields from all of the insured's existing APH databases in the county that have at least one year of actual/assigned yields, by crop/P/T/TMA, excluding APH databases with high-risk land insured under a separate policy.

**Exception:** When YE or YC applies to a policy, the SA T-Yield is calculated using the current crop year's simple average of:

(1) the adjusted yield for those APH databases with excluded actual yields in an eligible crop year that have at least one actual/assigned yield prior to any exclusions or if the cup applies to the approved APH yield; and

(2) the approved APH yield for those APH databases where actual yields have not been excluded that have at least one actual/assigned yield.

(b) Sum the number of existing APH databases used in (a).

**A. Use of SA T-Yields (continued)**

(c) Divide the result of (a) by the result of (b) to obtain the SA T-Yield by crop/P/T/TMA.

**Example 1:** Insured A has three existing OU APH databases and one BU APH database in the farming operation in the county. Each existing APH database has at least one year of actual/assigned yields. Insured A adds 600 acres of cropland in the current crop year, and wishes to establish a separate OU for the added land using a SA T-Yield. Neither the added land nor the existing APH databases are physically located in a TMA.

Insured A's four existing APH databases have an approved APH yield of 36, 32, 37, and 39. To calculate the SA T-Yield for the new separate OU for the 600 acres of added land:

(1) sum the approved APH yields from the existing units of the crop/P/T (36 + 32 + 37 + 39 = 144);

(2) sum the number of existing units used (4); and

(3) divide the result from (1) by the result of (2) above (144 ÷ 4 = 36). The SA T-Yield is 36.

**Example 2:** Insured A has five existing OU APH databases and two BU APH databases in his farming operation. Each existing APH database has at least one year of actual/assigned yields. Two of the existing OUs are physically located in a TMA, the other three OUs and the two BUs are not.

Insured A adds 400 acres of cropland in the current crop year, and wishes to establish a separate OU for the added land using a SA T-Yield. The added land is not physically located in a TMA.

Insured A's five existing unit APH databases not physically located in a TMA have an approved APH yield of 142, 149, 154, 130, and 150. Insured A's two existing units physically located in a TMA have approved APH yields of 122 and 125.

Because the added land is not physically located in a TMA, only use Insured A's APH databases for existing units that are not physically located in a TMA to calculate the SA T-Yield for the new OU for the 400 acres of added land. To calculate the SA T-Yield:

**A. Use of SA T-Yields (continued)**

(1) sum the approved APH yields from the existing APH databases not physically located in a TMA (142 + 149 + 154 + 130 + 150 = 725);

(2) sum the number of existing APH databases used (5); and

(3) divide the result from (1) by the result of (2) above (725 ÷ 5 = 145). The SA T-Yield is 145.

(6) Once a SA T-Yield has been calculated and approved, the AIP shall enter the SA T-Yield in the APH database for the four most recent crop years. Submit yield indicators to RMA as long as SA T-Yield(s) are contained in the APH database. See Para. 1780 for added land yield descriptors and yield indicators.

(a) AIP will update the APH database with actual/assigned yields, as applicable, in subsequent years, and remove one SA T-Yield for each year an actual/assigned yield is entered.

(b) Do not recalculate SA T-Yields when the APH database with actual/assigned yields is updated in subsequent years, see Para. A(7) for correcting SA T-Yields.

(c) See Exh. 15 for examples of recording and maintaining SA T-Yields.

(7) Do not update SA T-yields in subsequent years once calculated and recorded in an APH database. However, correct SA T-Yields if one or more of the following applies:

(a) SA T-Yield recorded in APH database was calculated incorrectly, including when a SA T-Yield is calculated using an existing unit's approved APH yield before reductions were made to the approved APH yield; or

(b) approved APH yield or adjusted yield of one or more of the existing APH databases used to calculate the SA T-Yield was incorrect.

(8) When a unit structure change or a combination/division of units causes an APH database with a SA T-Yield for one or more years to be combined or divided, replace the SA T-Yields with the applicable variable T-Yield, see Part 15 Section 2 for combining and dividing APH databases.

**Exception:** When RMA combines or divides a P/T/TMA which causes an APH database with a SA T-Yield for one or more years to be combined or divided, recalculate the SA T-Yields using the simple average of the approved APH yields and adjusted yields, as applicable, for the new P/T/TMA APH databases.

**A. Use of SA T-Yields (continued)**

(9) When the APH database established for the initial planting of land emerging from a USDA program, the initial year of new breaking, or the first four crop years native sod acreage is planted:

(a) must be combined with an existing APH database in a subsequent year of planting the same crop/P/T/TMA, the combined APH database qualifies for use of the SA T-Yield if the existing APH database qualified for use of the SA T-Yield, even if the crop/P/T/TMA has been planted; or

(b) qualifies as a separate APH database in the subsequent year of planting the same crop/P/T/TMA and would have qualified as added land, SA T-Yields apply, even if the crop/P/T has been planted.

In both instances, the SA T-Yield is calculated in accordance with (3)-(6) with the exception that the SA T-Yield is based on the current year instead of the crop year the APH database is established.

**B. Use of an Existing Unit's Approved APH Yield**

Added land may be added to an existing BU or OU, and use the existing unit's approved APH yield if the added land is within cropland acreage limitations provided in Para. 1775 and requirements in Para. 1773 and 1774 below are met.

(1) Requirements for adding to an existing BU or OU:

(a) the added land must be physically located in:

(i) the same or higher TMA as the existing unit (by crop/P/T), if T-Yield maps are applicable; or

(ii) a high-risk TMA (including high-risk T-Yields assigned by WA) and has the same high-risk T-Yield as the existing unit (by crop, P/T);

(b) the added land does not qualify as a separate OU and is added to the existing BU or OU; and

(c) the added land qualifies as a separate OU and the insured agrees to the requirements to combine OUs in Para. 1085. If the insured does not adhere to these requirements, a separate APH database must be established and maintained. Complete the added land APH database using variable T-Yields or SA T-Yields, if eligible.

(2) If eligible to use the existing unit's approved APH yield and:

**B. Use of an Existing Unit's Approved APH Yield (continued)**

(a) there is only one APH database within the existing unit, use the existing unit's APH database yield (a separate APH database is not established for the added land); or

(b) there are multiple APH databases within the existing unit, use the simple average of those APH databases' approved APH yields as the SA T-Yield to complete the added land APH database.

(3) If ineligible to use the existing unit's approved APH yield due to exceeding cropland acreage limitations, use variable T-Yields to complete the added land APH database. The added land APH database will remain separate until it has four years of actual/assigned yield and then will be combined with the existing unit's APH database.

**C. Use of Another Person's Acreage and Production History**

(1) When an insured files an acceptable production report by the PRD, the insured may use:

(a) the actual yields of another person sharing in the crop/P/T for the current crop year if the requirements in Para. 1509 are met; or

(b) transferred APH data if the requirements in Para.1507 or 1508 have been met.

(2) Actual yields from another person sharing must account for all units shared with that person for the year(s) certified. SA T-Yields may not be used to establish a yield for other added land rented (share or cash lease) with the same person for the same crop/P/T. If records are unavailable for other added land shared with the same person for the same crop/P/T, variable T-Yields apply.

(3) When less than four years of actual yields of the other person are provided, the APH database is completed using variable T-Yields see Section 2.

(4) Added land that could qualify as separate OUs may be established as one APH database only by an Agreement to Combine OUs, see Para. 1085.

(5) Make all applicable APH yield reductions prior to using another person's acreage and production history. Yield reductions include the following (see Part 15 Section 6):

(a) excessive actual yields;

(b) inconsistent approved APH yields when insured acreage limitations are exceeded; and

(c) different production methods likely to result in lower yields.

**D. Use of Variable T-Yields**

(1) Use variable T-Yields for the added land when acceptable production reports have not been filed and/or assigned yields are not applicable, and the added land is:

(a) a separate BU or OU and does not qualify for use of the SA T-Yield;

(b) a separate BU or OU and the SA T-Yield is less than the variable T-Yield;

(c) added to an existing unit and does not qualify for the existing unit's yield;

(d) partially or entirely located in a TMA with a lower T-Yield than the existing unit, if TMAs are applicable; or

(e) subject to a lower T-Yield for any reason.

(2) Variable T-Yields are determined based on a percentage of the T-Yield for the crop/P/T. See Para. 1503 for applicable percentages to determine variable T-Yields.

**Exception:** When added land is physically located in a TMA identified as high-risk, use 100 percent of the high-risk T-Yield in lieu of the variable T-Yield.

(3) Once the applicable variable T-Yield has been determined, enter it in the APH database for the four most recent crop years. See Para. 1780 for added land yield descriptors and yield indicators. Submit yield indicators to RMA as long as variable T-Yield(s) are contained in the APH database.

In subsequent years, the AIP will update the APH database:

(a) with actual/assigned yields, as applicable;

(b) by removing one variable T-Yield for each year an actual/assigned yield is entered; and

(c) with new applicable variable T-Yields when the number of years of actual/assigned yields used to determine the variable T-Yield percentage changes. See Exh. 15 for examples of establishing and updating APH databases containing variable T-Yields with actual/assigned yields.

## 1775 Cropland Acreage Limitations

### A. Applicability

Use cropland acreage limitations to determine the appropriate yield method for added land. Cropland acreage limitations:

(1) apply only to cropland added to a farming operation in a county in a crop year; and

(2) do not apply to cropland that has production history for the applicable crop/P/T, and the requirements for use of another insured's production history are met, see Para. 1774C and 1508 for requirements for use of another insured's production history for added land.

However, such cropland will be included in the calculation of amount of cropland acres being added to determine whether cropland acreage limitations are met or exceeded.

### B. Determining Cropland Acres

All acres that meet the definition of cropland shall be included when determining the total number of acres for added land and cropland acreage limitation purposes.

(1) Determine cropland acreage limitations based on the crop year the cropland acreage is obtained (purchased or leased) by the insured. Do not add cropland acreage obtained over multiple crop years together when determining the total number of acres for cropland acreage limitation purposes.

(2) The following do not affect the determination of the total number of cropland acres for added land and cropland acreage limitation purposes:

(a) the crop, if any, on the added land;

(b) cropping history, if any, of the added land;

(c) yield history, if any, of the added land;

(d) number of acres (cropland or otherwise) in the insured's farming operation prior to adding the added land;

(e) whether the added land will be added to an existing unit(s) or constitute a separate unit(s);

(f) whether the added land acreage is cash leased, share leased, purchased or otherwise obtained; or

(g) whether a production report based on another insured's production records applies to any of the added land acreage.

## B. Determining Cropland Acres (continued)

**Example 1:** An insured has a farming operation comprised of 1,500 acres. In the 2018 crop year, the insured purchased 160 cropland acres. The insured did not plant on the 160 additional cropland acres in 2018. In the 2019 crop year, the insured cash leases an additional 1,200 cropland acres.

To determine cropland acreage limitation purposes, consider land added in different years separately. In this example, the 160 acres and 1,200 acres are not added together to determine whether cropland acreage limitation were met, but are considered separately.

**Example 2:** An insured currently has a farming operation comprised of 350 acres. In the 2019 crop year, the insured purchased 1,000 acres of land consisting of 200 cropland acres and 800 acres of non-cropland.

Although the insured purchased a total of 1,000 acres of land, only 200 acres meet the definition of cropland. Accordingly, for cropland acreage limitation purposes the total number of cropland acres is 200 acres.

**Example 3:** An insured currently has a farming operation comprised of 3,250 acres. In the 2019 crop year, the insured cash leased two additional tracts of land. One of the additional tracts of land contains 300 cropland acres, and the other contains 400 cropland acres.

One tract of land has production history. The other tract of land has been continuously cropped for several years, but there is no production history available for the acres. The insured wishes to add each additional tract of land as a separate OU to his farming operation.

The total number of cropland acres for cropland acreage limitation purposes is 700 acres (300 + 400 = 700). The cropping/yield history of the land, the request that the land be added as separate units, and the number of acres in the insured's current operation has no impact when determining the total number of added land acres for cropland acreage limitation purposes.

## C. Cropland Acreage Limitation Categories

The amount of added land added to an insured's operation within the county will impact the options available to the insured regarding the yield method that may be used for the added land. The following two categories have been established for cropland acreage limitation purposes.

(1) Total added land is less than 2,000 cropland acres.

**C. Cropland Acreage Limitation Categories (Continued)**

(2) Total added land is 2,000 cropland acres or greater.

**D. Impact of Cropland Acreage Limitation for Added Land**

(1) Do not consider cropland acreage limitations when determining whether an insured may use another producer's production history to establish an approved APH yield for added land. However, such cropland will be included in the calculation of the amount of cropland acres being added to determine whether cropland acreage limitations are met or exceeded.

(2) The following table provides instructions for determining the APH yield for added land added as a new BU or separate OU(s).

| **IF the added land being added as a new BU or separate OU(s) is…** | **THEN establish the approved APH yield for the APH database using…** |
|---|---|
| less than 2,000 acres | the higher of the following:<br>(1) applicable variable T-Yield; or<br>(2) SA T-Yield. |
| greater than or equal to 2,000 acres | applicable variable T-Yield. |

**Example 1:** Insured A purchases 600 cropland acres in the current crop year and is adding it to his operation as a separate OU, planting all 600 cropland acres to corn in the current crop year.

Insured A has three existing OUs in his farming operation, with each unit having five years of actual corn production. Since less than 2,000 cropland acres are being added, the approved APH yield for the added land is established using the higher of the following:

(1) SA T-Yield calculated according to 1774A; or
(2) applicable variable T-Yield.

**D. Impact of Cropland Acreage Limitation for Added Land (continued)**

**Example 2:** Insured A purchases 2,100 cropland acres in the current crop year and adds the acreage to his operation as four separate OUs. Insured A has three OUs in his farming operation, with each unit having three years of actual soybean production.

Since more than 2,000 cropland acres were added, the approved APH yield for each of the four new OUs is established using the applicable variable T-Yield. SA T-Yields cannot be used to establish an APH yield for a unit when the total added land being added to the operation is 2,000 cropland acres or greater.

(3) The following tables provide instructions for determining the approved APH yield for land added to an existing unit.

| **IF the added land being added to an existing unit is…** | **AND…** | **THEN…** |
|---|---|---|
| less than 2,000 acres | neither the added land nor the existing unit are physically located in a TMA, including a TMA identified as high-risk | the added land will be added to the APH database of the existing unit, and the production history of that unit, by crop/P/T, will apply to the added land. |
| | the added land is physically located in the same TMA as the existing unit | |
| | the added land is physically located in a TMA identified as high-risk, and has the same high-risk T-Yield as the existing unit | |
| | the added land is not physically located in the same TMA as the existing unit | a separate APH database, by crop/P/T, within the existing unit must be established for the added land using variable T-Yield of the TMA where the added land is physically located. |
| | the added land is physically located in a TMA identified as high-risk with a different high-risk T-Yield than the existing unit | a separate APH database, by crop/P/T, within the existing unit must be established for the added land using 100% of the high-risk T-Yield where the added land is physically located. |

## D. Impact of Cropland Acreage Limitation for Added Land (continued)

<table>
<tr><th>IF the added land being added to an existing unit is…</th><th>AND…</th><th>THEN…</th></tr>
<tr><td rowspan="3">greater than or equal to 2,000 acres</td><td>the added land does not qualify as a new BU or separate OU(s)</td><td rowspan="2">a separate APH database, by crop/P/T, within the existing unit must be established for the added land using the applicable variable T-Yield.</td></tr>
<tr><td>the added land qualifies as a separate OU according to the CP; however, the insured meets and agrees to all requirements to combine the added land unit and the existing unit according to Part 10 Section 7</td></tr>
<tr><td>the added land qualifies to be a separate OU, and the insured does not meet and agree to all the requirements to combine the added land unit with the existing unit according to Part 10 Section 7</td><td>the insured must elect one of the following:<br><br>(1) separate OU, according to Part 10 Section 2; or<br><br>(2) separate APH database, by crop/P/T, within the existing unit must be established for the added land using the applicable variable T-Yield.</td></tr>
</table>

**Example 1:** Insured A purchases 300 cropland acres in the current crop year. Insured A has three existing OUs in his farming operation, with each unit having five years of actual corn production. Insured A is going to add the 300 cropland acres of added land to one of his existing OUs, and plant all 300 cropland acres to corn in the current crop year.

The added land is physically located in a TMA identified as high-risk with a different high-risk T-Yield as the existing unit. Therefore, establish a separate APH database, by crop/P/T, within the existing unit for the added land using 100 percent of the high-risk T-Yield where the added land is physically located.

Because the added land is physically located in a TMA identified as high-risk, and the existing unit is not, the added land cannot be added to the APH database of the existing unit.

**Example 2:** Insured A purchases 2,100 cropland acres in the current crop year. Insured A has six OUs in his farming operation, with each unit having three years of actual soybean production. Insured A is going to add the 2,100 cropland acres of added land to his existing OUs, and plant soybeans on all 2,100 acres in the current crop year.

The added land does not qualify as a new BU or separate OUs. Since more than 2,000 cropland acres were added, establish a separate APH database, by crop/P/T, within the existing unit for the added land using the applicable variable T-Yield.

## 1776 AIP Review and Verification Prior to Payment of Indemnity

### A. APH Review

If a policy is selected for APH review the year in which the APH database was initially established for added land using SA T-Yields, the AIP must verify the insured did not participate in the production of any crop on any of the added land.

### B. Verification

Prior to the payment of a claim for indemnity for an APH database established under the added land provisions, the AIP must verify the insured did not participate in the production of any crop on any of the added land. If the added land requirements were not met, the AIP must:

(1) recalculate the approved APH yield for the APH database using the applicable variable T-Yield; and

(2) correct the APH database.

## 1777 Added Land Yield Descriptors and Indicators

Yield indicators apply only to added land APH databases, not to new crop/P/T or added P/T APH databases.

| INSURED | ADDED LAND | ADDED LAND APH | YIELD DESCRIPTOR | YIELD INDICATOR |
|---|---|---|---|---|
| **New Producer:** No history see Section 5 | Separate BU or OU | 100% T-Yield | IL | |
| **New Producer:** 1-2 years of history see Section 5 | Separate unit eligible for SA T-Yield | SA T-Yield | IL | A |
| | Separate unit not eligible for SA T-Yield | 100% T-Yield | IL | B |
| | Separate unit SA T-Yield lower than variable T-Yield | 100% T-Yield | IL | C |
| | Added to existing unit and eligible to use existing APH (no separate APH database) | Existing APH | Existing APH | |
| | Added to existing unit but not eligible to use existing APH (separate APH database required) | 100% T-Yield | IL | B |
| **Not a New Producer** | Separate unit eligible for SA T-Yield | SA T-Yield | L | A |
| | Separate unit not eligible for SA T-Yield | Variable T-Yield | S, E, N, T | B |
| | Separate unit eligible for SA T-Yield but lower than variable T-Yield | Variable T-Yield | S, E, N, T | C |
| | Added to existing unit but not eligible to use existing APH (separate APH database required) | Variable T-Yield | S, E, N, T | B |
| | Added to existing unit and eligible to use existing APH (no separate APH database) | Existing APH | Existing APH | |

## 1778-1786 (Reserved)

## 1787 Added Crop/P/T APH Databases

When an insured grows a crop/P/T for the first time within the farming operation (SA T-Yields are not applicable due to no existing units), determine the approved APH yield based on the following.

(1) For insureds who submit acceptable production reports (by the PRD for the current crop year) from another person who has produced the crop/P/T and continues to share in the crop, establish approved APH yields based on the acceptable production report submitted using standard APH procedures.

The approved APH yields for added crop/P/T are subject to reductions for:

(a) excessive actual yields;
(b) inconsistent approved yields when insured acreage limitations are also exceeded; and
(c) different production methods likely to result in lower yields.

(2) For insureds who do not submit acceptable production reports from another person, establish approved APH yields using variable T-Yields. Enter variable T-Yields in the four most recent crop years in the APH database and precede the variable T-Yields by the appropriate yield descriptor ("S", "E", "N" or "T").

**Exception:** If an IRR practice is being carried out and the qualifications in Part 11 Section 1 regarding determined IRR yields are met, AIP will calculate a determined IRR yield.

**Exception:** If a SF practice is being carried out, use the special procedures for determining yields for SF practices see Part 11 Section 1.

**Exception:** The insured qualifies as a new producer see Section 5.

## 1788 New Crop/P/T APH Databases

When an insured grows a crop/P/T for the first time within a unit or APH database and the crop/P/T has been produced within the farming operation, determine the approved APH yield based on the following.

(1) For cropland that was part of the farming operation six or more crop years prior to the current crop year, use the SA T-Yield calculated in accordance with Para.1774A to establish the approved APH yield.

(2) For cropland added to the farming operation in five or fewer crop years (i.e., current crop year - 5), cropland acreage limitations for added land apply. Cropland acreage limitations are determined based on the year the cropland acreage was added, not the crop year in which the APH database is established.

(a) If cropland limitations are not exceeded, use the SA T-Yield calculated in accordance with Para. 1774A above to establish the approved APH yield.

(b) If cropland acreage limitations are exceeded, establish the APH database and calculate approved APH yields using variable T-Yield procedures.

(3) Use the "C" yield descriptor to identify SA T-Yields used to establish new APH databases for a new crop/P/T see Exh. 15.

**Exception:** Insureds cannot elect to use SA T-Yields for new crop/P/T APH databases in counties where MYs are available for the crop, regardless of whether the insured qualifies to use MYs see Section 7 for procedures regarding MYs. SA T-Yields are not allowed for a crop/P/T insured by a WA that assigns a yield (see WAH).

**Exception:** When the APH database established for the initial planting of land emerging from a USDA program, the initial year of new breaking, or the first four crop years native sod acreage is planted must be combined with the existing APH databases in the subsequent year of planting the same crop, if that existing APH database qualifies for use of the SA T-Yield, the combined APH databases would as well. Calculate the SA T-Yield for the current year according to Para. 1774A(5).

If the APH database established for initial planting qualifies as a separate APH database in a subsequent year and would have qualified as new crop/P/T, SA T-Yields apply, even if the crop/P/T has been planted. Calculate the SA T-Yield for the current year according to Para. 1774A(5).

(4) Beginning with the 2017 crop year, new crop/P/T procedures apply to transitional and certified organic acreage.

**1789-1790 (Reserved)**

## 1791 APH Database Impacts When Prior Plan of Insurance Required a Production Report

Some plans of insurance (e.g., ARPI, STAX, etc.) require the insured to provide a production report even if the plan of insurance does not require APH databases.

### A. Production Report Provided

(1) If an insured switches to a CCIP policy, the production reported while insured under the other plan of insurance is used to:

(a) establish APH databases, when an insured did not previously have a CCIP policy or when the acreage insured under the other plan of insurance was not previously a part of the insured's farming operation while insured under a CCIP policy; and

(b) maintain continuity of production records and update APH databases when an insured previously had a CCIP policy and those APH databases remain in the insured's farming operation.

The prior APH databases and production reports for those APH databases that remain in the insured's farming operation are not re-certified, but are used automatically and updated with any applicable production reports while insured under the other plan of insurance.

If the AIP does not have APH databases and/or production reports while the other plan of insurance for the policy, that information may be available from RMA systems or a transferring AIP.

If the insured did not provide OU-based production reports under the other plan of insurance, the insured must use the production report provided while insured under the other plan of insurance the initial crop year of switching to a CCIP policy. In a subsequent crop year, the insured can report by OU or recertify prior year's production report by OU.

(2) When the production report while insured under the other plan of insurance includes unharvested insurable acreage, that information must be included when establishing and/or updating APH databases. See Para. 1305F for information regarding production reporting requirements for unharvested acreage. Although there is not any production from the unharvested acreage, it is considered a year of producing the crop.

(a) If the entire acreage for the APH database was unharvested and destroyed or put to another use (without appraisal):

(i) include the planted acreage with zero (0) production, identified with the yield descriptor of UG; and

**A. Production Report Provided (continued)**

(ii) do not include the yield identified by a UG descriptor in the summation (total yield values and total number of crop years in the APH database) used to calculate the average, rate or approved APH yields.

(b) If a portion of the acreage was harvested and a portion of the acreage was unharvested (no appraisal), include only the production and the acreage from the harvested acres in the APH database.

(c) If production was appraised on representative samples, the amount determined by the appraisal is included in the APH database as insurable production. If an appraisal is for only a portion of the acreage in a field that remains unharvested after the remainder of the crop within the field has been destroyed or put to another use, the appraised production is considered uninsured production and is not included in the APH database, unless the appraisal was taken from representative samples.

**B. Production Report Not Provided**

Insureds who switch from another plan of insurance to a CCIP policy are carryover insureds. Therefore, the use of assigned yields maintains continuity of production reports when an acceptable production report is not provided by the PRD.

If the insured does not provide an acceptable production report by the prior crop year's PRD for the other plan of insurance, assigned yields and related procedures will apply. Since approved APH yields do not apply to non-APH based plans of insurance, there is not a prior crop year's approved APH yield available; therefore, the assigned yield will be 65 percent of the applicable T-Yield.

If the insured did not provide acceptable and timely production reports for multiple crop years, the assigned yield will apply for each missing crop year. However, insureds may provide an amended production report on or before a subsequent crop year's CCIP policy's PRD in accordance with Para. 1303D to be used in that crop year and subsequent crop years.

If there are no previous crop years of production history available due to:

(1) the insured not reporting production while previously insured under the other plan of insurance, assigned yields (65 percent of the applicable T-Yield) will be used to complete the APH database; or

(2) the insured not being insured prior to most recent crop year, 80 percent of the variable T-Yield is used to complete the APH databases due to assigned yields counting as a crop year for variable T-Yield purposes.

### C. Applicability of Yield Limitations

Yield limitations do not apply when switching from another plan of insurance to a CCIP policy the initial crop year. Yield floors will apply, if applicable.

### D. Applicability of Added Land and New Crop/P/T Procedures

When adequate documentation is maintained for land added to the farming operation or an insured grows a new crop/P/T within a unit or APH database while the acreage was insured under another plan of insurance, a request for use of SA T-Yields may be made the initial crop year when switching from another plan of insurance to a CCIP policy for the crop, even if the acreage has been planted, if all other requirements and cropland limitations for added land are met.

Calculate the SA T-Yield in accordance with Para. 1774 (3)-(6).

**Exception:** When YE applies to a policy, the SA T-Yield is calculated using the current crop year's simple average of:

(1) the adjusted yield for those APH databases with excluded actual yields in an eligible crop year that have at least one actual/assigned yield prior to any exclusions; and

(2) the approved APH yield for those APH databases where actual yields have not been excluded that have at least one actual/assigned yield.

## 1792 APH Database Impacts When Prior Plan of Insurance Does Not Require a Production Report

Some plans of insurance (e.g., WFRP) do not require the insured to report yield history or maintain production records. However, if the insured and/or AIP thinks there is a possibility of the insured switching from an APH based plan to a different plan of insurance that doesn't require production reporting and back to an APH based plan of insurance, it is strongly encouraged that the AIP maintain the APH databases the insured had under the APH based plan of insurance and for the insured to provide the AIP with production history on the basis of APH databases established under the APH based plan of insurance.

### A. Production Report Provided

(1) If an insured under a plan of insurance that does not require a production report switches back to an APH based plan of insurance, their APH yield history database will be updated only if continuous crop production reports (including the period insured under the prior plan of insurance that did not require a production report) for all units are filed when returning to an APH based plan of insurance.

(a) Insureds must maintain continuity of production reports across all units; once continuity is broke for one unit, it is broken for all units.

**A. Production Report Provided (Continued)**

(b) APH databases will not be updated with claim data while the insured is under a plan of insurance that does not require the insured to report production.

(2) If the insured provides production reports that maintain the continuity of the APH database prior to switching from the plan of insurance that did not require a production report, then the prior APH database must be used (in its entirety for the portion of the APH database that remains in the insured's farming operation) when the APH database is maintained by the AIP and is available for a transferred policy or is available from RMA. The prior APH database and production reports are not re-certified, they are used automatically.

(a) If APH databases are not available, then only the years for which production reports are provided will be used.

(b) All production reports are subject to record retention based on the initial date of certification. These reports are also subject to APH review.

**B. Production Report Not Provided**

(1) If the insured does not certify production reports, that maintain the continuity of APH, then APH databases must be established according to the following procedures.

(a) If the insured does not certify production for the most recent crop year on all APH databases, APH databases will be established using 65 percent of the applicable T-Yield.

(b) If the insured certifies production for only the most recent crop year on all APH databases, then the other three years required to complete the APH databases will be 80 percent of the applicable T-Yield.

(c) If the insured certifies production for only the two most recent crop years on all APH databases, then the two remaining years required to complete the APH databases will be 90 percent of the applicable T-Yield.

(d) If the insured certifies production for the three most recent crop years on all APH databases, then the one remaining year required to complete the APH databases will be 100 percent of the applicable T-Yield.

(e) If the insured certified the four most recent crop years or more on all APH databases, their APH databases will be based on those yields.

(2) Failure to file the most recent APH crop year's production report on an OU basis will limit the insured's choices regarding OUs under the selected APH based plan of insurance.

**C. Applicability of Cups**

Cups do not apply when switching from a plan of insurance that does not require a production report to an APH based plan of insurance the initial year. Yield floors will apply if applicable.

**D. Applicability of Added Land and New Crop/P/T Procedures**

When adequate documentation is maintained for land added to the farming operation or an insured grows a new crop/P/T within a unit or APH database while the acreage was insured under a plan of insurance that did not require production reporting, a request for use of SA T-Yields may be made the initial crop year when switching from the prior plan of insurance that did not require a production reporting to a CCIP policy for the crop, even if the acreage has been planted, if all other requirements and cropland limitations for added land are met.

Calculate the SA T-Yield in accordance with Para. 1774 (3)-(6).

**Exception:** When YE applies to a policy, the SA T-Yield is calculated using the current crop year's simple average of:

(1) the adjusted yield for those APH databases with excluded actual yields in an eligible crop year that have at least one actual/assigned yield prior to any exclusions; and

(2) the approved APH yield for those APH databases where actual yields have not been excluded that have at least one actual/assigned yield.

**1793-1800 (Reserved)**

# Part 18 Category C Crops
## Section 1 General Information

### 1801 Background

A perennial crop is a plant, bush, tree, or vine crop that has a life span of more than one year. The productivity of most perennial crops follows a similar pattern: Establishment, productive capability is zero as the plant is established and growth begins; Development, once a certain stage of growth is reached (maturity of the perennial crop), production begins and productive capability increases until some maximum level is achieved; Maintenance – maximum productive capability remains relatively constant for a period of years; and Decline – productivity begins to decline as age, disease, etc. reduce the plant's productive capacity.

In commercial situations the plant is often kept in production for some period of time after the onset of decline because the cost of replacement, e.g., costs of new stock and replanting, no production during the establishment stage, etc., exceeds the value of the lost production.

Eventually, the decline in production becomes so great that it is more profitable to replace the aged tree, vine or bush. Additionally, some perennial crop productivity varies by crop and region, P/T/TMA/Other Characteristics and density and may remain fairly constant after maturity.

The productivity of perennial crops may also be influenced by the insured's production choices. Examples may include variables such as location; climate; soil; practices or production methods such as rootstock selection, planting pattern, density, pruning, which includes method and pattern, fertilization, weed control, crop thinning, pest control, insecticide, pollinators, use of bees, disease control, fungicide and frost control, grafting, dehorning/ buckhorning/ stumping, acreage thinning, and interplanting new similar or different varieties of the same or other crops.

There is often significant inter-relatedness among the factors (i.e., the efficacy of any one factor is a function of other factors), and many are influenced by timing and frequency. Thus, the procedure for the underwriting of perennial crops must consider these factors when determining coverage.

Other parts of the CIH apply unless a Category C exception is provided (e.g., Category B only applies to Category B crops, thus does not apply to Category C).

### 1802 Insured Crop

See the policy provisions and actuarial documents for insurability requirements by crop. In addition to requirements for good farming practices, adaptability, insurable, and uninsurable acreage, interplanting and inspecting, many of the Category C APH crops have minimum insurability requirements for age; production; age or production; age and production; and/or percent stand.

Insurability requirements are verified by the AIP through reviews of the insured's certification on the PAW(s); PAIRs performed by the AIP or by the RO; or through other AIP reviews such as an APH review.

## 1803 Crops with Minimum Age and/or Production Requirements

The CP provides age, production, age and production, or age or production minimums that must be met prior to insurance attaching for a perennial crop. The AIP must refer to the specific CP for insurability requirements. After assessing the CP requirements, these procedures should be followed regarding how to establish the insured's guarantee, maintaining production, etc.

**Exception:** Some CP provide exceptions to the insurability requirements by SP, WA, or by the AIP otherwise agreeing in writing to accept insurability of the crop acreage. If insurance is otherwise provided by SP or by WA, etc., treat the crop as having met production and/or age requirements in the policy in administering the following procedures.

When an actual yield in an eligible crop year is excluded using YE, the excluded actual yield is considered when determining whether the crop meets production minimums or age/production minimums for insurability. Exclusion of an actual yield in an eligible crop year does not impact age requirements since the exclusion does not change the age of a perennial crop.

When acreage becomes insurable the initial crop year that age and/or production requirements are met, see Para. 1860 for procedures to establish the APH databases for added insurable acreage and added insurable acreage for specific crops in AZ, CA, HI and UT only.

### A. Age Requirements

The AIP determination of whether age requirements are met is based upon the insured's certification on the PAW, and any subsequent verification by the AIP during a PAIR or other review.

Acreage not meeting minimum age requirements must be reported as uninsurable on the acreage report and the PAW, for the block or unit.

(1) Production from acreage not meeting minimum age requirements must be reported by the insured on the production report.

(2) Production from uninsurable acreage is not included in the APH database.

(3) The insured may elect to include prior production from acreage that had not met age requirements in the APH database once the age requirements have been met.

(4) Failure to report uninsurable acreage separately will result in such acreage being shown and production considered to be commingled in the block or unit for APH purposes.

### B. Commingled Production for Acreage Not Meeting Minimum Age Requirements

When production from uninsurable acreage not meeting the minimum age requirements is commingled with production from insurable acreage, total production divided by total acreage is used for all crop years that were commingled.

The commingled production and all acreage are entered in the APH database. The insured must report the insurable and uninsurable acres on the Acreage Report and PAW. Production from the uninsurable acreage is included in the APH database; however the acreage is not considered insurable on the Acreage Report or PAW.

See Para. 1853 for procedures to separate commingled production for insurable and uninsurable acreage.

When there is commingled production for insurable and uninsurable acreage, YA does not apply and the "AY" descriptor must be used unless Para. 1853 applies.

**Example:** For the same block/unit/P/T, the insured commingled production from 90 acres that met the minimum age requirement and 10 acres that did not meet the minimum age requirement.

The production report indicates 100 acres and production from 100 acres. The APH database shows: 100 acres and production from 100 acres. The Acreage Report & PAW show: 90 acres insurable and 10 acres uninsurable.

Acreage that is combined to meet insurability requirements that are not addressed by the above commingled procedures may require additional yield adjustment by the AIP or may be submitted as a RO Determined Yield Request, unless otherwise provided in this procedure, the policy, or RO UG.

### C. Production Minimum Requirements

The CP or SP may require a production minimum for insurability and may specify a time period when production requirements must be met. For example, the Apple CP provides that in one of the most recent four years, an orchard in Area A must have produced 10 bins of apples per acre.

To meet minimum production requirements:

(1) acceptable production reports must be filed that indicate at least one crop year has met the minimum production requirements as specified in the CP or SP; and

(2) all actual yields and production must be reported and certified by the insured whether or not the production minimum was met and whether or not the block was insurable or uninsurable.

**C. Production Minimum Requirements (Continued)**

Acreage not meeting minimum, must be reported as uninsurable on the acreage report and the PAW for the block or unit.

(1) Production from uninsurable acreage not meeting production minimums must be reported by the insured in the production report.

(2) Production from uninsurable acreage must be kept separate and must not be included in the insured acreage APH database.

(3) Failure to report separately will result in acreage being shown and production considered to be commingled in the APH database for the applicable block or unit.

If production minimums are not met on the commingled acreage's production, then the entire acreage is uninsurable.

**D. Commingled Production for Acreage Not Meeting the Minimum Production Requirements**

When production from uninsurable acreage not meeting the minimum production requirements is commingled with production from insurable acreage, the entire commingled acreage and production for all production yield years must meet the production minimum requirements for insurability.

If the production from uninsurable acreage is commingled with production from insurable acreage; total production divided by total acreage (blocks that have met minimum production requirements and those that have not met production minimums) is used for all crop years that were commingled. The commingled production and all acreage are entered in the APH database for all years, not just the most recent production year for the acreage just reaching insurability. The commingled acres and production must meet production minimums according to the policy.

Procedures to separate commingled production do not apply when there is prior commingled production from insurable and uninsurable acreage. When there is commingled production for insurable and uninsurable acreage, YA does not apply and the yield descriptor "AY" must be shown, unless Para.1853 applies.

**E. Age and/or Production Requirement**

If a crop has age and/or production requirements that must be met, then follow the guidelines in Para.1803A for age or Para. 1803C for production, as applicable.

### F. Cannot Verify Age and/or Production Requirements

The acreage must be reported as uninsurable when insurability is based upon production and/or age:

(1) if production evidence is not provided; and/or

(2) if age cannot be determined, e.g., other documentation does not exist to substantiate the age of the tree for CP with age requirements.

**1804-1806 (Reserved)**

## 1807 General Information

Acreage must be certified by the insured or determined by the AIP. The acreage must include deductions for non-crop acreage including drainage ditches and/or canals within the planting pattern and applicable acreage reductions. See Para. 1810.

For added insurable acreage now meeting policy minimums, see Para. 1859.

For added land recently purchased or leased meeting insurability requirements, see Para. 1860.

## 1808 Acceptable Forms of Acreage Measurement

The acreage must be measured using one of the following forms of measurement.

(1) Planimeter

(2) Wheel, chain or tape

(3) Survey devices

(4) GPS, used in conjunction with aerial photos or satellite imagery

(5) For cranberries, bog maps developed by marketing organizations may be used for AIP acreage determination in lieu of (1) through (4) above.

(6) In conjunction with (1) through (4) above, an AIP may elect to determine acreage using the Tree/Vine/Bush method, if:

   (a) a particular tract of measured acreage, contains different planting densities, age, types/varieties or other characteristics that have different T-Yields, or where crops are interplanted;

   (b) the fields are irregularly shaped;

   (c) the terrain is irregular;

   (d) non-crop acreage exist; or

   (e) acreage adjustments are required, see Para. 1810.

(7) When an AIP elects to use the method in (6) above, any acreage determined using the tree/vine/bush method (e.g., separate blocks) must not exceed the total measured acreage (e.g., a unit) using a method specified in (1) through (5) above.

## 1809 Acreage Measurement Methods

Acreage measurement must be conducted as follows:

(1) For acreage measurement using Para. 1808(1)-(4) above:

(a) measurements are made around the outside of each block based on the spacing within row and between rows;

(b) for the length, measurements should extend beyond the end of the rows, by ½ the within-row spacing, from the center of the outside plants on the end of the rows;

(c) for the width, measurements should extend past the outside row of each block/plot by ½ the distance between rows; and

(d) where a road forms an orchard boundary, the measuring point will be ½ the spacing between tree rows not to extend past the center of the road.

**Example:** An orchard has 15' x 25' spacing, or an average of 15 feet between trees (center of tree to center of tree) within row and 25 feet between rows (center of tree to center of tree).

Measurements would begin ½ of 15' (7.5') from the middle of the trunk of the end tree in an outside row and extend ½ of 25' (12.5') from the other outside row, using the same spacing around the entire block (7.5 feet beyond the ends of the rows and 12.5 feet beyond the outside rows, referred to as the drip line).

(2) For Acreage Measurement using Para. 1808(6), the tree/vine/bush spacing(s) and number of trees/vines/bushes must be determined. See also Exh. 18 E, F, G, H, I, J and K.

See LAM for additional information on non-crop acreage deductions and acreage measurement.

## 1810 Acreage Adjustments

### A. Insurable Acreage Reduction

Insurable acreage must be reduced:

(1) when a significant decrease in original plant stand results due to damaged or removed trees/vines/bushes (e.g., plants are severely diseased, removed, buckhorned, dehorned, stumped, or grafted within the acreage). If the reduction in stand was caused by an insurable cause of loss during the current insurance period, the reduction must be considered in the subsequent crop year.

**Exception:** In lieu of acreage reductions, RO UG may provide procedures for acreage that has been grafted, buckhorned, dehorned, or stumped.

**A. Insurable Acreage Reduction (continued)**

A significant decrease in stand occurs when:

(a) The reduction affects the production potential of the insured crop; and

(b) The decrease in the percent of stand is equal to or greater than 20 percent (or the percentage specified in the applicable SP) based on the original planting pattern for an APH database.

**Example:** If a single APH database represents three blocks, two blocks having 99 percent stand (one block with 10 acres and one block with 15 acres) and one 45 acre block having 79 percent stand, while the overall percentage stand for the total acreage of the APH database is 86 percent, based on an acre weighted basis; the percentage stand change is less than the 20 percent threshold.

However, if there are three separate APH databases for three blocks within a single unit and two blocks have 99 percent and one block has 79 percent, then the acreage associated with the one APH block database having a 79 percent stand exceeds the 20 percent threshold and would require adjustments.

The formula and acres used to determine the percent stand are as follows (with the acres underlined):

(1) First, determine the percent stand for each block, i.e., two blocks having 99 percent stand and one block having 79 percent;

(2) Next, determine the weighted percent stand of the blocks, i.e., (99 percent × 10 acres) + (99 percent× 15 acres) + (79 percent × 45 acres) = 60.3

(3) Once the weighted percent stand of the blocks is determined, add the acres (shown in the underlined above) together. Then divide the weighted percent stand by the total number of acres to determine the acre weighted average, i.e., 15 acres + 10 acres + 45 acres = 70 acres. 60.3 ÷ 70 acres = 86 percent.

**Exception:** As specified in the CP, SP, or RO UG, some crops may require the T-Yield and applicable YA be reduced when there is a reduction in stand. For example, some SP specify that the percent stand reduction percentage is applied to the applicable T-Yield in lieu of acreage reduction.

**A. Insurable Acreage Reduction (continued)**

(2) for uninsurable acreage as provided in the CP or SP, e.g., underage trees.

(3) only for the current and subsequent crop years, unless sufficient documentation exists to adjust the prior year's acreage or a new APH database is being established (e.g., new insured with acreage reduction in previous crop years which is included in the current year's production report).

**B. Acreage Adjustment Decrease**

To decrease acres, the AIP must work with the insured to determine the following.

(1) Identify the percent stand from the initial planting pattern and planted acres. Base all percent stand reductions in subsequent years on initially planted acres until the initially planted acreage is no longer contained in the APH database.

(2) Calculate the percent stand by dividing the number of bearing/insurable trees/vines/bushes by the product of density multiplied by measured acres.

**Example:** 10 acres were initially planted in an 18 x 20 planting pattern with 121 trees per acre. The insured reports 968 trees; the percent stand would be 80 percent [968 trees / (121 trees/acre x 10 acres)].

The percent stand column on the PAW, see Para. 1821 would display 80 percent stand and 10 acres in the acre column. The Acreage Report would reflect 8.0 insurable acres due to the removal of 2.0 acres of trees.

Additionally, for the next crop year the APH database would reflect 8.0 insurable acres for the prior year's production, the PAW would continue to reflect 10 acres at 80 percent stand, and the Acreage Report would reflect 8.0 insurable acres.

**C. Acreage Adjustment Increases**

Once acreage reductions are made, acres can only be increased when authorized by the RO.

(1) The RO may issue UG which specify the procedure to be used by the AIP to increase prior acreage reductions; or

(2) The insured, through the AIP, may request a RO Determined Yield if the RO has not issued UG. The AIP should select the "other" category on the RO Determined Yield request.

**Exception:** RO authorization is not needed when replanted acreage meets minimum insurability requirements specified in the CP or SP.

## 1811 Prior Acreage Removed

It is the insured's responsibility to account for all prior acreage reported on the PAW. For removed blocks, the insured must line through the applicable acreage and indicate the removal date. The insured must continue to report the removed acreage on subsequent PAW(s) until the related production information no longer remains in the APH database(s) unless such acreage is accounted for otherwise by AIP adjustment.

### A. Entire APH Database Removed

If the removed block represents an entire APH database, annotate the removal on the PAW the initial crop year, and in subsequent crop years no further reporting of the removed APH database is required.

### B. Part of an Existing APH Database

If the removed acreage is part of an existing APH database, the insured, through the AIP, may remove the acreage from the APH database for the applicable crop year of removal and any subsequent crop years. The PAW annotation of acreage removal will substantiate the removal from the APH database.

The AIP must submit the APH database with the acres removed from the APH database.

## 1812-1816 (Reserved)

## 1817 All Crops, except Citrus and Macadamia

Age/Leaf year is required to determine the T-Yield, when T-Yields are provided by age, or for insurability requirements in accordance with the policy provisions.

To determine Age/Leaf Year use the following formula.

**X = Policy Crop Year**
**Y = Set Out/Graft Year**

**Formula: (X-Y) + 1 = Age/Leaf Year**

The set out/graft year for APH reporting purposes is the actual calendar year for acreage planted/grafted before July 1. For acreage planted/grafted on or after July 1, the set out/graft year (Y in the formula above) is the year following the calendar year in which set out/graft actually occurred.

When top-worked, the RO reduces the yield, but the leaf year is not affected. A grafted year is not applicable when a tree is only top-worked.

AIPs must submit the set out year and the graft year, if applicable, to PASS. For APH databases which require the use of a T-Yield, such as YA, AIPs must use the graft date to determine the applicable T-Yield.

**Exception:** For Blueberries in Mississippi, the set out year for APH reporting purposes is the actual calendar year for acreage planted before March 15.

For acreage planted on or after March 15, the set out year is the year following the calendar year in which set out actually occurred.

**Example 1:** If the policy crop year is 2019 and the trees were set out/grafted in February of 2012 (prior to July 1, the set out/grafting year is 2012), the age/leaf year is:

(2019 – 2012) +1 = **8 Age/Leaf Year**

**Example 2:** If the policy crop year is 2019 and the trees were set out/grafted in November of 2012 (after July 1), the set out/grafted year is 2013, and the age/leaf year is:

(2019 – 2013) +1 = **7 Age/Leaf Year**

Age/Leaf year is required to determine the T-Yield, when T-Yields are provided by age, or for insurability requirements in accordance with the policy provisions.

The following formula is used to determine the Age/Leaf Year.

**X = Policy Crop Year**
**Y = Set Out/Graft Year**

**Formula: X – Y = Age/Leaf Year**

The policy crop year is designated by the calendar year following the year in which bloom is normally set.

For Texas Citrus fruit only: when top-worked, the RO reduces the yield, but the leaf year is not affected and a grafted year is not applicable.

AIPs must submit the set out year and the graft year, if applicable, to PASS. For APH databases which require the use of a T-Yield, such as YA, AIPs must use the graft date to determine the applicable T-Yield.

The set out/graft year is the actual calendar year for blocks planted/grafted before July 1. For blocks planted/grafted on or after July 1, the set out/graft year is the year following the calendar year in which set out/graft actually occurred.

**Example:** An insured insures a grove planted in April 2013 for the 2019 crop year. Crop year is 2019 and set out year is 2013.

2019 - 2013 = **6 Age/Leaf Year**

Age/Leaf year is required to determine the T-Yield, when T-Yields are provided by age, or for insurability requirements in accordance with the policy provisions.

To determine Age/Leaf Year use the following formula.

**X = Policy Crop Year**
**Y = Set Out/Graft Year**

**Formula: (X – Y) - 2 = Age/Leaf Years**

Policy Crop year is defined as a period beginning with the date insurance attaches extending through the normal harvest time and designated by the calendar year in which the insurance period ends.

Age is defined as the number of complete 12-month periods that have elapsed since the month the trees were set out or were recently grafted, whichever is later. An age determination will be made for each unit, or portion thereof, as of January 1 of each crop year.

**Example:** For crop year 2019, January 1, 2018, is used when determining age. Age in crop year 2019 on Macadamia Nuts for trees set out in April of 2012 is 5 leaf years.

(2019 – 2012) – 2 = **5 Age/Leaf Years**

The 12- month period is the twelve months that have passed since the crop was set out/grafted. The 12-month period is determined for the 2019 crop year as follows.

| SET OUT/GRAFTED | 12 MO. PERIOD | CROP YEAR | AGE |
|---|---|---|---|
| April 2012 | Jan. 1, 2013 | 2013 | 0 |
| | Jan. 1, 2014 | 2014 | 1 |
| | Jan. 1, 2015 | 2015 | 2 |
| | Jan. 1, 2016 | 2016 | 3 |
| | Jan. 1, 2017 | 2017 | 4 |
| | Jan. 1, 2018 | 2018 | 5 |

AIPs must submit the set out year and the graft year, if applicable, to PASS. For APH databases which require the use of a T-Yield, such as YA, AIPs must use the graft date to determine the applicable T-Yield.

## 1820 General Information

The PAW is an insured's self-certification of the planting and other conditions of the perennial crop. The PAW is used by the AIP to determine insurability and other policy requirements.

### A. PAW Submission

The insured must complete and submit the PAW by the PRD each year. For new insureds, when the AIP elects to conduct a pre-acceptance inspection (PAIR), the AIP may not have received a PAW because it is prior to the PAW due date of the PRD. In these situations, the AIP may also complete the PAW on the new insured's behalf.

### B. Failure to Submit a PAW

If the insured fails to complete and submit a PAW by the PRD, the AIP must either:

(1) obtain the required information from the insured;
(2) conduct a PAIR to determine the required information; or
(3) deny coverage for the crop year.

The AIP representative may assist the insured with the PAW completion.

## 1821 PAW Elements

| ELEMENT | REQUIRED INFORMATION |
|---|---|
| **Block Number** | Enter block number, if applicable.<br><br>When reporting by block, show the block numbers to the third place (i.e., 001).<br><br>Multiple parcels being reported together as one block for APH purposes, must be associated with a unique block number on the PAW and must match the block number shown on the APH database. However, if separate information is available by individual block, separate line entries may be made on the PAW.<br><br>Separate APH database/reporting by block (plot) number is required:<br><br>For each P/T/TMA/other characteristics provided in the actuarial document(s), include variety whether specified on the actuarial document(s) or not, age, and density within the insured crop; and<br><br>Prepare a sketch map or provide an aerial map demonstrating the location of each block, designate unique number for each block reported. Enter these numbers along with the block number in the block number column. Complete the items applicable to the crop for each block. |

| ELEMENT | REQUIRED INFORMATION |
|---|---|
| **Type** | Type applicable (e.g. blueberry: Highbush or Rabbiteye) or other characteristic in actuarial document(s) (e.g., peaches Early, Mid or Late). |
| **Practice** | Identify the practice for the block. Enter the applicable practice from the actuarial documents. |
| **Variety** | Name(s) of the variety(ies) contained in this block whether specified in the actuarial document(s) or not. |
| **Rootstock** | Only applicable when required by the crop policy: Arizona-California Citrus Crop, Macadamia Nuts, Peaches, Pistachio, Plum, Prune, Stonefruit, and Walnuts.<br><br>Also applicable for grapes, to indicate whether rootstock is Phylloxera resistant rootstock (e.g., susceptible, AXR-1, etc.).<br><br>Enter the appropriate rootstock designation for each block. |
| **Month/Year Planted** | Enter the month and year trees/vines/bushes/bogs were planted. |
| **Month/Year Grafted** | Grafted includes dehorned, buckhorned, stumped, etc., as applicable to crop provisions reporting requirements.<br><br>Month and year of grafting to the current variety, if applicable; otherwise, enter N/A.<br><br>For Texas Citrus Fruit, if trees were dehorned within the last 8 policy crop years, enter "dehorned" and the month and year dehorned.<br><br>For Florida Avocados, enter the year the trees were grafted to the current variety or stumped (trees were reduced to 4-6 foot height by removing all branches and foliage), or buckhorned (to prune any limb at a diameter of at least four inches. |
| **Number of Plants** | For all crops, except cranberries and lowbush blueberries: Enter the number of bearing plants (trees/vines/bushes), which make up the block. |
| **Plant Spacing** | For all crops, except cranberries and lowbush blueberries: Average tree/vine/bush spacing and/or pattern observed within this block (example 18.5 X 20). See Exh. 18 for other patterns. |
| **Planting Pattern** | For all crops, except cranberries and lowbush blueberries:<br><br>Completed for tree/vine/bush perennial crops:<br>Enter:<br><br>"S" for Square Planting Pattern<br>"B" for Hedgerow or Border Planting Pattern<br>"Q" for Quincunx Planting Pattern<br>"H" for Hexagonal Planting Pattern<br>"D" for Double Row Planting Pattern<br>"O" for Other Planting Pattern |
| **Interplanted with another Crop** | If interplanted with another crop, enter the crop and explain in "remarks". Enter "no" if another crop is not interplanted.<br><br>See Exh. 18 for additional details. |

| ELEMENT | REQUIRED INFORMATION |
|---|---|
| **Acres** | Number of original planted acres to tenths (0.10).<br><br>It is the carryover insured's responsibility to account for all prior acreage reported. If blocks or partial acreage has been removed from the APH database, see Para.1511. |
| **Density** | For all crops, except cranberries and lowbush blueberries:<br><br>Calculate the plant density (number of trees/vines/bushes per acre) as follows:<br><br>number of square feet per acre ÷ number of square feet per tree (based on the current planting pattern)<br><br>There are 43,560 square feet per acre.<br><br>Based on a tree spacing of 20 X 20 = 400 square ft., the number of trees per acre is calculated as 43,560 square ft. per acre ÷ 400 square ft. per tree = 109 trees per acre.<br><br>Or, if trees are being interplanted as a part of a tree replacement program and the spacing changes to 10 X 20 = 200 sq. ft., per tree, the correct density becomes 43,560 sq. ft. per acre ÷ 200 sq. ft. = 218 trees per acre. |
| **Percent Stand** | For all crops except cranberries and lowbush blueberries, the insured must identify the percent stand from the initial planting pattern and planted acres.<br><br>Calculate the percent stand by dividing the number of insurable trees/vines/bushes by the product of density multiplied by original acres.<br><br>**Example:** 10 acres were initially planted in an 18 x 20 planting pattern with 121 trees per acre. The insured reports 968 trees; the percent stand would be 80 percent [968 trees / (121 trees/acre x 10 acres)]. The percent stand column would display 80% stand and in the acres column there would be 10 acres. The Acreage Report would reflect 8.0 insurable acres due to the removal of 2.0 acres of trees.<br><br>For low bush blueberries: Enter the estimated percent plant cover (less 5 percent for shrinkage).<br><br>If the decrease in percent stand is less than 20% (or the percentage specified in the applicable SP) based on the original planting pattern a RO DY request is not required. |

| ELEMENT | REQUIRED INFORMATION |
|---|---|
| **Insurable or Uninsurable** | Designate whether this block has met insurability requirements. Refer to the policy provisions, the actuarial document(s), and this procedure for determining insurable and uninsurable acreage.<br><br>**Example**: Acreage must be reported as uninsurable when minimum requirements are not met for:<br><br>(a) Age;<br>(b) Yield per acre; and/or<br>(c) Age and yield per acre.<br><br>When minimum production requirements, age, or a combination of production and/or age are not met, acreage must be reported as uninsurable. When prior production or acreage is commingled, the entire commingled acreage must meet the production minimum requirements for insurability. Acreage combined to meet insurability requirements may require additional yield adjustment by the AIP or should be submitted as a RO Determined Yield Request. |
| **Totals (For Acres and Number of Plants)** | This is the last row in the table on the form used to enter the summation of the total acres and total number of plants. |
| **IMPORTANT:** Prior to answering these questions, the average yield from the preliminary APH database must be calculated. | |
| **Has Damage (E.G., Disease, Hail, Freeze) Occurred to Trees/Vines/Bushes/Bog that Will Reduce the Insured Crop's Production from Previous Crop Years?**<br><br>**If applicable, list type of disease.** | An insured must answer "YES" if they have a tree disease present in the orchard/grove. Provide the type of disease identified by the insured, e.g., Citrus Blight, Citrus Canker, Citrus Greening, Citrus Tristeza.<br><br>If yes to damage caused by disease, list type of disease. |

| ELEMENT | REQUIRED INFORMATION |
|---|---|
| **Have Practices or Production Methods (e.g., Removal, Dehorning, Grafting, Transitioning to or from Organic been Performed that Will Reduce the Insured Crop's Production from Previous Crop Years?** | If the insured answers "YES", hard copy records of acreage and production are required.<br><br>Additionally for Texas Citrus Fruit, if trees have been dehorned within the last 8 policy crop years, insureds must answer "YES".<br><br>If the acreage was dehorned prior to the current crop year and the dehorned acreage has been inspected and accepted it will not be necessary to re-inspect the acreage or require hard copy records of acreage and production (unless productivity is reduced compared to the year it was last inspected). |
| **Is acreage transitioning from conventional to organic for the first year?** | An insured must answer "YES" the first year the insured transitions to organic practices (with or without a plan), see Para. 1854. |
| **Is acreage changing from organic to conventional for the first year?** | An insured must answer "YES" the first year the insured is going from organic practices to conventional practices, see Para. 1854. |
| **Organic: Has the acreage been affected by a Prohibited Substance (biological, chemical, or other agent) which results in change in practice? If yes, select Organic to Transitional or Organic to Conventional.** | An insured using organic practices must answer "YES" when the organic crop has been effected by prohibited substances, and identify the change in production practice, if any. See Para. 1854. |
| **Is the Current Water Supply (Surface Allotment/Well) Adequate to Produce a Normal Crop For the Crop Year Being Certified Above?** | If the insured answers "NO", hard copy records of acreage and production are required. |
| **Is any of your crop direct market or vertically integrated?** | Identify if any of the crop is direct marketed (e.g. associations, cooperatives, wholesale, roadside, U-Pick, fresh market, processing) or vertically integrated. This question is for production record requirements and will not trigger a PAIR. |

## 1822 AIP PAW Review

The AIP must use the information provided by the insured annually on the PAW to determine:

(1) the insurable acreage for the current crop year;

(2) whether a PAIR must be conducted by the AIP;

(3) whether the approved APH yield should be adjusted; or

(4) whether the crop meets the policy insurability requirements in accordance with these procedures, the policy or any applicable RO UG.

## 1823 PAW Triggers a PAIR

A PAW triggers the need for a PAIR and a RO Determined Yield for insurability when the insured answers:

(1) Yes to whether "… damage (e.g., disease, hail, freeze) occurred to Trees/Vines/Bushes/Bog that will reduce the insured crop's production from previous crop years?"

(2) Yes to whether "…practices or production methods (e.g. removal, dehorning, grafting) been performed that will reduce the insured crop's production from previous crop years?"

**Exception 1:** In lieu of acreage reductions, RO UG may provide procedures for acreage that has been grafted, buckhorned, dehorned, or stumped.

**Exception 2:** If the removal of trees causes a decrease in percent stand that is less than 20% (or the percentage specified in the applicable SP or Florida Citrus in CIH Para. 2009) based on the original planting pattern a RO DY request is not required. Further, an AIP can choose to complete a PAIR to determine the 20%, but it is not required.

(a) Yes to whether "…transitioning from conventional to organic?"

**Exception:** See Para. 1854.

(b) Yes to whether "acreage changing from organic to conventional"

**Exception:** See Para. 1854.

(c) Yes to whether ".. organic acreage has been affected by a prohibited substance which resulted in a change in practice.

**Exception:** See Para. 1854.

(3) No to if "… the current water supply (surface allotment/well) adequate to produce a normal crop for the crop year being certified above?"

**Exception:** Unless otherwise provided in this procedure, the policy, or RO UG.

**1824-1836 (Reserved)**

## Section 5 Perennial Crop Pre-Acceptance Inspection Report (PAIR)

### 1837 General Information

A PAIR is an underwriting tool used by the AIP to:

(1) establish insurability of the crop;
(2) evaluate the risk to be assumed by the AIP; and
(3) verify information provided by the insured on the PAW.

If the PAIR discloses that information provided on the PAW was incorrect or incomplete, the PAW must be corrected.

### 1838 PAIR Requirement

A PAIR is required for the current crop year when:

(1) required by the policy, SP, or for WA to determine insurability;

(2) the person is a new insured under the Texas Citrus Crop Provisions;

(3) triggered by the PAW;

(4) an insured either does not complete a PAW or does not complete a PAW in an acceptable manner;

(5) requested in writing by RMA PM for county crop program;

(6) the AIP is mandated by the policy provisions and agree in writing as a condition of insurance attachment, see Para. 76 of the WAH;

(7) requested by the RO if a new PAIR is necessary for the RO to approve a RO Determined Yield;

(8) damage has occurred to trees, vines, bushes, bogs, etc.; or

(9) cultural practices have been performed that will reduce the insured crop's production from previous levels.

A PAIR is required within the most recent five years for:

(1) RO Determined Yield Request unless triggered by the PAW; and

(2) an APH database identified with high variability of actual yields, see Para. 1861.

**Exception:** An assuming AIP may use a ceding AIP's PAIR when provided by the ceding AIP.

## 1839 PAIR Waivers

PAIRs may be waived by RMA, in writing, when an excessive number of policies require PAIRs that cannot be feasibly accomplished. The RO may provide written approval to the AIP authorizing PAIR waivers, if the AIP provides:

(1) a written request to the RO;
(2) the reason for the waiver;
(3) documentation supporting an excessive number of PAIRs; and
(4) alternative means to reasonably assess the impact to the perennial crop.

## 1840 PAIR Deadline

The PAIR must be completed, and also submitted to the RO when required, within 60 calendar days after the PRD.

PAIRs not completed and submitted to the RO by the deadline for RO Determined Yield Request will result in a RO Determined Yield not being issued.

**Exception:** A RO Determined Yield Request deadline can be extended with RO approval when the request is based on a situation that requires a reduced APH Yield for the current crop year.

## 1841 PAIR Completion Requirements

### A. Inspector

The AIP will conduct the PAIR. The person completing the inspection must possess training equivalent to that of a loss adjuster.

### B. Supporting Documentation

The AIP may request that the insured provide acceptable supporting acreage and production evidence to assist with the completion of the PAIR.

### C. Insurable and Uninsurable Acreage

Complete a separate PAIR by crop for insurable and uninsurable acreage. Each PAIR must identify whether it is for insurable or uninsurable acreage.

Refer to the applicable crop provisions and/or actuarial document(s) for determining insurable and uninsurable acreage.

### D. Acreage Damage

For new insureds, once the acreage is inspected and the application accepted, subsequent damage from insured cause(s) is covered.

(1) If the entire crop is damaged prior to application or the date insurance should have attached, the application is not accepted and insurance does not attach.

**D. Acreage Damage (Continued)**

(2) If part of the crop is damaged, the application may be accepted; however, units with damaged acreage must be rejected and insurance does not attach to the damaged units.

For carryover insureds, if insurance is requested on added acreage that is damaged prior to the PAIR, the request is rejected on a unit basis and insurance does not attach.

If the insured fails to notify the AIP by the PRD, an amount equal to the reduction in the yield will be added to the production to count due to uninsured causes for any notices of damage in accordance with the LAM Para. 843.

If a condition is unreported and occurs before the beginning of the insurance period, the AIP must make additional determinations such as whether the crop is insurable and if misrepresentation penalties apply in accordance with Section 27 of the CCIP.

## 1842 PAIR Elements

| ELEMENT | REQUIRED INFORMATION |
|---|---|
| **Number of Year's Insured has Operated this Unit.**<br><br>**If Less than Three Years, Include Previous Owner Name and Address, If Known.** | Obtain this information from the insured.<br><br>This information will assist the inspector in determining the accuracy and completeness of the APH databases and production reports.<br><br>If less than three years, include previous owner name and address, if known. |
| **Has this Unit Been Insured in Previous Years?**<br><br>**If Yes, Include The Number of Years Insured and Prior Policy Number(s).** | Enter "No" if the acreage in this unit has not previously been insured by the current insured or another producer.<br><br>Enter "Yes" if the acreage in this unit has previously been insured by the current insured or another producer.<br><br>If the unit was previously insured and when appropriate, review any previous PAIRs, PAWs and other policy information (e.g., APH databases) to assist in the PAIR completion to understand any insurability concerns, whether changes have occurred in production practices or methods, etc. that may impact the insurability of the unit. |
| **Describe Weed Control Measures Used for The Unit.**<br><br>**Include a Description of The Orchard/Vineyard/Plantation/Field/Bog Floor Management, i.e., Sterile/Sod/Cover Crop.** | Review with the insured and explain in detail the cultivation and/or spray program used to control weeds.<br><br>Include a description of the current orchard/ vineyard/ plantation/field/bog and floor management (e.g., sterile/sod/cover crop, etc.). |

| ELEMENT | REQUIRED INFORMATION |
|---|---|
| **Describe The Fertilization Program Used For The Unit.**<br><br>**Include the Insured's Method of Monitoring Soil Fertility, e.g., Soil Analysis, Foliar Analysis, or both.** | Describe in detail the fertilization program being used for the unit. |
| **Describe In Detail The Insect Control Measures Used (I.E., Integrated Pest Management/ Calendar Spray Program)**<br><br>**Evidence Of Disease/Insects (Check One):**<br><br>□ **Rare**<br>□ M**oderate**<br>□ **Severe** | Describe in detail the insect and disease control measures used by the insured (e.g., integrated pest management, a calendar spray program, methods used for organic practices, etc.).<br><br>Identify current evidence of disease/insects as: rare, moderate or severe. |
| **Describe Wildlife Control Measures** | Describe the wildlife control measures as applicable to the crop provision reporting requirements. |
| **Describe In Detail The Use and Placement Of Bees for Pollination.**<br><br>**Include Type, Quality, Quantity And Location.** | Describe in detail the use and placement of bees for pollination.<br><br>For all crops, except grapes, include type, quality, quantity and location.<br><br>For grapes: Not applicable.<br><br>Review resources for proper use of bees for pollinations, e.g., CES. |
| **Describe in Detail the Varieties Being Used as Pollinizer(s).**<br><br>**Include:**<br><br>• **Variety**<br>• **Location**<br>• **Quantity**<br>• **Density**<br>• **Configuration.** | For all crops except grapes: Describe in detail the varieties used as a pollinizer when applicable.<br><br>Include variety, location, quantity, density, and configuration (e.g., Golden Delicious pollinizers every 4th row = 25%).<br><br>For all crops except grapes: See addendums for additional pollinator requirements. |
| **Is Tree/Vine/Bush/Plant Replacement Program Being Carried Out?** | Determine whether the insured replaces dead or diseased plants.<br><br>If the insured has a replacement program, identify to what extent, if any, the insured is using a fumigation or crop rotation program. |
| **Describe the trellis type and condition.** | Describe the trellis type for each block (e.g., tatura, slender spindle, lincoln canopy etc). |

| ELEMENT | REQUIRED INFORMATION |
|---|---|
| **Describe in Detail:**<br><br>▪ **the Pruning Practices Used**<br>▪ **the Date Normally Completed**<br>**Indicate Whether Pruning Is Annual Or Biennial** | Describe in detail the pruning practices used (i.e., hand or mechanical), date normally completed, and whether pruning is annual, biennial, etc.<br>Indicate if there is excessive pruning or top working which affect production of the crop to be insured. |
| **Describe In Detail The Irrigation Method and Source.**<br><br>**Surface:**<br><br>▪ **Percentage of Total Supply**<br>▪ **Irrigation District Name**<br>▪ **Allocation Last Year Percentage of Normal**<br>▪ **Expected Allocation This Year's Percentage of Normal**<br><br>**Irrigation:**<br><br>▪ **Wells: Percentage of Normal;**<br>▪ **How Many Wells?**<br>▪ **Total Gallons per Minute?**<br><br>**Water Obtained Through Water Transfer:**<br><br>▪ **Acre Feet Per Acre**<br><br>**Type of Irrigation System** | Describe in detail the irrigation source(s).<br><br>Obtain from the insured, water source(s) and irrigation district(s) from which water is allocated, allocation percentage, and irrigation well information.<br><br>Include any information regarding water obtained through water transfers and any potential curtailment of current and future water supplies.<br><br>Describe the type of irrigation system (i.e., flood, drip, etc.) |
| **Is The Unit Subject To Above Normal Flood Hazard?**<br><br>**If So, Explain.** | Determine whether any abnormal flood hazards exist.<br><br>Explain in detail. |
| **Describe the type of frost protection used including the average times used.** | Type of frost protection used for each block and the average number of times used. If no frost protection system is in place, enter "None".<br><br>For Citrus, determine if the frost protection system is adequate for the Citrus (WPF) with frost protection rate. |
| **Are There Soil Limitations (E.G., Slope, Depth, Drainage, pH, Saline/Alkali, Toxicity)?**<br><br>**If So, Explain.** | Discuss with the insured (and perform an assessment) to determine any potential soil limitations (e.g., slope, depth, drainage, pH, saline, or alkaline toxicity, etc.).<br><br>Other resources should also be considered when appropriate, such as soil maps.<br><br>Areas of frequent replanting or stunted growth may indicate that soil limitations exist.<br>Explain in detail. |

| ELEMENT | REQUIRED INFORMATION |
|---|---|
| **What Date Is Harvest Completed For The Unit Under Normal Conditions?** | Determine the normal harvest completion date from the insured. |
| **Remarks** | Any special information that clarifies items on this form. |
| **Type of Mulch used and Percent of Bare Surface Covered** | For Low Bush Blueberries: Describe Type of mulch used and percent of bare surface covered |
| **Previous Loss History For The Last 4 Years.**<br>▪ Year<br>▪ Cause<br>▪ Extent | For Cranberry: Explain the previous loss history for the last four (4) years. If hail has occurred the last two (2) years or was a secondary cause of loss, describe the severity of the damage in the "remarks", attaching additional sheets as necessary. |
| **Specific Management practices utilized each year of operation on this bog.** | For Cranberry: Complete the specific management questions in the following blocks for each applicable year for all cranberry bogs with less than four years of records. Describe in detail any improvements for newly purchased bogs and the prior manager's experience.<br>▪ Fertilization Program<br>▪ Pruning Program<br>▪ Sanding Program<br>▪ Insect Program<br>▪ Weed Program<br>▪ Bog Oxygen Program<br>▪ Water Supply<br>▪ Method of Harvest |
| **Bog manager's prediction of expected yield of this bog for the next 4 years** | For Cranberry: Enter the expected yield of this bog for the next 4 years. |
| **Explain previous bog manager's experience.** | For Cranberry: Explain the experience of the previous bog's manager. |
| **Describe The Use Of A Frost Warning System For The Bog.** | For Cranberry: Describe the use of a frost protection warning system for the bog. If frost protection equipment is available, describe the type and amount. If equipment is present but does not appear to be useable, note in the "remarks". |
| **Describe the presence or absence of a backup power source for irrigation system and type of system.** | For Cranberry: Describe the presence or absence of a backup power source for an irrigation system and also identify the type of system. |
| **Describe the backup security systems utilized for irrigation equipment.** | For Cranberry: Describe the backup security systems utilized for the irrigation equipment. |

| ELEMENT | REQUIRED INFORMATION |
|---|---|
| **Average number of times the frost protection system is used each year, if no frost protection system is in place, enter none.** | For Cranberry: Enter the average number of times the frost protection system is used each year, if there is not frost protection system in place enter none. |
| **Time needed to flood bog, and time needed to remove the water from the bog.** | For Cranberry: Enter by block, the time needed to flood bog, and the time needed to remove the water from the bog. |
| **Describe the general condition of bog dikes and banks** | For Cranberry: Describe the general condition of bog dikes and banks. |
| **Describe The Pruning/Sanding Practices Used:** | For Cranberry: Evaluate and note pruning and sanding of the Cranberry bog. Determine if the bog is being pruned relative to its management condition. |
| **Harvesting Method** | For Cranberry: Describe last year's and next year's harvesting method, wet and/or dry and the percentage for each method. |
| **Bog Map** | For Cranberry: Attach a bog map showing each bog as a separate block. If a bog contains uninsurable acreage or is undergoing partial renovation, list these acres as separate blocks. |
| **Measured or Determined Acres of Unit**<br><br>**Total Unit Acreage Insurable and Uninsurable**<br><br>**Method(s) of Measurement** | Enter the total unit acreage (insurable and uninsurable) and the methods of measurement. |
| **Measured or Determined Acres of Unit**<br><br>**Total Unit Acreage Insurable** | Enter the total unit insurable acreage (e.g., if adjusted for percent stand). |
| **Determine Whether Current Observed Conditions Reconcile To Prior Records** | Review the APH database for prior production and acreage (by variety) as compared to the current acreage and varieties based upon the PAIR.<br><br>Note any inconsistencies and reconcile tree removals, replacements, grafting, production or practice changes, etc.<br><br>This review will assist in determining acceptability of prior production records and insurability determinations for the current crop year. |

| ELEMENT | REQUIRED INFORMATION |
|---|---|
| **Percent Stand**<br><br>▪ **Less Than 50%**<br>▪ **50-60%**<br>▪ **61-70%**<br>▪ **71-80%**<br>▪ **81-90%**<br>▪ **91-100%** | Identify the percent stand by checking the appropriate column on the form.<br><br>Based on the original planting pattern, identify the percent stand.<br><br>(1) Identify spaces occupied by live trees/vines/ bushes/plants<br>(2) Identify bearing trees/vines/bogs/bushes/plant (only include the acreage harvested by the insured)<br><br>Assess the insurable stand |
| **Describe the previous loss/damage history** | Explain the previous loss history for the last four (4) years. |
| **Determine The Current Unit Potential:**<br><br>□ **Stable**<br>□ **Declining**<br>□ **Increasing** | Evaluate and describe the unit's current crop potential as stable, declining or increasing. |
| **Do Trees/Vines/Bushes/Plants have Sufficient Vigor to Produce the Preliminary APH Yield Computed for this Unit?** | These are subjective questions requiring evaluation of the unit's vigor relative to the preliminary APH yield.<br><br>Note the amount of tree/vine/bush growth, limb/cane/bush size, and color, and other factors which indicate the unit's ability to produce the preliminary APH yield. |
| **Note Overall Plant Vigor as:**<br><br>▪ **Poor**<br>▪ **Average**<br>▪ **Poor** | Note the overall plant vigor as: good, average or poor. |
| **Determine if the rootstock variety is adaptable to the area and resistant to disease** | Explain if the rootstock listed on the PAW is adaptable to the area and resistant to disease.<br><br>For Grapes/Table Grapes: Indicate the type of Phylloxera resistant rootstock (e.g., susceptible, Axr-1, etc.). |
| **If Applicable, Provide Inside Bin Measurements** | When complete verifiable first handler or third party records are not provided by the insured that substantiate bin size, the bins must be measured. Provide inside bin measurements to substantiate reported production. |
| **Insurable Acreage And Tree/Vine/Bush/Bog Information** | Verify PAW(s) entries, making any corrections needed, and initial the PAW. |

## 1842 PAIR Elements (Continued)

| ELEMENT | REQUIRED INFORMATION |
|---|---|
| **Uninsurable Acreage And Tree/Vine/Bush/Bog Information** | Verify entries on PAW(s), making any corrections needed, and initial the PAW. |
| **Obtain And Attach Aerial Photo(s)/Map(s).** | Obtain aerial/satellite photo(s) and/or maps (e.g., GPS) with blocks, units, legal description, FSN/Tract and Field (when applicable) must be clearly identified.<br><br>When the aerial/satellite photo(s) and/or map(s) (e.g., GPS) are not available, include a hand sketch map with the following information:<br><br>(a) Identify the location of separate units for the same insured. The unit location must identify roads, the nearest intersection, landmarks along with cardinal directions (e.g., a north arrow);<br><br>(b) Identify the location of blocks within one unit. Sketch out the blocks, showing the exact location of each block in relation to other blocks in the unit. Label each block with a Block Number and any other applicable identification (e.g., home farm); and<br><br>(c) Include an overall sketch map of all units. |
| **Additional Information And Comments (Attach Additional Sheets As Necessary)** | Additional notes and observations, which will assist the verifier in relating unit information to actual yields contained within the APH database.<br><br>Include additional sheets, as necessary, referencing appropriate items. |
| **Your Evaluation Of The Management Of This Operation: (Above Average; Average Or Below Average)**<br><br>**Your Evaluation Of The Orchard/Vineyard/Bog/ Grove/Field Condition: (Above Average; Average Or Below Average)** | These are subjective questions requiring consideration for overall evaluation of management and conditions of the unit. Provide explanation if below average. |
| **Action Recommended:**<br>**Acceptance, RO Determined Yield Request, Rejection** | Provide recommended action.<br><br>Sign and date the report.<br><br>Forward to the Supervisor with any applicable APH database(s), PAW, production records, acreage determinations, to the RO/AIP. |

## 1843-1849 (Reserved)

## Section 6 APH Database

### 1850 APH Database Establishment

APH databases must be established by unit by each unique combination of P/T/TMA and Other Characteristics identified in the actuarial documents and specified in the CPs or SPs. See Para. 1505 for exception and Exh. 18.

Other characteristics include, but are not limited to:

(1) T-Yields by age/leaf year;
(2) density; and/or
(3) early, mid and late season, etc.

### 1851 Block Reporting

Block reporting allows the insured to report and maintain separate production and acreage by block. An insured may report production and an AIP may establish an APH database by block. However, each block is not considered an OU unless the OU provisions in the Policy are met, e.g., non-contiguous land.

The APH database is established using the production report. Reporting by block allows production from underage trees or acreage not meeting production minimums to be maintained separately.

AIPs must establish APH databases within a unit by each unique combination of P/T/TMA/Other Characteristics and insureds may elect to report by block P/T/TMA/Other Characteristics are the same, and production records are maintained separately.

**Example:** Unit 0001-0001 has 2 blocks of land each containing 10 acres of the same crop/P/T/TMA/Other Characteristics with blocks of different age and density, an APH database may be established for each block provided the insured maintains production records by block.

### 1852 Separate P/T/TMA/Other Characteristics

If a different T-Yield by age and/or density is specified in the actuarial documents and there are different age and/or density blocks in the APH database, then the Weighted Average Age/Density Worksheet may be completed to calculate the T-Yield when a T-Yield is applicable to the APH database.

The APH database calculated using a weighted average age and/or density to arrive at a T-Yield must be reported by the AIP to RMA with yield indicator "W". If T-Yields are not required in the APH database (e.g., more than four years of actual/assigned yields are available and YA is not applicable), then the Weighted Average Age/Density Worksheet is not required.

## 1853 Commingled Production

The following applies to Category C crops with commingled production.

(1) If the insured commingled production for acreage that does not meet policy minimums, see Para. 1803B and D.

(2) If RMA establishes new P/T/TMA/Other Characteristics, see Para. 1521, yield descriptors "AC", "GC", or "VC" apply when databases are divided. Generally, the insured should know the acres by type, TMA and Other Characteristics.

(3) When the insured divides units with the same P/T/TMA/Other Characteristics for acreage that has met age and/or production requirements, see Para. 1088.

(4) If the insured commingles production between units, assigned yield procedures apply, see Para. 1856C.

(5) If the insured commingled production between APH databases within the same unit containing different P/T/TMA/Other Characteristics for acreage that has met age and/or production requirements acreage, [use the Multi-Purpose Production and Yield Worksheet, Exh. 17 and also see Para. 1715 for Reporting Production for P/T/TMAs, to separate production.

**Exception:** The Multi-purpose Production and Yield Worksheet cannot be used to separate production commingled between conventional and certified organic acreage or transitional and certified organic acreage. In such cases, the insured must request a RO Determined yield.

(6) If the insured commingled production within the same unit containing the same P/T/TMA which includes some immature acreage, commingled production procedure, Para. 1088B and 1715 does not apply, the APH database is not eligible for YA and yield descriptor "AY" applies to the actual/assigned yield(s), unless:

(a) Production and Acreage Separate by Block. When the insured certifies separate production and acreage by block for all years certified for insurable acreage (as provided in the CPs) the insured will receive an approved APH yield based on actual/assigned yields and T-Yields based on the current age and density by P/T/TMA/Other Characteristic of each block. The block may be eligible for YA if T-Yields are available for the age and density. See the APH Block Production Para. 1851 and Weighted Average Age/Density Worksheet Para.1852, and respective worksheet instructions for each crop in Exh. 18;

(b) Production for Most Recent Year Separate by Block. When the insured certifies separate production and acreage by block for at least the most recent year, for insurable acreage (as provided in the CPs) the insured will receive an approved APH yield based on actual/assigned yields and T-Yields based on the current age and density of each block as described above; however the total commingled production and acreage (insurable and uninsurable ) from the previous crop years will be attributed only to the blocks that are of the age specified and older for the applicable crop. YA may be applicable to the most recent year separated by block, see the APH Block Production Para.1851; or

(c) Weighted Average Age and Density is Determined. The APH database may be eligible for YA if the Weighted Average Age and Density can be determined. See the Weighted Average Age/Density Worksheet Para. 1859.

## 1854 Organic Perennials

### A. Establishing APH Databases for Acreage Transitioning to Certified Organic

(1) The initial year an insured transitions an existing conventional perennial crop to organic farming practices (with or without an organic plan) and the actuarial documents provide a lower T-Yield for certified organic or acreage in transition to organic than the non-organic T-Yield for the same crop/type/TMA and Other Characteristics (e.g., age/density), AIPs will establish the APH database for the transitional acreage by using the percentage difference in the applicable T-Yields between conventional and transitional organic practices in the actuarial documents. AIPs are not required to conduct a PAIR and a request for RO DY is not required. The AIP must take the percentage difference between the applicable T-Yields times the average yield for the conventional APH database and use the result as the transitional acreage's determined yield for the four most recent crop years and establish the APH database for the acreage in transition to organic.

(a) AIPs must compare the applicable T-yield for the conventional P/T/TMA/Other Characteristics to the applicable T-Yield for the transitional acreage P/T/TMA/Other Characteristics to determine the percentage difference between the RMA published T-yields for conventional and transitional acreage. For example, the applicable T-yield for transitional acreage is 883 boxes; the applicable T-Yield for conventional acreage is 1,010 boxes. The percentage is .87 or 87% (883/1,010).

**A. Establishing APH Databases for Acreage Transitioning to Certified Organic (Cont.)**

(b) AIPs must use the percentage determined in (a) and apply it to the average yield in the APH database for the conventional acreage to derive a number which will be used as a determined yield for the most recent 4 years to establish an APH database for the acreage in transition to organic. For example, the average yield for the insured's conventional acreage that he/she is transitioning to organic is 1,600 boxes. Take the applicable percentage (see example in (a), 87%) times the average yield of 1,600 to determine the yield to use in the most recent 4 years for the APH database of 1,392 (1600*87%) for the acreage in transition to organic, these yields must be identified with yield descriptor "OF" (see Exh. 15W (5)). YA, YE, nor cups apply to the APH database. These yields will roll out of the APH database in subsequent crop years as they are replaced with actual yields.

**Note:** If the insured is transitioning without a plan, the acreage must continue to be insured as a conventional farming practice and any loss due to organic farming practices will be considered an uninsurable cause of loss. Even though the acreage must be insured as conventional according to the BP, the APH must still be factored in accordance with (a) and (b). AIPs may continue to maintain the previous conventional APH database (now inactive), but when applying the factors times the average yield, the AIP must establish a new APH database, with four "OF" yields, due to the change in practice to organic, yet since the insured is transitioning without a plan, then the APH database must be identified with a conventional practice. If the insured has an organic plan, the APH database is identified with the transitional practice.

If production minimums are required by the crop policy, the determination is made using the "OF" yields determined in step (1)(b). If the acreage no longer meets production minimums due to the factored "OF" yield caused by the change in practice, then a RO Determined Yield must be requested and the AIP must conduct a PAIR to ensure that the acreage is capable of meeting production minimums.

(2) The initial year when an insured transitions an existing conventional perennial crop APH database to organic farming practices (with or without an organic plan) and the actuarial documents provide an equal or higher T-Yield for certified organic or acreage in transition to organic than the non-organic T-Yield for the same crop/type (age/density or early/mid/late designation, as applicable), the AIP is not required to conduct a PAIR and a request for RO DY is not required. The APH database for the transitional acreage must use the APH database for the conventional acreage. The practice associated with the APH database will need to be modified, as applicable by the AIP.

**A. Establishing APH Databases for Acreage Transitioning to Certified Organic (Cont.)**

(a) If an insured is transitioning to organic with a plan, use the existing actual yields contained in the conventional APH database with the appropriate P/T from the actuarial documents, e.g., transition to organic.

(b) If an insured is transitioning to organic without a plan, it must be insured under the conventional farming practice and in accordance with the BP, any losses associated with the organic farming practices will be considered an uninsurable cause of loss.

(3) If an insured is transitioning from certified organic or acreage in transition to conventional farming practices, the AIP is not required to conduct a PAIR and a request for RO DY is not required. An insured may wish to request a higher yield request if the yield is expected to increase. If a RO DY is not requested, the APH database will retain organic actual yields (both certified acreage and acreage in transition to organic) as actual yields in the conventional database.

(4) When acreage in transition to organic becomes certified, the insured may answer "NO" to the PAW organic questions. The actual yields contained in the APH database (identified with an "A" yield descriptor) while in transition to organic will continue to be used and the APH database will identify the appropriate P/T from the actuarial documents (e.g., certified organic). If there are less than 4 years of yields in the APH database the applicable organic T-Yield will be used, i.e., certified organic since this acreage has transitioned.

**B. Acreage Affected by Prohibited Substance**

If certified organic or acreage in transition to organic, is affected by a prohibited substance, the insured must answer "YES" to the PAW question "Has the acreage been affected by a Prohibited Substance (biological, chemical, or other agent) which results in change in practice?". If acreage is affected by a prohibited substance (See GSH for more information regarding prohibited substances) and results in a change in insurable practice:

(1) Before the ARD, a RO Determined Yield must be requested when the prohibited substance may result in a lower approved APH yield. If the change results in returning from certified organic to conventional farming practices or transitioning acreage to back to certified organic, the AIP is not required to conduct a PAIR and a RO Determined Yield is not required unless a reduction in insurable acreage or a lower approved APH yield may result.

### B. Acreage Affected by Prohibited Substance (Continued)

(2) After the ARD, the crop is insurable as it was reported; however if the prohibited substance may result in a lower approved APH Yield, the insured must answer "YES" on the PAW in the subsequent crop year, and a RO DY must be requested in the subsequent crop year. If the change results in returning from certified organic to conventional farming practices or transitioning acreage back to certified, the AIP is not required to conduct a PAIR and a RO DY is not required unless a reduction in insurable acreage or a lower approved APH yield may result.

## 1855 Acreage Less than a Tenth of an Acre

An APH database cannot be established for acreage that is less than 0.1 acre. If acreage has been identified that is less than 0.1 acre, the acreage must be combined with another APH database to be insurable. If no other APH database is available, the acreage is not insurable.

## 1856 APH Database Establishment Methods

A minimum of four years of yields are required in each APH database to calculate approved APH yields. Average APH yields are based on the simple average of the yields for each APH crop year contained within the APH database with additional considerations to arrive at the approved APH yield.

These procedures provide additional requirements to establish the APH Database for Category C crop. Also refer to Parts 13 and 15 for Production Reports and APH Databases, and Part 15, Sections 3, 4, 5, and 6 for APH Yield Adjustments, Yield Exclusions, cups and Yield Reductions for additional procedure regarding the APH database.

### A. No Actual or Assigned Yields

For new insureds who have produced the insured crop and do not provide acceptable production reports for the acreage in the insured's current operation by the PRD, approved APH yields are calculated by multiplying the applicable T-Yield(s) by 65 percent for the entire crop policy.

**Exception:** Not authorized when the CP contains minimum production requirements for insurability. The insured must provide records substantiating that the production minimums were met and us the records to complete APH.

(1) New insureds must request approved APH yields by completing and signing a production report. Separate four year APH databases are required for each block or unit (by P/T/TMA/Other Characteristics). Each APH database must contain four 65 percent T-Yields. AIPs must quote the applicable 65 percent T-Yield as the preliminary APH yield. The verifier must approve all approved APH yields.

(2) Cups do not apply the initial year insured; however, in subsequent crop years, APH databases with at least one actual or assigned yield may be eligible for cups.

**A. No Actual or Assigned Yields (Continued)**

(3) OUs are not authorized.

(4) For Subsequent Crop Years.

(a) Production reports are required and assigned yield provisions apply if acceptable production reports are not filed by the PRD.

(b) The T-Yield is not set in the APH database. It is updated with T-yield changes in subsequent years, variable percentage changes based on number of certified yields; current age/density if T-Yields are by age in the actuarial documents; or new T-Yields are provided in the actuarial documents for the current crop year. The APH database must be updated each year and the approved/average and rate APH yield recalculated.

**B. Actual and/or Assigned Yields**

When acceptable production reports containing actual yields are filed and/or assigned yields apply for a crop year, the crop year is counted for variable T-Yield purposes.

(1) When one to three years of actual/assigned yields are available for an APH database, the average APH yield is determined by a simple average of the insured's actual/assigned yields and applicable variable T-Yields used to complete the four year minimum APH database divided by four. See Para. 1503.

(2) When four or more years of actual and/or assigned yields are available for an APH database, the average APH yield is determined by a simple average of the insured's actual and/or assigned yields divided by the number of years of actual and/or assigned yields contained in the APH database.

**C. Assigned Yield Instructions**

Assigned yields apply on a crop year basis to all APH databases that had insurable acres (except units with claims for indemnities or if the producer qualifies for a temporary yield) if acceptable production reports for the most recent crop year in the base period are not provided by the PRD. Production from claims for indemnity is considered production reports and must be reflected in the APH database used. When assigned yields apply in the current crop year, the insured does not qualify for OU. See Para. 1026.

**Exception:** Assigned yields are not applicable for Florida Avocados and if in subsequent crop years the required production reports are not provided, the policy will be referred to the RO for a RO Determined Yield. See Para. 1881.

If production in the APH database contains assigned yields in previous years and the APH database is being recertified at a lower level, (e.g., APH database established as unit/P/T/ was divided into blocks based upon age) the insured must:

**C. Assigned Yield Instructions (Continued)**

(1) Recertify by APH database using actual production records;

(2) Use the acres associated with the new APH databases (e.g., by block) and the previously assigned yield if the original APH database was composed of acreages with the same T-Yield; or

(3) Recalculate prior assigned yields if the original APH database was composed of acreages with different T-Yields using the Multi-Purpose Production and Yield Worksheet instructions in Para. 1857. Yield descriptor "AC", "GC" or "VC" apply to the APH database. These yields are not eligible for yield adjustments.

## 1857 Multi-Purpose Production and Yield Worksheet

Use the Multi-Purpose Production and Yield Worksheet to reconstruct the previously assigned yield into separate assigned yields when the contributing acreages had different T-Yields.

| COLUMN | REQUIRED INFORMATION |
|---|---|
| **1** | Acres for the new APH database |
| **2** | T-Yield for the new APH database (weighted average if yield indicator "W") |
| **3** | New APH database total (Col. 1 X Col. 2) |
| **4** | Acres for the original APH database |
| **5** | T-Yield for the original APH database (weighted average) |
| **6** | Original APH database total (Col. 4 X Col. 5) |
| **7** | Factor (New APH database total Col. 3 ÷ Original APH database total Col. 6) |
| **8** | Assigned yield for Original APH database |
| **9** | Assigned production for the Original APH database (Assigned yield Col. 8 X acres Col. 4) |
| **10** | Reassigned yield for new APH database (assigned production Col. 9 X factor Col 7 ÷ acres for the new APH database Col. 1) |

## 1858 T-Yield Instructions

In addition to the procedures in Para. 1503, the following applies to Category C crops.

**A. Grafting/Dehorning**

For crop acreage modified by grafting (or dehorning), the month and year it was completed must be used to determine the applicable leaf-year (age) and T-Yield (unless an alternative T-Yield and procedures are provided in the actuarial documents or RO UG). Top-working is not considered "grafting". Post-grafted/dehorned acres must meet CP insurability requirements prior to insurability.

**Exception:** For grafted apple acres in the States of Idaho, Oregon, and Washington, see Para. 1864.

### B. Added Land

Variable T-Yield exceptions for added land and use of prior producer records, see Para. 1860.

### C. Percent Stand

When variable T-Yields are used in the APH database, they are reduced for percent stand adjustments as required by the CP or SP (the APH database would only report the T-Yield (no acres), thus the T-Yield which is provided on a per acre basis is reduced).

(1) When Variable T-Yields are reduced for percent stand, the yield must be identified with yield descriptors, "SK", "EK", "NK" or "TK" (first character is variable yield descriptor, second character indicates further reduction for percent stand "K").

**Example:** If the percent stand for the block being reported is 75 percent; the applicable T-Yield ("E" 80 percent T-Yield) would be multiplied by 0.75 and reported as "EK".

(2) When YA is elected, the percent stand reduction percentage applies to the YA. For example, the insured qualifies for YA, the applicable T-Yield is 100; the percent stand is 75 percent; multiply the percent stand percentage of 0.75 times the YA of 60 percent for a substituted value of 45.

## 1859 Weighted Average Age/Density

A T-Yield based upon the weighted average age and density is required when different T-Yields apply to an APH database with mixed age and densities and a T-Yield is necessary to complete the APH database.

### A. Weighted Average Age/Density Worksheet

A Weighted Average Age/Density Worksheet is used to calculate weighted average age and density in order to determine the T-Yield when the APH database contains multiple blocks with different set out years (age) and/or density see Exh. 18.

The AIP must complete the Weighted Average Age/Density Worksheet and report APH databases established using weighted average age/densities T-Yields to RMA with the applicable yield indicator "W".

(1) If the actuarial documents do not contain different T-Yields by age/density, the Weighted Average Age/Density Worksheet does not apply.

(2) If T-Yields are not required in the APH database because there are four or more years of actual/assigned yields and YA is not applicable, then the Weighted Average Age/Density Worksheet is not required.

## A. Weighted Average Age/Density Worksheet (continued)

(3) If the Weighted Average Age/Density Worksheet includes acreage that does not meet age requirements, YA when applicable, is determined using the Weighted Average Age/Density Worksheet see Exh. 18.

(4) If acreage contained in the Weighted Average Age/Density Worksheet meets age requirements, YA is available when applicable. YA must use the applicable T-Yield for the crop year being substituted.

(a) For Weighted Average Density, use the average of the current crop year's density to look up the crop year being substituted.

**Example:** The weighted average density in crop year 2019 is 100 trees, the crop year to be substituted is crop year 2012, use the current year's density of 100 trees to look up the 2012 T-Yield in the actuarial documents for YA.

(b) For Weighted Average Age, use the average of the current crop year's age, subtract the crop year receiving YA from the current crop year and reduce the age to find the appropriate YA crop year in the actuarial documents.

**Example:** The weighted average age in crop year 2019 is 15 years, the insured has elected YA for crop year 2012. Current Crop year 2019 – crop year being substituted is 2012 = 7 years. Weighted average 15 years minus 7 years = 8 years as the age for YA in the actuarial documents. If the crop was not at an insurable age for the applicable crop year, then YA does not apply.

(5) If YE is elected and as a result of YE, the APH database falls below 4 years of actuals, then the applicable weighted average T-Yield as determined for the current crop year should be substituted for those years within the most recent 4 years that YE excluded.

## B. Variable T-Yield Percentages

Variable T-Yield percentages apply to T-Yields determined based upon the weighted average age/density and any applicable adjustments for percent stand.

## C. Multiple Plantings and Unknown Tree Counts

When there are multiple plantings and the tree counts are not known use either the most recent year in the range or the most distant year that results in the lowest applicable T-Yield.

## 1860 Added Insurable Acreage

Added insurable acreage is acreage that becomes insurable in the current policy crop year because policy requirements for minimum production and/or age are met.

### A. Acreage Added to an Existing APH Database for certain crops in AZ, CA, HI, and UT Only

Procedure is applicable for: Almonds, Arizona and California Citrus, Figs, Plums, Grapes, Macadamia Nuts, Prunes, Stonefruit, Table Grapes and Walnuts in Arizona, California, Hawaii and Utah.

If the insured provided an acceptable production report by block for the uninsurable acreage, when the acreage becomes insurable it may be added to an existing APH database containing the same unit/P/T/TMA/Other Characteristics. To add acreage to an existing APH database, AIPs must:

(1) verify the existing APH database has a prior year approved APH yield; and

(2) calculate the percentage increase in acreage by dividing the previously uninsurable acres by the existing APH database acres. Use a simple average of the acres in the existing APH database.

If the calculated percentage increase in acreage is:

(a) Less than 70 percent of the existing APH database's insurable acreage, the production from the previously uninsured acreage is excluded from the combined database and the approved APH yield of the previously insured APH database is used, i.e., the previously insured APH database approved APH yield is used for both the added and existing acreage. Once the previously uninsured acreage is combined with the existing APH database, it cannot be removed.

An APH database for the previously uninsurable acreage must be maintained by the AIP for the initial year of insurance to substantiate that the insured kept the uninsurable acreage production records separate and to substantiate that production minimums were attained prior to being added as insurable acreage. This APH database is not transmitted to RMA.

(b) 70 percent or greater than the existing APH database’s insurable acreage, an APH database must be established for the previously uninsurable acreage using variable T-Yields to complete the four year APH database.

The insured must maintain separate APH databases until the added insurable acreage block contains four years of actual/assigned yields, acres and production.

After four years, the added insurable acreage block may be combined with the other APH database with the same unit/P/T/TMA/Other Characteristics.

**A. Acreage Added to an Existing APH Database for certain crops in AZ, CA, HI, and UT Only (Continued)**

If acceptable production report(s) are not provided for the uninsurable acreage, see procedure in Para. 1803.

**B. Acreage Added to an Existing APH Database for All Other Crops and States**

When insurability of the crop acreage is based on age or production minimums being attained, and acreage is added to an existing APH database, the production is considered commingled between insurable and uninsurable acreage.

Actual yields, production and acres from prior years for previously uninsurable acreage (all applicable crop years, not only the crop year when insurability is met) is combined with the insurable acreage; total production divided by total acreage for both insured and previously uninsurable acreage is used for all crop years in the APH database. The commingled production and all acreage are entered in the APH database.

Cups do not apply the initial year acreage is added. YA does not apply for any crop year within the resulting APH database where production from acreage not meeting the insurability minimums and insurable acreage is commingled, unless a weighted average T-Yield applies.

Crops with minimum production requirements may require a RO determined yield. See Para. 1881 for Situations for a RO DY Request.

**C. Acreage Added as a Separate APH Database**

(1) When insurability of the crop acreage is based on age and the crop attained the required age, the following apply.

(a) The insured has the option to establish the APH database using the previous year(s) continuous acceptable production report from underage acreage. An insured may elect this option when actual yields are higher than the T-Yield when the acreage was under the policy age requirements. Production reports must be for consecutive crop years with no break in continuity.

**Example:** The crop reached insurability in 2018, the insured elects to use the 2018 and 2017 actual yields (which are consecutive) and may complete the APH database's base period with the applicable T-Yield.

This acreage and yield must remain in the APH database until excluded by the base period.

**C. Acreage Added as a Separate APH Database (continued)**

(b) The applicable variable T-Yield may be used in place of the actual yield from the underage crop. The approved APH yield is calculated using four variable T-Yields with yield descriptors "SX", "EX", "NX" and "IX" for the annual yield by crop year in lieu of the variable T-Yield descriptors "S", "E", "N", and "T".

If separate acreage and production from the previously uninsurable crop year(s) are provided, such production and acreage is entered in the APH database but does not have the annual actual yield calculated for applicable crop year(s) shown unless the insured elects to use the prior uninsurable annual actual yield(s).

(c) Any prior commingled production and acreage remains with the prior commingled block or unit; however, for at least the most recent year, separate production and acreage must be provided.

(2) When the insurability of the crop acreage is based on production minimums, and acceptable records for such acreage are provided, the actual annual yields submitted for the crop year that the minimum production requirement was met and up to three variable T-Yields are used to calculate the approved APH yield. The qualifying acreage and production must be entered on the APH database.

(a) Any prior production and acreage shown on the APH database, before meeting the production minimum, will not have an actual annual yield for applicable crop year(s)' shown.

(b) Once qualifying actual yields have been submitted which meet production minimums, continuous production reports must be submitted for each subsequent crop year and variable T-Yields will be replaced with actual or assigned yields in subsequent crop years.

(c) Any prior commingled production and acreage remains with the prior commingled block or unit; however, for at least the most recent year, separate production and acreage must be provided.

(3) For crops with age and production minimums, follow the procedure in (1) above. For crops with age or production minimums, follow the procedure in (1) or (2), respectively.

## A. New Producers or Carryover Insureds

New producers or carryover insureds who have recently added land by recently purchasing or leasing perennial crop acreage which meets policy requirements may use the prior producer's records, whether or not that producer continues to share in the crop, when acceptable hard copy records of acreage and production, or claim records are submitted to the AIP by the PRD. If the prior producer's records are not available, then the variable T-Yield will apply. AIPs must use yield descriptors "SX", "EX", "NX" and "IX" for the annual yield by crop year in lieu of the variable T-Yield descriptors "S", "E", "N", and "T".

## B. Production Report Submitted with at least Four Crop Years

When a production report containing at least four years of acceptable production evidence is submitted which meets insurability requirements, establish the APH database using the production reports.

## C. Production Report Submitted with less than Four Crop Years

When acceptable production reports for less than four years are provided, the APH database must be completed as follows.

(1) Variable T-Yields are used to complete the APH database and are determined on an APH Database basis, not a crop/county basis.

(2) The approved APH yield is calculated using four variable T-Yields with yield descriptors "SX", "EX", "NX" and "IX" for the annual yield by crop year in lieu of the variable T-Yield descriptors "S", "E", "N", and "T".

(a) The yield descriptors are used to identify that acceptable production evidence was not provided for the perennial crop, even though a perennial crop would typically have production evidence in previous crop years.

(b) The yields descriptors remain in the database unadjusted and roll out as the most recent four years of actual/assigned yields are provided in subsequent crop years.

(c) The perennial yield descriptors take precedence over any other applicable yield descriptor.

If insurance is requested on added land acreage that is damaged, insurance does not attach. Also, for insureds sharing in the crop with another producer, see Para. 1508.

## 1862 APH Database Tests for High Variability of Actual Yields

### A. Testing Requirement

To determine whether any adjustments to the APH database are warranted, high variability tests are to be performed by the AIP. High variability includes alternate bearing and downward trending patterns.

**Exception:** No review for high variability is required by the AIP when the APH database contains less than four years of actual yields, a break in continuity or a yield descriptor "U".

**Exception:** If any of the actual yields in the most recent three crop years in the APH database is in a crop year that is eligible for yield exclusion in the actuarial documents, the yield variance test in Para. 1862D is not applicable and the APH database is not reduced for alternate bearing. For the yield variance test in Para. 1862E exclude the YE eligible year from the calculation, but still perform the downward trending test.

If any of the most recent 3 crop years "qualify" for YE, then do not conduct the AB testing. Qualify means it is in the actuarial documents as a crop year that the producer could elect for YE (the producer does not have to elect YE, but the crop year must be YE eligible). If none of the most recent 3 crop years "qualify" for YE, then the AIP must conduct the tests for AB.

If there is a YE eligible crop year in years 4-10 in the database (outside of the most recent 3 years in the database), then conduct the AB tests using the actual yields (without YE). If the formula triggers adjustments to the approved APH yield, then make the adjustment to the approved APH yield and if the insured elected YE it will not apply because the adjustment for AB overrides. If insured does not agree with the adjustment, a RO determined yield may be requested.

If the database does not trigger an adjustment, then the AIP should apply YE to the APH database after the AB tests are complete.

**Exception:** Effective for peaches, crops insured under the Stonefruit Crop Provisions, figs, table grapes; and grapes; AIPs will test APH databases for high variability as required in Para. 1862C, D and E. However, the approved APH yield will not be adjusted by the formula for alternate bearing as provided in Para. 1862D(1) and (3)(e).

The downward trending test continues to apply for crops insured under the Stonefruit Crop Provisions, figs, table grapes, and grapes. However, Peaches (0034), Para. 1862E(2), will not be adjusted for downward trending unless the requirements in Para. 1862G are met.

## B. APH Database Review

If the APH database:

(1) meets the following tests in C, D or E then the high variability adjustments as specified in those respective sections applies; the APH database is not qualified for YA or Cups; and the AIP must conduct a PAIR.

(2) does not meet the following tests C, D or E then the high variability adjustment to the APH database does not apply.

In conducting the high variability testing, the rounding is according to APH yield per-acre rounding rules for the crop, to the nearest bushel, box, pound, etc.; multiplied by any applicable factor and then rounded again to the nearest bushel, box, pound, etc.; at each applicable step.

## C. Yield Variance Test

| STEP | ACTION |
|---|---|
| **1** | Calculate the average APH yield. |
| **2** | Determine the number of actual yields that are less than 75 percent of the average APH yield. |
| **3** | Compare the number of actual yields that are less than 75 percent of the average APH yield to the number of actual yields contained in the APH database. Determine whether the comparison meets the requirements in the following chart. |
| **4** | Determine whether one of the actual yields, that were less than 75 percent of the average APH yield, occurred during the most recent three crop years. |

| NUMBER OF TIMES THE ANNUAL ACTUAL YIELD IS LESS THAN 75 PERCENT OF THE AVERAGE APH YIELD | NUMBER OF YEARS OF ACTUAL YIELDS CONTAINED IN THE APH DATABASE |
|---|---|
| 2 or more | 4 - 5 |
| 3 or more | 6 - 7 |
| 4 or more | 8 - 10 |

If the APH database does:

(1) not meet the requirements in step 3 and 4, no further APH database tests are conducted and no adjustment for high variability is required.

(2) meets the requirements in step 3 and 4, AIPs must conduct the Alternate Bearing and Downward Trending tests to determine whether the APH database should be adjusted. The AIP must conduct a PAIR if one has not been performed or if the most recent PAIR is more than five years old.

**Exception:** An assuming AIP may use a ceding AIP's PAIR when provided by the ceding AIP.

## D. Alternate Bearing Tests

If the requirements in C (step 3 and 4) were met, AIPs must review the APH database to determine if the APH database meets the following tests for alternate bearing.

Calculate an average APH yield using the most recent five years in the APH database. AIPs may use the most recent four years when five years are not available. Use this calculated average APH yield to determine if the APH database meets the following alternate bearing tests for adjustment of the approved APH yield.

(1) Test 1a, for crops without a lag year:

| ACTUAL YIELD FOR: | PERCENTAGE OF THE CALCULATED AVERAGE APH YIELD |
|---|---|
| most recent crop year (yield year 1) | Equal to or greater than 125 percent of the calculated average APH yield |
| the year prior to the most recent year (yield year 2) | Less than or equal to 75 percent of the calculated average APH yield |
| two years prior to the most recent year (yield year 3) | Equal to or greater than 125 percent of the calculated average APH yield |
| three years prior to the most recent year (yield year 4) | Less than or equal to 75 percent of the calculated average APH yield |

**Example:** The calculated average APH yield using the most recent five years in the APH database is 800.

| CROP YEAR | YIELD |
|---|---|
| 2018 (Most Recent) | 1200 (≥ 125% of average) |
| 2017 | 200 (≤ 75% of average) |
| 2016 | 1200 (≥ 125% of average) |
| 2015 | 200 (≤ 75% of average) |
| 2014 | 1200 |

When the APH database meets these requirements, the AIP must adjust the APH database as follows:

**D. Alternate Bearing Tests (Continued)**

| STEP | ACTION |
|---|---|
| **1** | Multiply the average yield for the most recent four years in the database by 0.5 |
| **2** | Multiply the average yield of the two lowest yearly yields in the most recent four years of the database by 0.5 |
| **3** | Sum the results of steps 1 and 2 for the approved APH yield, the AIP must use special case yield indicator "AF" |

(2) Test 1b, for crops with a lag year, Citrus, Avocado, and Macadamia Nuts.

| ACTUAL YIELD YEAR FOR: | PERCENTAGE OF THE CALCULATED AVERAGE APH YIELD |
|---|---|
| most recent crop year's actual yield (yield year 1) | Equal to or less than 75 percent of the calculated average APH yield |
| the year prior to the most recent year (yield year 2) | Greater than or equal to 125 percent of the calculated average APH yield |
| two years prior to the most recent year (yield year 3) | Less than or equal to 75 percent of the calculated average APH yield |
| three years prior to the most recent year (yield year 4) | Greater than or equal to 125 percent of the calculated average APH yield |

When the APH database meets these requirements, the AIP must adjust the APH database as follows:

| STEP | ACTION |
|---|---|
| **1** | Multiply the average yield for the most recent four years in the database by 0.5 |
| **2** | Multiply the average yield of the two lowest yearly yields in the most recent four years of the database by 0.5 |
| **3** | Sum the results of steps 1 and 2 for the approved APH yield, the AIP must use special case yield indicator "AF" |

(3) Test 2a, for crops without a lag year.

**D. Alternate Bearing Tests (continued)**

| ACTUAL YIELD YEAR FOR: | PERCENTAGE OF THE CALCULATED AVERAGE APH YIELD |
|---|---|
| most recent crop year's actual yield (yield year 1) | Less than or equal to 75 percent of the calculated average APH yield |
| the year prior to the most recent year (yield year 2) | Greater than or equal to 125 percent of the calculated average APH yield |
| two years prior to the most recent year (yield year 3) | Equal to or less than 75 percent of the calculated average APH yield |
| three years prior to the most recent year (yield year 4) | Greater than or equal to 125 percent of the calculated average APH yield |

**Example:** The calculated average APH yield using the most recent five years in the APH database is 600.

| CROP YEAR | YIELD |
|---|---|
| 2018 (Most Recent) | 200 (≤ 75% of average) |
| 2017 | 1200 (≥ 125% of average) |
| 2016 | 200 (≤ 75% of average) |
| 2015 | 1200 (≥ 125% of average) |
| 2014 | 200 |

When the APH database meets these requirements, the higher of the APH database average APH yield or the most recent four-year per-acre average will be used for the approved APH yield. AIPs must submit the APH database with special case yield indicator "AF", also see Exh. 22.

(4) Test 2b, for crops with a lag year, Citrus, Avocado, and Macadamia Nuts.

**D. Alternate Bearing Tests (continued)**

| ACTUAL YIELD YEAR FOR: | PERCENTAGE OF THE CALCULATED AVERAGE APH YIELD |
|---|---|
| most recent crop year's actual yield (yield year 1) | Equal to or greater than 125 percent of the calculated average APH yield |
| the year prior to the most recent year (yield year 2) | Less than or equal to 75 percent of the average APH yield |
| two years prior to the most recent year (yield year 3) | Greater than or equal to 125 percent of the calculated average APH yield |
| three years prior to the most recent year (yield year 4) | Less than or equal to 75 percent of the calculated average APH yield |

When the APH database meets these requirements, the higher of the APH database average APH yield or the most recent four-year per-acre average will be used for the approved APH yield. AIPs must submit the APH database with special case yield indicator "AF", also see Exh. 22.

APH databases that meet the requirements in (1), (2), (3), or (4) above must be submitted to PASS with special case yield indicator "AF" to show they are adjusted by the alternate bearing formula. YA or cups are not applicable. Do not apply additional downward trending test in E below.

In lieu of the procedures in (1), (2), (3), or (4) above, the RO may issue RO UG that waive the alternate bearing adjustments. AIPs must identify APH databases that met the Alternate Bearing testing but adjustments were waived by RO Underwriting Guidelines with special case yield indicator "D" to show that alternate bearing criteria were met but that no adjustment by formula was made and modification done by RO UG.

Alternatively, the RO may issue RO UG that modify the alternate bearing adjustment. AIPs must identify APH databases that met the Alternate Bearing test but adjustment was modified by RO UG with special case yield indicator "F", also see Exh. 22.

**E. Downward Trending Test**

If the requirements in (C) above were met and the requirements in (D) above were not met, AIPs must review the APH database to determine whether it meets the following test for downward trending.

Although the alternate bearing test was not applicable to crops insured under the Stonefruit Crop Provisions, figs, table grapes, or grapes; AIPs must continue to apply the downward trending test.

**E. Downward Trending Test (Continued)**

Calculate the average yield of the three most recent actual yields in the APH database, then divide the average yield of the three most recent actual yields in the APH database by the average yield of all actual yields in the APH database.

(1) If the result of this calculation is greater than 0.75, then no adjustment to the APH database is applicable; or

(2) If the result of this calculation is less than or equal to 0.75, then multiply the average APH yield for the entire APH database by 0.80 to determine the approved APH yield. The AIP must submit these APH databases with special case yield indicator "DF" to show they are adjusted by the downward trend formula. YA or cups are not applicable. Also see Exh. 22.

The RO may issue RO UG that waives the downward trending adjustment. AIPs must identify APH databases that met the Downward Trending test but adjustments were waived by RO UG with special case yield indicator "D" to show that downward trend criteria were met but that no adjustment by formula was applicable.

Alternatively, the RO may issue RO UG that modify the downward trending adjustment. AIPs must identify APH databases that met the Downward Trending test but adjustment was modified by RO UG with special case yield indicator "F".

**F. Inappropriate Adjustments**

Since the insured reports production by the PRD, the AIP must have sufficient time to conduct the AB/DT testing on the APH database; therefore, within 30 days of notification from the AIP (the AIP must provide the notification timely to the insured to allow sufficient time for the RO DY to be submitted within the 60 day RO DY deadline), an insured can show that high variability yield adjustment for alternate bearing or downward trending by the formulas in C, D, E above, or as otherwise provided in the RO UG was not appropriate, a request for a RO Determined Yield may be submitted through the AIP to the RO. See Para. 2212A(3) for RO Determined Yield Request.

**G. High Variability Adjustments for Peaches**

For peaches (insured under both the peach and stonefruit crop provisions) only, if an APH database meets the high variability testing requirements and at least or greater than 50 percent of the trees in the APH database are 11 years of age or older (12th leaf +), a PAIR see Para. 1838 must be completed by the AIP in the current crop year. If the PAIR identifies situations that may affect the crop's production potential, requests for Regional Office Determined Yields are required per Para. 1838.

If the same APH database continues to trigger the high variability testing requirements in subsequent years, the AIP must verify that the orchard conditions have not changed since the most recent PAIR and if there have been no additional changes that would affect the crop's production potential, then the AIP does not need to complete a PAIR.

## 1863 Approved APH Yield

AIPs are required to calculate, approve, and verify APH yields for all Category C APH crops.

The approved APH yield may be different from the simple average due to one or more of the following reasons.

(1) RO Determined Yield. See Part 18, Sec.9.
(2) Yield Substitutions (YA) are applied. See Part 15, Sec. 3.
(3) Yield Exclusions (YE). See Part 15, Sec. 4.
(4) Cups (YC). See Part 15, Sec. 5
(5) Yield Reductions. See Part 15, Sec. 6.
(6) AIP Adjustments by formula contained in this Section or RO UG.

## 1864 Establishing APH Databases for Grafted Apples in the States of Idaho, Oregon and Washington

Post-grafted acres must meet CP insurability requirements prior to insurability.

In lieu of submitting a request for RO Determined Yield, AIPs are authorized to determine the approved APH yield for APH databases when:

(1) the acreage in the APH database has been completely grafted; or

(2) less than 20 percent of acreage in the APH database is partially grafted (including either partial trees or partial acreage); and

(3) the insured has kept production records separate for the grafted acreage.

AIP must establish a new APH database for the completely grafted acreage using three or less "F" yield descriptors and at least one actual yield. The actual yield is required to ensure that production minimums, according to the policy provisions, have been met following grafting. The "F" yield descriptor is determined by using the applicable T-Yield multiplied by the percentage in the following chart for the appropriate acreage density and year(s) after the acreage was grafted:

| Density (trees/acre) | 1st year after grafting | 2nd year after grafting | 3rd year after grafting | 4th year after grafting | 5th year after grafting |
|---|---|---|---|---|---|
| 0-299 | 0 % | 30 % | 60 % | 90 % | 100 % |
| 300 & greater | 10 % | 50 % | 70 % | 100 % | 100 % |

***Note:*** *If the insured has less than 4 years of actual yields for the crop/county, then the variable T-Yield percentage is also applied to the grafted acreage T-Yield.*

The applicable T-yield is determined by using the T-Yield obtained from the actuarial documents for the LEAF YEAR and SET OUT YEAR of the initial planting. If the scion is of a different insurable type, use the applicable T-Yield for the scion's type for the LEAF YEAR AND SET OUT YEAR of the initial planting.

In subsequent crop years, AIPs will continue to use this table to update the value used in the APH database (identified by the "F" yield descriptor) until the APH database contains a minimum four years of actual yields.

While "F" yield descriptors are used in the APH database, weighted average T-yields do not apply.

When YA and/or YE are elected by the insured, they only apply to any actual yields and must use the grafted date to determine the applicable T-Yield. AIPs must submit to PASS the applicable T-Yield for YA using the grafted age/density.

Exh. 18O provides APH database examples for this procedure.

When the "F" yields are replaced with at least 4 years of actual yields in subsequent crop years for the grafted acreage, these procedures no longer apply.

**Note:** The APH database submission to PASS must contain BOTH the year and month for grafting and the original set out for the trees. The APH database established prior to grafting is not submitted to PASS it is only maintained at the AIP level. APH databases with adjusted T-yields for grafted acreage must be submitted to PASS with Yield Descriptor F until all F Yield Descriptors are rolled out, in subsequent crop years, and replaced with four years of actual yields.

**Exception:** Insureds, through the AIP, must still request a RO Determined Yield for acreage (1) where 20 percent or more of the acreage within the APH database is partially grafted (meaning only a portion of each tree is grafted or partial acreage) and/or (2) when the insured did not keep grafted acreage production in a separate APH database from non-grafted acreage. AIPs must conduct a post-grafting PAIR and submit a RO Determined Yield request to the Spokane Regional Office. See Para. 2212. This procedure no longer applies 4 years following the grafting date.

**1865-1870 (Reserved)**

## Section 7 Yield Information

### 1871 Yield Indicators

Yield Indicators and Special Yield Indicators are used to identify the APH database approved APH yield.

### 1872 Yield Adjustments

If the RO determined yield contains substitutions applied by the RO or AIP approved yield with adjustment for percent stand according to procedures, AIPs must transmit the applicable special case yield indicator and yield limitation flag to RMA, see Exh. 22 and Appendix III for instructions regarding data transmission.

### 1873 Floors

Yield floors are not authorized.

### 1874 Cups

Cups may be authorized, when YC elected by the SCD. The cup prevents the approved APH yield from decreasing by more than 10 percent compared to the prior year's approved APH yield. See Part 15 Sec. 5

### 1875-1880 (Reserved)

## 1881 Situations for a RO Determined Yield Request

A RO Determined Yield may be requested for the following situations.

**Note:** Floors, Cups, and YE are not applicable to RO Determined Yield requests; YA will apply, as authorized by the RO for specific situations.

Exh. 22 provides each type of RO Determined Yield, the applicable rate yield and yield limitation flag; and whether YA or YE apply.

### A. Higher Yield Requests

A greater yield than the average APH yield is requested by the insured with reasonable cause (e.g., acreage in production not meeting the crop minimums, almonds in production that are less than six years after set out, or added land), see Para. 1860. The request must be in writing and signed by the insured.

Use special case indicator "H" for APH databases identified by this criteria.

### B. Productivity is Reduced

PAW triggers for reduced production, see Para. 1823. Identify the RO Determined Yield for APH databases identified as meeting these criteria with the special case yield indicator "R".

### C. Change in Practice or Production Methods

PAW triggers for change in practice or production methods, see Para. 1823. Use special case yield indicators for APH databases identified by these criteria.

N: Non-conventional Farming Practice
NS: Non-conventional/Sustainable Practice
P: Category C & Pecan Revenue
PM: Category C & Pecan Revenue

### D. Irrigation Supply is Not Adequate

PAW triggers for irrigation supply, see Para. 1823. Identify APH databases meeting this criteria with special case yield indicator "I".

**E. Unusual Cases**

Unusual cases submitted to the RO must mark the "other" box on the RO Determined Yield Request form. Unusual cases include:

(1) Questionable records for a determination of acceptability;

(2) Requests to use records prior to a break in continuity of records;

(3) Requests for the RO to determine and approve an APH yield for perennial crop acreage that have not reached the specified age, produced the required amount, or have an insufficient stand if expressly allowed by the CP (e.g., figs, walnuts, almonds, plums, etc.) when the AIP agrees in writing, see WAH Para. 76G;

(4) Request for additional yield adjustment or insurability determination where uninsurable acreage has been commingled to meet insurability requirements;

(5) Change in practice where prior history for the practice is not available to meet insurability requirements (e.g., blueberries from non-irrigated to irrigated);

(6) Florida Avocados only: when production reports are not provided, assigned yields do not apply and requests must be submitted to the RO; or

(7) Other situations authorized by RMA in policy or procedure.

Use special case indicator "PB" for APH databases identified by any of these unusual cases described above.

**F. High Variability Yield Adjustment**

A RO Determined Yield request can be submitted to the RO if an insured can show that high variability yield adjustments for alternate bearing or downward trending are not appropriate.

A RO Determined Yield is required for Peach (crop code 0034) APH database(s) that meet the high variability testing requirements and at least, or greater than, 50 percent of the trees in the APH database are 11 years of age or older when the PAIR identifies situations that may affect the crop's production potential.

Use special case indicator "AF, DF, D, or F" (as directed in Exh. 22) for APH databases identified by this criteria.

## 1881 Situations for a RO Determined Yield Request (Continued)

### G. Underage Crop

Use special case indicator "UC" for APH databases where the crop is younger than the age requirement provided in the policy or special provision statement(s).

### H. Minimum Production Requirement

Use special case indicator "M" for APH databases that do not meet the required production minimums (e.g., Stonefruit that has not produced at least 200 lugs of fresh market production in at least one of the four most recent APH crop years), specified in the policy or special provision statement(s).

## 1882 Verifier Responsibilities

AIPs must notify each affected insured of the approved APH yield(s) no later than 25 calendar days after issuance of the approved APH yield by the RO. AIPs must document the date the insured was notified of the approved APH yield to verify timely notification of approved APH yields.

## 1883-1900 (Reserved)

# PART 19 ADDITIONAL PROVISIONS BY CROP
## Section 1 Category B Crops

### 1901 General Information

The following procedures provide additional information and exceptions for determining insurability, determining production for APH purposes, acceptable supporting documentation, and special procedures for specific crops/P/T. For crops with quality adjustment provisions, refer to LAM and applicable LASHs when determining production for APH purposes. Production for APH purposes is reported with applicable adjustments according to Para. 1403B.

### 1902 Cabbage (Fresh Market and Processing)

**A. Insurability Requirements**

(1) The insured must provide a copy of all processor contracts to the AIP on or before the ARD for processing cabbage.

(2) See the applicable SP statement that limits liability if the insured plants more than 125 percent of the highest acreage planted in any one of the most recent three crop years. This limitation will not apply to an acreage increase of five or less acres or to any acreage of processing cabbage under contract.

(3) Insureds are responsible for providing written documentation of acreage data to the agent/AIP representative. Use this acreage data to calculate the yield conversion factor, which is in the SP, to determine the production guarantee. The documentation must be submitted at the time of application for new insureds, or by the SCD for carryover insureds, and must include one of the following:

(a) copies of cabbage acreage reports previously recorded for crop insurance purposes;

(b) copies of acreage reports previously recorded at FSA (such as a Form FSA-578); or

(c) letters on official letterhead signed and dated by the CES Office's Extension Agent for each county where cabbage was grown. The letter must contain the insured's name, address, county name where the cabbage was grown, and acreage of cabbage grown by crop year. Examples of acceptable documentation of acreage evidence for these letters include planting/transplanting records (such as seed or transplant receipts, fertilizer and pesticide receipts).

**A. Insurability Requirements (continued)**

(4) The AIP must notify the insured of any reduction in the production guarantee no later than 30 calendar days after the ARD. The AIP's calculations of the yield conversion factor must be in writing and dated. The AIP must place copies of the prior years' acreage and the calculation of the yield conversion factor documentation in the insured's official file. The AIP must enter the appropriate yield conversion factor on the acreage report in the remarks section (to three decimal places). If the yield conversion factor is 1.000 or above, use 1.000 in the calculation of the approved production guarantee and report 1.000 as the yield conversion factor on the acreage report.

**B. Determining APH Production**

(1) BUs may be further divided by planting period. OUs may be established by type when separate types are provided in the SP. Convert prior APHs to the applicable unit structure.

(2) In addition to the New Producer requirements in Part 17 Sec. 5, the applicable New Producer statement in the SP will apply.

**C. Acceptable Production Evidence**

(1) Sold or delivered production at the time of harvest must include cabbage sold for fresh market and/or processing cabbage.

(a) Fresh Market Cabbage acceptable production evidence must include settlement sheets that show the pack-out weight (weight of packed cabbage for which the insured is paid).

(b) Processing Cabbage acceptable production evidence must include settlement sheets that show the weight for which the insured is paid.

(2) Acceptable production evidence for cabbage when farm management records are used to support production reports must be substantiated by records from a marketing outlet, processor, packer, first handler, etc. Third party verification of farm management records may be required by the AIP and/or RMA. Convert boxes, bags, cartons, tons, or other measures of production to hundredweight (one hundred pounds avoirdupois).

**Example:** Settlement sheet shows 100 boxes, bags, cartons or crates at 50 pounds: 100 X 50 lbs. = 5,000 lbs. ÷ 100 = 50 cwt.

**Example:** Settlement sheet shows 15.8 Tons: 15.8 X 2,000 lbs. = 31,600 lbs. ÷ 100 = 316 cwt.

**C. Acceptable Production Evidence (continued)**

(3) Farm stored production records are required that show the gross weight of stored cabbage if an inspection is not made prior to cabbage being placed in storage. Provide a copy of the weight slips and production measurements. See LAM for acceptable records/weight tickets.

(4) For direct-marketed production as provided by the SP, follow acceptable production evidence guidelines in Para. 1421.

(5) For unharvested acreage of Processing Cabbage, follow the procedure for processing beans in Para. 1916.

## 1903 Coarse Grains: Corn, Soybeans, and Grain Sorghum

**A. Insurability Requirements**

(1) For corn, the following corn varieties are insurable under the coarse grains policy using rates published in the actuarial documents: white, yellow, or mixed yellow/white corn, including waxy and high-lysine corn, predominate mixtures of high yielding yellow dent female plants with high-oil pollinators (at least 90 percent female and 10 percent male pollinators), and commercial varieties of high-protein hybrids. Separate APH databases by variety are not required.

WAs are required, available only for additional coverage policies, to insure all other special purpose corn including: high-amylose, high-oil or high-protein varieties not meeting the above requirements, flint, flour, Indian, blue, varieties genetically adapted for wildlife purposes, and other open pollinated corn (unless provided otherwise on actuarial documents).

(2) For grain sorghum, the crop insured will be all of the grain sorghum in the county that is:

(a) planted for harvest as grain;

(b) a combine-type hybrid grain sorghum (grown from hybrid seed); and

(c) not a dual-purpose type of grain sorghum (a type used for both grain and forage). WAs are required, available only for additional coverage policies, to insure dual-purpose types of grain sorghum.

(3) For soybeans, the crop insured will be all of the soybeans in the county that are planted for harvest as beans. If provided on the SP, specialty type soybeans may be insured based on a contract price. The insured must provide a copy of the specialty type soybean contract to the AIP by the ARD.

**B. Determining APH Production**

(1) For corn APH purposes, harvested production will be determined in bushels for acreage harvested as grain and in tons (to the nearest tenth) for acreage harvested as silage; however, the harvested production may require conversion to the type that is insured.

Harvested corn production with acceptable records may be converted from tons to bushels and vice versa using the bushels/tonnage conversion factor when necessary to provide records that are consistent with the type insured. To convert bushels to tons, multiply bushels times .15 and round to the nearest one-tenth ton (for example, 5,000 bushels X .15 =750.0 tons). To convert tons to bushels, divide tons by .15 and round to the nearest whole bushel (for example, 750 tons / .15 = 5,000 bushels).

The appraisal instructions that follow in (3), (4) and (5) are for APH purposes only. If an appraisal is required to document the production to count for a claim for indemnity, including losses due solely to a revenue component, AIP must follow the appraisal instructions contained in the Corn LASH.

Insureds must obtain appraisals from their AIP or another qualified person by unit for APH record purposes when insured acreage:

(a) will be harvested and the insured will not be able to maintain/provide acceptable records of the production, such as high moisture grain chopped for silage or forage production stored in an airtight structure;

(b) of corn in a grain-only or silage-only county will be harvested as either grain or silage and less than 50 percent of the acreage will be harvested as the type insured (such as grain in grain-only counties) and acceptable records will not be maintained for the harvested production of the other type (such as silage in a grain-only county); or

**Example:** 100 acres of corn are reported in a grain-only county on the unit. The insured will harvest 40 acres as grain, maintain/provide the grain records, and harvest 60 acres as silage.

However, if the insured will not be able to maintain/provide acceptable silage production records, an appraisal is required for APH purposes for the acreage that will be harvested as silage. Otherwise, the insured will not have acceptable records for the unit and assigned yields will apply see (2) and (3) for APH instructions.

**B. Determining APH Production (continued)**

(i) If 50 percent or more of the acreage is harvested as the type insured (grain in grain only counties or silage in silage only counties) and acceptable production records are maintained/provided for the insured type, then an appraisal is not required for APH purposes for the acreage harvested as the other type (such as silage in a grain-only county).

Enter the harvested actual average yield for the type insured (grain in a grain-only county) in the unit's database and use to calculate the APH yield.

(ii) Exception to the 50 percent rule. If the harvested production for the type for which records will be maintained (such as grain/IRR) is for a different practice than the acreage for which acceptable records will not be maintained/provided (such as silage/NIRR), then an appraisal is required for the acreage for which acceptable records will not be maintained.

**Example:** The unit contains 130 acres of IRR acreage and 28 acres of NIRR acreage and is insured in a grain-only county. The insured will maintain/provide records for grain harvested from the IRR acreage.

However, the 28 acres of NIRR corn will be harvested as silage. To have acceptable records for the unit, the insured will have to either maintain/provide acceptable records for the NIRR acreage or have the acreage appraised and use the appraisal for the NIRR practice.

(c) of corn in grain and silage counties and acreage will be harvested as either grain or silage and acceptable records will not be maintained/provided for the type(s) insured (grain and/or silage).

(2) For corn, grain-only counties are counties for which the actuarial documents only provide a grain type. Unless a valid WA authorized by the RMA RO provides silage coverage, insure and report all insurable corn acreage as grain on the acreage report. A variety of corn adapted for silage use only is not insurable as grain. Do not use the acres and production from such acreage for APH purposes unless such silage production is commingled with production from insurable acreage harvested as silage.

(a) Approved APH Yields/APH appraisals are on a bushel (grain) basis. Use provided acceptable production reports on a grain or silage basis for APH yield calculation purposes. Convert silage production (tons) to bushels of grain.

**B. Determining APH Production (continued)**

(b) Appraisals which indicate potential production in bushels are required for APH purposes when less than 50 percent of the acreage on the unit will be harvested as grain and acceptable records will not be maintained/provided for the acreage harvested as silage; or, if at least 50 percent of the acreage will be harvested as grain and acceptable records will not be maintained/provided for the acreage harvested as grain. See B(1)(b)(ii) for additional instructions.

(c) If an indemnity is claimed, the production (except for uninsured cause of loss appraisals) from the claim (in bushels) must also be used for APH.

(d) When at least 50 percent of the acreage is harvested as grain and acceptable production reports are provided for the acreage harvested as grain, if acceptable records were not maintained/provided for the acreage harvested as silage, use the harvested grain actual yield and acreage to calculate the unit's approved APH yield. See B(1)(b)(ii) for exceptions to the 50 percent rule.

(e) If a WA provides silage coverage and all acreage is insured as silage, see B(3)(a) and (b). If some of the acreage is insured as grain and some is insured as silage, see B(4)(c) below.

(3) For corn, silage-only counties are counties, for which the actuarial documents only provide a silage type. Unless a valid WA authorized by the RMA RO provides grain coverage, insure and report all insurable corn acreage as silage on the acreage report.

(a) Approved APH Yields and APH potential production appraisals are on a tonnage basis. Use provided acceptable production reports on a grain or silage basis for APH yield calculation purposes. Convert grain production to tons.

(b) Appraisals which indicate potential production in tons are required for APH purposes when less than 50 percent of acreage on the unit will be harvested as silage and acceptable records will not be maintained/provided for the acreage harvested as grain; or, at least 50 percent of the acreage will be harvested as silage and acceptable records will not be maintained/provided for the acreage harvested as silage. See B(1)(i) for instructions.

(c) If an indemnity is to be claimed and the acreage will be harvested as grain, the SP requires tonnage appraisals. Use the production from the claim (except for uninsured cause of loss appraisals) for APH.

(d) When at least 50 percent of the acreage is harvested as silage and acceptable production reports are provided for the acreage harvested as silage, and if acceptable records were not maintained/provided for the acreage harvested as grain, use the harvested silage actual yield and acreage to calculate the unit's approved APH Yield. See B(1)(ii) for exceptions to the 50 percent rule.

**B. Determining APH Production (continued)**

(e) If a WA provides grain coverage and all acreage is insured as grain, see B(2)(a) and (b) above. If some of the acreage is to be insured as grain and some as silage, see B(4)(c) below.

(4) For corn, grain and silage counties are counties for which the actuarial documents provide both grain and silage types. Both types are insurable. Insureds must report insurable acreage by unit and by type (grain or silage) according to the intended method of harvest; however, a variety of corn adapted for use as silage only is not insurable as grain and must be insured as silage.

(a) If all insurable acreage is insured as grain, see B(2)(a) and (b) above for approved APH yield and APH appraisal instructions.

(b) If all insurable acreage is insured as silage, see B(3)(a) and (b) above for approved APH yield and APH appraisal instructions. See B(1)(b)(i) which is applicable in counties for which the SP requires tonnage appraisals for claim purposes if NIRR acreage insured as silage is to be harvested as grain.

(c) Establish a separate APH database for grain and for silage when some of the acreage on the unit will be insured as grain and some will be insured as silage.

For each crop year that separate acceptable production records are available for grain and/or for silage, use the grain actual yields to calculate the approved APH yield for grain and the silage actual yields to calculate the approved APH yield for silage (by unit and IRR and NIRR practices).

For a crop year with only one type of production (silage or grain), complete the other type's APH database using zero planted acreage procedures. The production for the type harvested is not converted and entered in the other type's APH database.

(i) An appraisal is required if acceptable production records of either type will not be maintained.

(ii) In counties for which the actuarial documents contains premium rates for NIRR silage but does not provide premium rates for NIRR grain unless a WA has been approved to insure such acreage as grain, all insurable NIRR acreage will be insured as NIRR silage. If a loss is to be claimed on acreage insured as NIRR silage which will be harvested as grain, such acreage must be appraised in tons (as silage).

(iii) For carryover insureds with established APH databases:

**B. Determining APH Production (continued)**

(A) if the type for which the APH databases were established, on a unit basis, is the same type as insured for the current crop year, update the APH database with the most recent APH crop year's production history using applicable procedures. It is not necessary to make adjustments/conversions to prior production history;

(B) if a different or additional type (applicable in grain and silage counties), on a unit basis, is insured for the current crop year than the type for which the APH database was established:

1 if the entire unit is insured as grain for the current crop year, and the previous year's APH database was established on a silage basis, convert any actual and/or assigned yields to bushels and establish an APH database for grain; or

2 if the entire unit is insured as silage for the current crop year, and the previous year's APH database was established on a grain basis, convert any actual and/or assigned yields to tons and establish an APH database for silage.

(C) if both grain and silage is insured on the same unit, and the previous production history indicates type, use the grain actual yield(s) to calculate the approved APH yield for grain and the silage actual yield(s) for silage. If records are for one type, convert any actual and/or assigned yields to the other type and establish an APH database for the other type.

(5) For grain sorghum, separate production reports and APH databases are required for practices specified in the actuarial documents and skip-row planting patterns when applicable.

(6) For skip-row corn and grain sorghum, see Part 11 Section 3 for special production reporting instructions for skip row planted crops.

## 1904 Cotton and ELS Cotton

**A. Production Lost to Fire Before Being Ginned**

If a claim for indemnity was not filed, harvested production in modules that was lost due to fire before it was ginned (such as modules burned in the field or after delivery to the gin) may be reported for APH purposes if the insured certifies the production and gin/fire insurance records/other measurements and the lost production can be accurately documented.

**A. Production Lost to Fire Before Being Ginned (Continued)**

(1) Gin/fire insurance records indicating the net pounds of production lost (by unit), may be used as production evidence to document the production and number of modules lost.

(2) If the modules were burned prior to weighing or tagging and the gin/fire insurance records are not applicable, module measurements taken prior to the destruction of the modules may be used. The size and number of modules lost must be documented in a manner that is acceptable to the AIP.

Specifications provided by the insured of the module maker(s) used to make the modules that were lost may be used to verify the size of modules reported. If module or trailer measurements are used to document such production, the net pounds of cotton production must be determined according to the instructions contained in the Cotton LASH.

**B. Establish or Update an APH Yield**

Separate production reports are required to establish or update an APH yield for cotton and ELS cotton.

**C. Skip-Row Cotton**

Convert cotton planted in a skip-row pattern to a solid planted basis to provide an APH yield to use for solid planted or any skip-row pattern the insured may carry out. See Para. 1148 for production reporting and conversion instructions for NIRR skip-row cotton or ELS cotton.

## 1905 Cultivated Wild Rice

**A. Insurability Requirements**

Cultivated wild rice is insured only under a flood irrigated practice.

**B. Determining APH Production**

(1) Adjust mature green cultivated wild rice by percent recovery from green weight to finished weight.

(a) Convert green weight production to finished weight by multiplying it by the percent recovery determined by an independent laboratory.

(b) In the absence of percent recovery determined by an independent laboratory, use the percent recovery published in the SP.

**B. Determining APH Production (Continued)**

(2) Count harvested production for seed as production for APH yield purposes. Adjust production as described in B(1). Cold storage records or scale receipts showing the number of pounds of seed is acceptable. In converting volume measurements to pounds of seed use a factor of 20.0 for Minnesota and 23.2 for California.

**C. Acceptable Supporting Documentation**

To be acceptable, settlement, ledger, and assembly sheets must show green weight production in pounds and percent recovery. Storage records must show pounds or if stored in bins number of bins and pounds per bin.

## 1906 Dry Beans

**A. Insurability Requirements**

(1) A dry bean policyholder must insure all insurable dry bean types and contract seed beans in the county.

(2) One level of coverage applies to all types of dry beans and contract seed beans on a policy/county.

(3) Price elections for dry beans may vary by type when the actuarial documents provides different price elections by type. For contract seed beans, the insured may select one price election ranging from 60 percent through 100 percent of the contract price.

(4) "Type" is synonymous with "class" as used in the U.S. Standards for Beans; however, there may be more than one variety within a class. Refer to the actuarial documents to determine insurable types.

(5) For contract seed beans (includes Bush varieties for garden seed), a copy of the seed company contract must be on file to show the contract price for each variety grown for the current crop year.

**B. Unit Structure for Dry Beans and Contract Seed Beans**

(1) Acreage planted to dry beans and contract seed beans are separate BUs. For dry beans and contract seed beans, a BU is all insurable acreage of dry beans or contract seed beans in the county in which the insured has:

(a) 100 percent share; or

(b) is owned by one person and operated by another specific person on a share basis.

**B. Unit Structure for Dry Beans and Contract Seed Beans (Continued)**

(2) BUs may be divided into OUs for additional coverage level policies by:

(a) type shown on the actuarial documents;
(b) section, section equivalent, or FSA FN;
(c) IRR and NIRR practices; or
(d) WUA.

(3) OUs are not available for contract seed beans grown under a seed bean processor contract that specifies only an amount of production.

(4) Refer to the examples in Exh. 10D and Part 10, Sections 1 and 2 for additional unit determination instructions.

**C. Determining APH Production**

Production reports must be filed timely for all types of insurable dry and contract seed beans.

(1) Separate yields are required to establish or update an approved APH yield for the following:

(a) insurable dry bean types indicated on the actuarial documents for the current crop year;

(b) TMA;

(c) units; and

(d) IRR and NIRR insurable practices.

(2) All insureds are required to file production reports separately for each insurable type that was grown by unit.

It is not necessary to create an APH database and calculate an approved APH yield for all possible insurable types. However, if a new insurable type is grown which an approved APH yield has not been calculated, see Para. 1787, then the applicable T-Yield(s) for an added type will apply.

(3) For contract seed beans:

**C. Determining APH Production (continued)**

(a) separate APH databases and approved APH yields are required for contract seed types of dry beans, units, different TMAs, and different RYAF areas. The RMA RO furnishes separate RYAF annually. These factors are specific for the contract seed types of dry beans by area and crop year. Annual factors and accompanying memo containing information and directions are mailed to AIP underwriting offices and are also posted on the Spokane RO's website at http://www.rma.usda.gov/aboutrma/fields/wa_rso/ ;

(b) refer to Exh. 17, which includes instructions and examples for converting the APH unit of measure (dollars) into the CP unit of measure (pounds); and

(c) production to count for actual yields will be determined by final settlement sheets specifying pounds of merchantable clean seed, any cull or mill tare poundage, and the price paid or value of the respective production. Refer to the LAM or Crop LASH for more information.

**D. Acceptable Supporting Documentation**

(1) For contract seed beans, acceptable production evidence is final settlement sheets specifying pounds of merchantable clean seed, any cull or mill tare poundage, and the price paid or value of the respective production.

(2) For dry edible beans, acceptable production evidence is settlement, ledger, and assembly sheets that show gross production of dry beans in pounds.

## 1907 Dry Peas

**A. Insurability Requirements**

(1) For contract seed peas, a copy of the seed company contract must be on file to show the contract price for each variety grown for the current crop year.

(2) Levels of coverage for dry peas may vary by type. However, if CAT coverage is elected for any dry pea type, CAT coverage will apply to all types of dry peas on a policy/county.

(3) Price elections for dry peas may vary by type when the actuarial documents provides different price elections by type. The price elections for each type are not required to have the same percentage relationship to the maximum price for each type. For example, the insured may choose 100 percent of the maximum price election for one type and 75 percent of the maximum price election for another type.

**A. Insurability Requirements (Continued)**

(4) For winter pea types in counties for which there is only a spring FPD, a replanting payment is not applicable. When requested on or before the spring SCD and agreed to by the AIP, insurance attaches to fall planted acreage that had an adequate stand to produce a normal crop on the earlier of the spring FPD or the date the AIP agreed to accept coverage for the crop. The fall planted dry pea crop will be insured as a spring planted type.

**B. Unit Structure for Dry Peas and Contract Seed Peas**

In addition to, or instead of, the requirements of establishing separate OUs in Part 10 Section 2, separate OUs may be established for each dry pea type shown on the actuarial documents.

Contract seed peas and dry pea types not grown under a processor/seed company contract may qualify for separate OUs, even if they share a common variety, provided each dry pea type is grown on separate acreage and the production is kept separate.

**C. Determining APH Production**

(1) For contract seed peas, refer to Exh. 17, which includes instructions and examples for converting the APH unit of measure (dollars) into the CP unit of measure (pounds).

(2) For Smooth Green and Yellow, Lentil, and Chickpeas, determine dockage by the applicable loss adjustment methods in effect. Refer to the SPs.

(3) For Austrian Winter Peas, determine dockage by the applicable loss adjustment methods in effect. Refer to the SPs.

(4) For non-contract seed peas and Non-Chick Pea types, in addition to foreign material and thresher run dockage, exclude other damage and defects caused by insurable perils from the gross production, according to the SP. Refer to the SPs.

(5) Dry Pea WCO is available in counties that have both a fall and spring planting date and the actuarial documents provides a premium rate for this coverage. If the WCO is not selected and winter pea types are damaged after the FPD to the extent that producers in the area would not normally further care for it, the acreage must be seeded to an appropriate winter pea type in order for insurance to continue. The production from such acreage will count for the winter pea type.

**C. Determining APH Production (continued)**

(a) If the WCO is elected, an appraisal reflecting the crop's potential production is required to determine production for APH purposes prior to destroying winter pea types or putting it to another use. Use the acres and the appraised potential production to calculate the winter pea type APH yield. See Exh. 9 for a flow chart outlining acres and production used for APH when the WCO has been selected.

(b) Under the WCO, once an appraisal is made and the winter pea type acreage is released, the insured may destroy the winter pea type and plant the acreage to:

(i) another crop; or
(ii) the appropriate spring pea type, and:

(A) insure the spring pea type(s) as separate OU(s). In this case, use the lower of the appraised potential production or winter pea type approved yield for the winter pea APH. Use the acres and production from the spring pea type for the spring type APH, unless the production is commingled with winter pea production (if the production is commingled see C below;

(B) not insure the spring pea type. In this case, use the lower of the appraised potential production or winter pea type approved yield for the winter pea APH. The spring pea type is uninsured and the acres and production are not used for the APH, unless the production is commingled with production from an insured unit (either winter pea types or spring pea types); or

(C) if the spring type production from insured spring pea unit is commingled with winter pea production, consider the spring pea acreage to be a part of the original winter pea unit. Use the acreage originally planted to a winter pea type, the acreage planted to a spring pea type, the lower of the appraised potential production or the winter pea type approved yield for the released acreage, and the spring/winter pea type production for the winter pea type APH.

(c) The late planting period does not apply under the WCO.

**D. Acceptable Supporting Documentation**

(1) For contract seed peas, production to count for yield determination will be final settlement sheets specifying pounds of merchantable clean seed, any cull or mill tare poundage, and the price paid or value of the respective production. See Exh. 19 for additional procedures that:

**D. Acceptable Supporting Documentation (Continued)**

(a) address the Production Computation Statement located on the dry pea SP; and

(b) include examples of how to calculate the approved APH yield and entries required on the acreage report.

(2) For Smooth Green and Yellow, Lentil, and Chickpeas, settlement sheets must show gross production, dockage and net production which grades #1 or better (or adjusted to #1 according to policy provisions).

(3) For Austrian Winter Peas, settlement sheets must show gross production, dockage and net production.

## 1908 Forage Production

**A. Determining APH Production**

(1) When forage is harvested as other than air-dry hay, production to count must be adjusted to the equivalent of air-dry hay.

(2) Separate APH databases are required for different types as indicated in the actuarial documents, such as alfalfa and alfalfa grass mixture.

(3) Separate APH databases are not required for spring and winter planted acreage of the same forage production types.

(4) Forage Production insureds with less than four years of actual records must use the current year's variable T-Yield see Para. 1702.

(5) Yield limitation provisions are applicable, if in effect.

(6) For an added type, calculate the approved APH Yield for the added type using the added P/T procedures see Para. 1702E.

(a) Forage Production initially insured as alfalfa qualifies as an alfalfa grass mixture when:

(i) the percent stand falls below 60 percent alfalfa, see the actuarial documents for percent and additional types; or

(ii) does not meet the age of stand limitations and/or the alfalfa plant count required for alfalfa, see the Adequate Stand/Minimum Required on the SP, but meets the age of stand limitations and alfalfa plant counts required for an alfalfa grass mixture.

**A. Determining APH Production (continued)**

(b) Forage Production initially insured as alfalfa or an alfalfa grass mixture qualifies as:

(i) a grass alfalfa mixture, if available, when the percent of stand falls below 25 percent alfalfa; or

(ii) does not meet the age of stand limitations, or alfalfa plant count required for an alfalfa grass mixture Adequate Stand/Minimum Required, but meets the age of stand limitations and alfalfa plant counts required for a grass alfalfa mixture.

(c) If the insured has not produced the alfalfa grass mixture or grass alfalfa mixture for more than two APH crop years on the unit, added P/T provisions apply.

(i) Determine the number of years of actual/assigned yields for the crop/county for the previously insured type and identify the applicable variable T-Yield percentage.

(ii) Multiply the T-Yield for the new type by the applicable variable T-Yield percentage.

(iii) Establish a four-year APH database for the new type with the resulting variable T-Yield percentage preceded by the yield descriptor code "C".

(iv) Cups do not apply the first year this procedure is applicable.

(7) Refer to the example in Exh. 17 to complete the Forage Production Underwriting Report.

**B. Acceptable Supporting Documentation**

To be acceptable, supporting documentation must show total production (harvested and unharvested) from planted and established acres.

(1) For farm stored production, in addition to the requirements listed in Part 14 regarding acceptable production evidence, the following requirements must be met:

(a) base determinations of harvested production to be counted on weights or measurements and conversion factors consistent with the applicable loss adjustment methods currently in effect;

(b) report and maintain records on a unit/type basis and contain the following:

(i) dates of cutting/harvesting of forage;

**B. Acceptable Supporting Documentation (continued)**

(ii) number of bales harvested; and

(iii) contemporaneous weight of bales from each cutting/harvest. Base bale weight on average of at least 2 bales per cutting/type/unit weighed, dated and signed by a disinterested third party. If weight is unavailable, may use Alternate Method described in Forage LASH.

(c) if contemporaneous records will not be maintained or the production is not measured after being placed in a storage structure, the insured may request an appraisal or inspection/measurement service from the AIP, or other disinterested third party (such as FSA), at the insured's cost prior to harvest or if all production for each cutting/harvest is still available for verification.

(2) In addition to the requirements listed in Part 14, fed records are only acceptable for current year's production (for example, insured cannot provide fed records from 2012 in crop year 2019) for establishing an APH database unless those records can be verified (such as commercial feeder with billing receipts verifying amount of fed production, etc.).

## 1909 Fresh Market Beans

**A. Insurability Requirements**

(1) A fresh market bean policyholder must insure all insurable fresh market bean types in the county for which a premium rate is provided in the actuarial documents and in which the producer has a share.

(2) One level of coverage applies to all types of fresh market beans on a policy/county.

(3) Fresh market beans interplanted with another crop, planted into an established grass or legume, or grown for direct marketing are not insurable, unless allowed by the SP or WA.

(4) The late and prevented planting provisions of the BP are not applicable. To be insurable, fresh market beans must be planted within the planting periods specified in the actuarial documents. Late planted acreage must be reported as uninsurable.

(5) Producers must have grown fresh market beans for at least four crop years in the county in which the crop will be insured.

(6) Added land provisions in Part 17 Section 9 of the CIH do not apply.

**B. Insured Crop**

In accordance with Section 8 of the BP, the crop insured will be all the fresh market beans in the county for which a premium rate is provided in the actuarial documents.

(1) In which the producer has a share;

(2) That are:

(a) Planted to be harvested and sold as fresh market beans;

(b) Planted within the planting periods specified within the actuarial documents;

(c) Grown by a producer who has grown fresh market beans for at least four crop years in the county in which the present crop will be insured; and

(d) That are not (unless allowed by SP or by WA)

(i) Interplanted with another crop;
(ii) Planted into an established grass or legume; or
(iii) That are grown for direct marketing.

**C. Insurable Acreage**

(1) The producer must replant any acreage of fresh market beans damaged during the planting period in which initial planting took place whenever less than 50 percent of the plant stand remains; and

(a) It is practical to replant; and

(b) If, at the time the crop was damaged, the final day of the planting period has not passed. Any acreage of the insured crop damaged before the final planting date, to the extent that most producers in the area would normally not further care for the crop, must be replaced unless the AIP agrees that it is not practical to replant.

(2) Acreage initially planted in any manner other than in rows far enough apart to permit mechanical cultivation will not be insurable unless otherwise provided by the SP.

(3) Insurance will not attach to an acreage that does not meet all applicable rotation requirements contained in the SP.

**D. Acreage Limitation**

Producers can insure a maximum of 110% of the greatest number of acres of planted fresh market beans in which the producer had a share in any of the three previous crop years. If the producer plants more acres than the maximum allowable acreage, the production guarantee (per acre) is reduced by the over-planting factor. If the producer does not plant more acres than the allowable acreage, the over-planting factor will be 1.000, which will not reduce the production guarantee (per acre).

**E. End of Insurance Period**

In addition to the provisions of Section 11 of the BP, coverage ends at the earliest of:

(1) The date harvest should have started on the unit for any acreage that will not be harvested;

(2) 65 days after the date of planting (or replanting, if applicable), unless otherwise provided in the SP; or

(3) The calendar date listed on the SP.

**F. Coverage Levels**

Producers may select a coverage level from 50% (CAT level of coverage) through 75% of their APH yield.

**G. Direct Marketing**

Although any production sold by direct marketing is not insurable, the producer must notify the AIP at least 15 days before any production from any unit will be sold by direct marketing or sold for cash:

(1) The AIP will conduct an initial inspection and appraisal before harvest of any production to be direct marketed or sold for cash; and

(2) If damage occurs, the producer must notify the AIP immediately and the following will apply:

(a) The AIP will conduct an inspection;

(b) The inspection and acceptable production records provided by the producer will be used to determine the amount of production to count;

(c) The producer must continue to care for the crop and the calculation of the production to count specified in section 12 of the Fresh Market Bean Crop Provisions will be suspended until the producer notifies the AIP of the date that harvest first commences or recommences after the damage; and

**G. Direct Marketing (Continued)**

(d) Failure to give timely notice that production will be sold by direct marketing or sold for cash will result in an appraised amount of not less than the production guarantee (per acre) if such failure results in the AIP's inability to accurately determine the amount of production. If the producer fails to give timely notice of a harvest delay, the production to count will not be less than the producer's production guarantee.

**H. Unit Structure for Fresh Market Beans**

In lieu of the definition in the BP, an EU constitutes all insurable acreage of fresh market beans in the county in which the insured has a share on the date coverage begins for the planting period. There is one EU for the spring planting period and a separate EU for the fall planting period, if applicable. Coverage will only be available for EUs unless otherwise specified in the SPs.

**I. Acceptable Supporting Records**

For production that is sold or delivered at the time of harvest, settlement sheets must indicate either gross weight or net sorted weight or graded weight with weight of each grade explicitly included. Settlement sheets, ledger sheets, and assembly sheets must show gross production in thirty pound cartons or in bushels.

**J. Determining APH Production**

In lieu of the definition in the BP, the approved yield is the APH yield used to determine the production guarantee by summing the yearly actual yields and dividing the sum by the number of yields contained in the database. The APH database must contain at least four actual yields, but may contain up to 10 consecutive crop years of actual or assigned yields.

In lieu of the definition in 7 CFR Part 400, Subpart G § 400.52, the T-Yield is a yield determined as the simple average of the actual yields the producer certified on the APH production report and used for the purposes of yield substitutions.

In lieu of the definition in the BP, the producer's production guarantee (per acre) will be the number of cartons determined by multiplying the insured's approved yield per acre by the coverage level percentage the insured elects, by the insured's over-planting factor.

Marketable beans are fresh market beans that are sold or that grade U.S. No. 2 or better in accordance with the requirements of the United States Standard of Grades for Snap Beans and will withstand normal handling and shipping.

(1) Separate yields are required to establish or update an approved yield for the following:

(a) Insurable fresh market bean types and practices indicated on the actuarial documents for the current crop year; and

**J. Determining APH Production (continued)**

(b) Units.

(2) All insureds are required to file timely production reports separately for each insurable type or practice that was grown by unit.

(3) If a new insurable type is grown which an approved APH yield has not been calculated, see Para. 1787, then the applicable T-Yield(s) for an added type will apply.

**K. Unharvested Production**

In accordance with Section 15(d) of the BP, the insured's price election will be reduced by the factor contained in the SP, or any addendum thereto, and the result will be used to compute the amount of any indemnity in the event of a crop loss on unharvested acres.

**L. Agent Responsibilities**

The CP contain an acreage limitation that limits liability if the policyholder plants more than 110 percent of the highest acreage planted in any one of the most recent three crop years. Agents are responsible for:

(1) Explaining the acreage limitation contained in the CP to the insured;

(2) Calculating the over-planting factor and production guarantee according to the CP; and

(3) Notifying the applicant/insured of any reduction in the production guarantee no later than 30 calendar days after the acreage reporting date. The AIP's calculations of the over-planting factor must be in writing and dated. The AIP must place the calculation of the over-planting in the insured's official file. The AIP must enter the appropriate over-planting factor on the acreage report in the remarks section (to three decimal places). If the over-planting factor is 1.000 or above, 1.000 will be used in the calculation of the approved production guarantee and will be the over-planting factor reported on the acreage report.

## A. Determining APH Production

(1) For bypassed/unharvested acreage, follow the instructions provided under processing beans see Para. 1916.

(2) For harvested delivered production, the production for APH purposes is determined by:

(dollar amount received from the processor) ÷ (the contract price per pound for the tenderometer or sieve size designated by the applicable actuarial documents).

(3) Include all dry pea production harvested from green pea acreage, provided the insured retains ownership of the dry peas see Exh. 19.

(a) Multiply dry pea production by 1.667 for shell types, 3.000 for pod types, and add to the total green pea production.

(b) Divide the total production (both dry pea and green pea) by the acreage originally planted to green peas.

## B. Acceptable Supporting Documentation

To be acceptable supporting documentation, the contract and/or settlement sheet must show:

(1) planted acres;

(2) contract price for the tenderometer reading, sieve size, or grade factor shown on the SP for that type of pea;

(3) dollars received for peas delivered (exclusive of bonuses for acres, high production, split payment, late planting payment, etc., or deductions for seed, pesticides and their application, planting or harvesting);

(4) variety (specific name from the seed company); and

(5) acres harvested.

## 1911 Mint

### A. Determining APH Production

Acreage for which a WCO payment has been made is no longer insurable under the CP for the current crop year. For APH purposes:

(1) any mint production subsequently harvested from uninsured acreage for the crop year and not kept separate from production from insured acreage will be considered production to count; and

(2) acreage for which a WCO payment has been made will receive an amount of production of zero when computing subsequent year's approved APH yield.

### B. Acceptable Supporting Documentation

Acceptable supporting documentation consists of still records, ledgers, assembly sheets, or farm management records that show mint oil production in pounds, and storage records that show pounds or number of barrels with corresponding weight per barrel.

## 1912 Mustard

### A. Determining APH Production

Count harvested production for seed as production for APH yield purposes.

### B. Acceptable Supporting Documentation

To be acceptable supporting documentation, settlement, ledger, and assembly sheets must show production in pounds. If the settlement sheets are in bushels or hundredweight, convert the production to pounds. Refer to FCIC-25010 LAM Exh. 22.

## 1913 Onions

### A. Determining APH Production

Adjust field-run production to reflect the applicable grade standards specified in the policy to use as production for APH purposes.

### B. Acceptable Supporting Documentation

(1) For sold or delivered production at time of harvest, settlement sheets must indicate gross weight (onion production minus dirt and foreign material) and net sorted weight or graded weight with percent of pack based on applicable grade standards.

### B. Acceptable Supporting Documentation (Continued)

(2) Farm stored production should be graded or adjusted for APH purposes (using applicable grade factor) according to applicable grade standards prior to being placed in the storage structure. Gross weight (onion production minus dirt and foreign material) or structure measurements indicating deductions for obstructions are acceptable.

(3) Measurements must be verifiable and definitive for sold, delivered, and farm stored records. For example:

(a) Unacceptable: 16 bins or 34 loads; and

(b) Acceptable: bin = 1,500 lbs., 16 bins at 1,500 lbs. = 24,000 lbs., and 34 loads at 24,000 lbs. = 816,000 lbs.

(4) If records certified by the PRD do not include the required grade information, use applicable grade factors (.85 or as specified on the SP) to convert any remaining field-run production to policy grade standards. This is applicable only for any of the production that does not contain grade information by the PRD (production remaining in storage that has not been graded and/or sold), and any such yields certified act as temporary yields. Update the temporary yields the following crop year using grade information certified. If the yield was not properly certified, or is not replaced the following crop year using required grade information, assigned yield provisions apply.

## 1914 Peanuts

### A. Determining APH Production

Effective for the 2003 crop year, peanuts were converted to a Category B APH crop (insurance plan code 90). Except as otherwise provided in this paragraph, standard APH procedures, including added land, for Category B crops will apply to APH yield determinations for peanuts.

(1) APH databases still containing classification “F” yields after filing the most recent year’s production report will continue to retain such yields until a minimum of 4 actual/assigned yields have been accumulated in that APH database. Adding an actual or assigned yield will result in removal of a classification yield from the affected APH database until all classification yields in the APH database are replaced by actual or assigned yields. When the addition of an actual or assigned yield leaves no further classification yields in an APH database (for example, there are at least four actual or assigned yields), standard APH procedures will apply fully to that APH database.

**A. Determining APH Production (continued)**

(a) For submission of prior production records, in lieu of Para. 1303E, carryover insureds with classification yields in any APH database may not recertify acreage and production for such APH databases for crop years prior to the 2002 crop year.

(b) For entity changes for insureds with classification "F" yields, if an insured with classification yields in the APH database(s) changes to a different entity (for example, an individual insured incorporates the operation, two or more insureds with different classification yields in their respective APH databases merge their operations into one entity), standard APH procedures will be used to establish APH databases for the new entity.

(2) APH procedures regarding yield adjustments/substitutions cups and yield floors will apply to peanuts with the following clarifications:

(a) insureds with APH databases containing classification yields or that contained classification yields the prior year are considered to have at least five years of actual yields and qualify for the 80 percent yield floor; and

(b) yield substitutions will not be applied to any actual yields for crop years prior to the 2002 crop year or to any classification yields in the APH database.

**B. Acceptable Production Evidence**

Using another person's records to establish APH databases will follow standard procedures contained in Para. 1508.

**1915 Popcorn**

**A. Determining APH Production**

For quality adjustment, the processor records must indicate that the processor has rejected the production because it was not of merchantable popcorn quality.

**B. Acceptable Supporting Documentation**

A copy of the contract must show planted acres and the contract price. Processor records must be settlement sheets showing pounds of shelled popcorn.

(1) Convert any ear popcorn production to shelled popcorn.
(2) Count production from yellow or white dent corn as popcorn on a weight basis.

## A. Determining APH Production

(1) For the “Central” and "Southern" Potato states and counties (Alabama; Arizona; all California counties except Humboldt, Modoc, and Siskiyou; Delaware; Florida; Georgia; Maryland; Missouri; New Jersey; New Mexico; North Carolina; Oklahoma; Texas; and Virginia) marketable mature potatoes (except for production with external defects) will be considered production for APH, See Exh. 19. If a claim is filed for indemnity:

(a) claims for indemnities are used for APH; and

(b) in the settlement of a claim, for potatoes harvested prior to full maturity, see Para. B(2) below.

(2) For the “Northern” Potato states and counties (Alaska; Humboldt, Modoc, and Siskiyou Counties, California; Colorado; Connecticut; Idaho; Indiana; Iowa; Kansas; Maine; Massachusetts; Michigan; Minnesota; Montana; Nebraska; Nevada; San Juan County New Mexico; New York; North Dakota; Ohio; Oregon; Pennsylvania; Rhode Island; South Dakota; Utah; Washington; Wisconsin; and Wyoming):

(a) if the insured files a claim for indemnity, only production to count as determined under the terms of the Northern Potato CP and the Storage Coverage Endorsement, if applicable, is used for APH (for example, freeze and loss of bulking are covered under the Northern Potato CP, and causes resulting in tuber rot are covered under the Northern Potato CP and the Storage Coverage Endorsement); and

(b) quality adjustment for these causes made under the terms of the Northern Potato CP and Storage Coverage Endorsement will be reflected in the APH production. However, any reductions in production to count under the terms of the Northern Potato Crop Insurance Quality Endorsement or Northern Potato Crop Insurance Processing Quality Endorsement are not included in determining APH production see Para. B(2) below for potatoes harvested prior to full maturity.

## B. Acceptable Production Evidence

(1) If no claim is filed, use the following acceptable production evidence:

(a) processed potatoes are settlement sheets that show first net weight (gross weight of potatoes minus dirt and foreign material);

(b) fresh market and table stock potatoes are settlement sheets that show total pack-out weight (including overweight, over-pack, etc., if applicable), including culls; and

(c) seed potato records must show total weight sold or as specified below.

**B. Acceptable Production Evidence (Continued)**

(2) Potatoes harvested prior to full maturity may be increased by two percent per day for each day harvested prior to full maturity. Consider the date the potatoes would have reached full maturity to be 45 days prior to the calendar date for the end of the insurance period, unless otherwise stated in the SP. This adjustment will not be made if potatoes are damaged by an insurable cause of loss, and leaving them in the field would reduce production or decrease quality. Retain delivery records for early harvested potatoes by the insured.

(3) For farm stored production, stored production records must show the gross weight of stored potatoes (by unit) prior to being placed in storage. A copy of the weight slips must be provided.

(a) If at the time of placement into storage the potatoes are not weighed or measured, determine the production based upon subsequent volume measurements. Prior to placing the potatoes in the structure, interior measurements of the structure must be made or available, and current crop year deductions accounted for (see Para. 1420).

(b) If acceptable volume measurements are not made, disposition records of the farm stored production from the marketing outlet, processor, packer, etc., are acceptable.

## 1917 Processing Beans

**A. Insurability Requirements**

The insured must provide a copy of all processor contracts to the AIP on or before the ARD.

**B. Determining APH Production**

(1) For bypassed/unharvested acreage, if an indemnity is to be claimed, AIPs must inspect the acreage and determine whether or not timely harvest was prevented directly due to adverse weather and make appraisals that accurately reflect the crop's potential production remaining in the field. If a notice of damage or loss is not filed, and insured acreage will not be harvested, the insured should notify the AIP and request an inspection for APH purposes. Use planted insurable acreage for APH purposes when acreage is bypassed/not harvested.

(2) Production for APH purposes is determined as follows:

**B. Determining APH Production (Continued)**

(a) if bypassed by the processor, records may indicate amounts of bypass payments, acres bypassed, reason for bypass and the basis for the bypass payment(s). Do not convert compensation received from the processor (bypass payment) to production for APH purposes;

(b) appraisals made for potential production (if any) remaining in the field on bypassed/unharvested acreage are used for APH. If the acreage was bypassed due to an insured cause, generally there will be no potential production remaining in the field (same production as would be used on a claim for indemnity). If unharvested (not bypassed due to an insured cause), the potential production should be appraised; however, it should not be identified as due to an uninsured cause of loss, see Para. 1419; and

(c) if a claim for indemnity was completed and no potential production was determined (zero appraisal), then no production from the bypassed/unharvested acreage will be used for APH purposes (such as the acreage was bypassed due to an insured cause of loss and an uninsured cause of loss appraisal was not made).

## 1918 Processing Sweet Corn

**A. Determining APH Production**

For bypassed/unharvested acreage, follow the instructions provided under processing beans, see Para. 1916.

**B. Acceptable Supporting Documentation**

A copy of the contract must show planted acres and the contract price. Processor records must be settlement sheets showing tons delivered for payment (gross tons if there was no quality adjustment), grades (where specified on the actuarial documents), and harvested acres.

## 1919 Rice

**A. Insurability Requirements**

Rice is only insured under a flood-irrigated practice.

**B. Determining APH Production**

Count harvested production from re-growth as production for APH yield purposes.

## A. Additional Insurability Requirements

(1) For fall-planted wheat or barley in counties for which there is only a spring FPD, a replanting payment is not applicable. Insurance attaches to fall planted acreage that had an adequate stand to produce a normal crop on the earlier of the spring FPD or the date the AIP agreed to accept coverage for the crop. However, if the AIP fails to inspect the acreage by the spring FPD, insurance will attach. Insureds must report all planted acreage on which insurance attached for APH purposes. See also the SP for coverage exceptions.

(2) Production from hay-type barley is not insurable and is not acceptable for APH purposes.

(3) Barley or oat small grain mixtures planted for harvest as grain are insurable as the crop which is predominant on a weight basis in the mixture, if the predominant crop is insured. Indicate the applicable crop designation (barley or oats) on the acreage report.

(4) LP period is applicable to small grains, except to any barley or wheat acreage covered under the terms of the barley or wheat WCE.

(5) Insure buckwheat only if it is produced under a contract with a business enterprise equipped with facilities appropriate to handle and store buckwheat production. The contract must be executed by the insured and the business enterprise, in effect for the crop year, and a copy provided to the AIP no later than the ARD. For consideration as a contract, the executed document must contain:

(a) a requirement that the insured plant, grow, and deliver buckwheat to the business enterprise;

(b) the amount of production that will be accepted, or a statement that all production from a specified number of acres will be accepted;

(c) the price to be paid for the contracted production, or a method to determine such price; and

(d) other such terms that establish the obligations of each party to the contract.

**Note:** If the settlement sheets are in pounds or hundredweight, convert the production to bushels, refer to FCIC-25010 LAM Exh. 22.

**B. Determining APH Production**

(1) The barley or wheat WCE is available in counties that have both a fall and spring planting date and the actuarial documents provides a premium rate for this coverage. If the barley or wheat WCE is not selected and winter barley or wheat is damaged after the FPD to the extent that producers in the area would not normally further care for it, the acreage must be seeded to an appropriate type of the crop in order for insurance to continue. The production from such acreage will count for the winter type of the crop.

(a) If the WCE is elected, an appraisal reflecting the crop's potential production is required to determine production for APH purposes prior to destroying winter barley or wheat, or putting it to another use. Use the acres and the appraised potential production to calculate the winter type APH yield. See Exh. 9 for a flow chart outlining acres and production used for APH when the WCE has been selected.

(b) Under the WCE, once an appraisal is made and the winter barley or wheat acreage is released, the insured may destroy the winter barley or wheat and plant the acreage to:

(i) another crop; or
(ii) spring barley or wheat and:

(A) insure the spring barley or wheat as a separate OU. In this case, use the lower of the appraised potential production or winter type approved yield for the winter barley or wheat APH. Use the acres and production from the spring barley or wheat for the spring barley or wheat APH unless the production is commingled with winter barley or wheat production (if the production is commingled, see (C) below);

(B) not insure the spring barley or wheat. In this case, use the lower of the appraised potential production or winter type approved yield for the winter barley or wheat APH. The spring barley or wheat is uninsured and do not use the acres and production for the APH unless the production is commingled with production from an insured unit (either winter barley/wheat or spring barley/wheat); or

**B. Determining APH Production (continued)**

(C) if the spring barley or wheat production from insured spring barley or wheat unit is commingled with winter barley or wheat production, the spring barley or wheat acreage will be considered to be a part of the original winter barley or wheat unit. The acreage originally planted to winter barley or wheat and the acreage planted to spring barley or wheat and the lower of the appraised potential production or the winter barley or wheat approved APH yield for the released acreage and the spring/winter barley or wheat production will be used for the winter barley or wheat APH.

(c) The LP period does not apply under the WCE.

(2) Acreage initially insured that qualifies for the short rate (applies to Additional Coverage and CAT policies) and was removed from insurance coverage (acreage report revised to indicate the short rate) is not used for APH purposes unless the acreage is harvested and the harvested production is commingled with production from insured acreage. However, it will count as a year of producing the crop for determining New Producer status and variable T-Yield percentages.

(3) Special production reporting/APH requirements:

(a) in counties where Durum wheat is shown as a separate type:

(i) Durum wheat must be reported separately from spring wheat types; and

(ii) if Durum and other types are planted (such as both Durum and spring wheat in Durum and spring wheat counties, or both Durum and winter wheat in counties with only Durum and winter wheat), separate line entries by P/T are required on the acreage report.

(b) this procedure is applicable in counties with separate published T-Yields for SF and CC practices. See special production reporting requirements in Part 11 Section 2 for CC and SF practices.

## 1921 Sugar Beets

**A. Insurability Requirements**

Pre-acceptance inspections are required for California sugar beets, except Imperial County, when the application was signed after insurable acreage was planted.

**B. Determining APH Production**

Adjust sugar beet production for APH by taking net paid tons times percent sugar divided by county percent sugar factor found in the SP. Also use the APH certification process for sugar beets (verifiers are not authorized to use additional years' history which may be available from the processor).

When acreage in non-loss units will not be harvested due to the processor's lack of capacity to process the sugar beets, harvested production from acreage within the same unit may be used as the appraisal for APH purposes if:

- more than 50 percent of the sugar beet acreage within a field is harvested, or
- more than 50 percent of a person's unit is harvested when more than one person is operating in the same field.

(1) The insured must notify the AIP if any portion of the insured crop will be abandoned.

(2) The AIP must verify that the applicable acreage requirement (more than 50 percent) is met and, with the insured's consent, the AIP may use the harvested acreage's actual yield per acre calculated in standardized tons, including the sugar content of the harvested acreage, as the appraisal for the unharvested acreage.

(a) The insured must provide the AIP with a legible map or photo identifying the unharvested and abandoned sugar beet acreage, and

(b) The AIP will use the map or photo and the insured's notification of abandonment as documentation of the unharvested acreage.

(3) An appraisal to determine the potential production is required if:

(a) 50 percent or less of the sugar beet acreage for the field is harvested; or

(b) 50 percent or less of the unit is harvested when the field consists of more than one insurable entity.

(4) Coverage ends with the abandonment of the crop on the unit. Therefore, once the acreage has been left unharvested because the production will not be accepted by the processor due to storage or processing capacity, insurance on the abandoned acreage ends.

(5) AIPs must notify the insured of these requirements and ensure harvested production from one insured is not used to establish a yield for the unharvested acreage of any other insured.

### C. Acceptable Supporting Documentation

To consider sugar company delivery records or settlement sheets as acceptable records, they must show net paid tons of beets delivered and percent of sugar.

## 1922 Sugarcane

### A. Insurability Requirements

Sugarcane acreage that exceeds the applicable age limitations shown in the SP is insurable only if the AIP performs an inspection, makes an appraisal that indicates the acreage is capable of producing at least the yield used to determine the production guarantee for the unit for the current crop year, and then agrees to insure it in writing.

### B. Determining APH Production

(1) The insured must notify the AIP at least 15 days before cutting any sugarcane for seed. The notice must include the unit number and the number of acres the insured intends to cut for seed.

(a) If proper notice is given, use the applicable approved APH yield for the current crop year as appraised potential production for the acreage cut for seed unless a field appraisal was made. Insureds may request a field appraisal if they feel the approved APH yield does not accurately reflect the acreage's potential production. If a field appraisal is made, use the appraised potential production (either for APH or claim purposes) for acreage cut for seed.

(b) If the proper 15-day notice is not given, consider insurable acreage cut for seed as put to another use without consent. Apply the applicable production guarantee per acre for the current crop year as an uninsured cause of loss and use for claims purposes only. Use the insurable acreage cut for seed for APH purposes; however, the uninsured cause of loss appraisal is not.

**B. Determining APH Production (continued)**

(2) Sugarcane records are generally not available by the cancellation date for the most recent crop year. Therefore, there is a one-year lag in the APH database; for example, for the 2019 crop year, the base period will begin with the 2017 crop year and may contain up to ten APH consecutive crop years (begin with 2017 and work backwards). Because of the lag year, adjustments are necessary to advance the percentage of the variable T-Yields when sugarcane was produced in 2017 to assure equitable APH yields compared to other Category B APH crops.

(a) Added land/new crop/P/T provisions apply to units on which the insured have not actively engaged in farming for a share of the crop's production prior to the 2018 crop year. See Part 17 Section 9.

(b) New Producer procedures apply if a person was not actively engaged in farming for a share of the sugarcane production for more than two crop years prior to the 2018 calendar year. See Part 17 Section 5.

(c) For units (by practice) on which sugarcane was produced for the 2018 crop year, 2018 is recognized as a crop year with actual yields available, even though they cannot be reported until the 2019 crop year. For new insureds that elected to provide production reports and for carryover insureds who do not qualify as a "New Producer" or the acreage does not qualify as added land, determine the applicable percentage of the T-Yield as follows:

(i) if no production history prior to the 2018 crop year can be provided and assigned yield provisions do not apply, the APH Yield is 80 percent of the applicable T-Yield. The APH database is completed using four 80 percent T-Yields;

(ii) if one actual/assigned yield (example: 2017) is applicable, the APH database is completed using one actual/assigned yield and three 90 percent T-Yields;

(iii) if two actual/assigned yields (example: 2017 and 2016) are applicable, the APH yield is calculated using two actual/assigned yields and two 100 percent T-Yields. Two actual/assigned and two 100 percent T-Yields are entered in the APH database;

(iv) if three actual/assigned yields (example: 2017, 2016 and 2015) are applicable, the APH yield is calculated using three actual/assigned yields and one 100 percent T-Yield. The three actual/assigned yields and one 100 percent T-Yield are entered in the APH database;

(v) for carryover insureds, yield limitations apply on a unit basis (by practice) when using the special lag year procedures; and

**B. Determining APH Production (continued)**

(vi) use the yield descriptors as indicated to identify each yield entered in the APH databases.

**C. Acceptable Supporting Documentation**

Boiling house (mill) records must show net tons, net tons per acre, or net pounds of raw sugar. Unit of measure is whole pounds of raw sugar.

(1) Multiply raw sugar production indicated in net tons by 2,000 to determine pounds of raw sugar. Enter pounds of raw sugar as total production in the production report.

(2) Determine appraised potential production used for APH purposes in net pounds of raw sugar.

(a) To determine potential production in pounds of raw sugar use the following formula:

Appraised tons per acre X 2,000 X percent-of-sugar factor = potential production in pounds of raw sugar.

(b) The percent-of-sugar (sucrose) must be determined from:

(i) field samples from the same field made by the mill;

(ii) acreage harvested from the same field; or

(iii) the percent-of-sugar as indicated by a factor on the actuarial documents, if the percent-of-sugar from (1) or (2) is not available.

(c) Enter the percent-of-sugar used to adjust the production for the most recent crop year in the base period, in the total of the production report.

## 1923 Tobacco

**A. Insurability Requirements**

Effective for the 2006 crop year, all tobacco types were converted to a Category B APH crop (insurance plan code 90). Except as otherwise provided in this paragraph, apply standard APH procedures (including added land) for Category B crops to APH yield determinations for the tobacco types shown below.

## A. Insurability Requirements (Continued)

| CROP CODE | CROP NAME | CROP TYPE | STATE |
|---|---|---|---|
| 0229**** | Flue Cured Tobacco | 111 | NC, VA |
| | | 012, 112 | NC |
| | | 013 | NC, SC |
| | | 014 | AL, GA, FL |
| 0230**** | Fire Cured Tobacco | 021 | VA |
| | | 022, 023 | KY, TN |
| 0231 | Burley | 031 | IN, KY, MA, NC, OH, TN, VA, WV |
| 0232 | Maryland Tobacco | 032 | MD, PA |
| 0233**** | Dark Air Tobacco | 035 | KY, TN |
| | | 036 | KY |
| | | 037 | VA |
| 0234 | Cigar Filler Tobacco | 041 | PA |
| 0235**** | Cigar Binder Tobacco | 054, 055 | WI |
| 0235 | Cigar Binder Tobacco | 051 | CT, MA |
| | | 052 | MA |
| 0236 | Cigar Wrapper Tobacco | 061 | CT, MA |

## B. Determining APH Production

(1) Establishing APH Databases (new producer, new insured, added land, and new crop/P/T APH database). All new APH databases initially established for the 2014 and subsequent crop years will be based on standard APH procedures. Such determinations apply regardless of whether the insured (or FSA FN) was previously classified on an FCI-32 or has other APH databases containing classification yields, see C below for acceptable production records. For the purposes of calculating SA T-Yields for added land/new crop P/T APH databases, approved APH yields for APH databases containing F-Yields (such as classification yields) should be included in the SA T-Yield calculation, see Part 17 Section 9, added land/new crop P/T APH databases.

(2) APH procedures regarding yield adjustments (yield substitution), cups and yield floors, and yield reductions (reductions due to excessive yields, inconsistent yields or different production methods) will apply to tobacco with the following clarifications:

(a) do not apply yield substitutions to any classification yields. Substitute yields applied to actual yields are determined using 60 percent of the T-yield; and

(b) insureds with APH databases containing classification yields are considered to have at least five years of actual yields and qualify for the 80 percent yield floor.

**** In lieu of Para. 1303E, carryover insureds with classification yields in a APH database may not recertify acreage and production for that APH database for crop years prior to the 2005 crop year.

**C. Acceptable Supporting Documentation**

(1) Acceptable production records must be provided by unit/P/T/V as shown on the actuarial documents, according to standard APH procedures. Production data may be obtained from grading sheets, settlement sheets, ledger sheets, weight tickets, or other verifiable documentation from a buyer, broker, processor, or storage facility. Such records must show net pounds (minus tare) after grading.

(2) Using another person's records to establish APH databases will follow standard procedures contained in Para. 1508.

(3) Other acceptable production records as specified in Para. 1508 may be used to establish an APH yield.

(4) Use harvested production unsold in the crop year produced for APH purposes; however, the AIP must verify unsold tobacco production for use for APH purposes.

## 1924 Tomatoes, Fresh Market Guaranteed Production

Convert bin count, cartons, crates, bushels or pounds to the equivalent of 25 pound cartons rounded to the nearest whole carton unless otherwise specified in the SP.

(1) The AIP must determine, through the insured, whether all acreage within the field is planted or if there are any areas of the field that are not planted such as unplanted headlands, field roads, and/or other areas not part of the planting pattern used for spraying and care of the crop, because unplanted acreage is not insurable.

(2) Based on the applicable CP, when the insured reports row widths greater than six feet, the AIP must determine the insurable acreage using the following method:

(a) divide six by the reported row width (for example, reported eight foot row width) 6 ÷ 8 = 0.750 factor; and

(b) multiply the reported field acres by the factor to establish the insurable acreage that will be entered on the acreage report (for example, reported 20.0 acres within the field multiplied by the factor .750 = 15.0 insurable acres).

## 1925 Tomatoes Processing

Only one approved APH yield is required for Hand Harvest and Machine Harvest practices see Para. 1923 for acreage determinations.

## 1926-1940 (Reserved)

## 1941 General Information

The following procedure is crop specific production evidence that is required in conjunction with the requirements provided in Part 14. Any production evidence, which does not meet the requirements specified for the crop, may be forwarded to the RO to determine its acceptability.

## 1942 Almonds

Delivery statements, pool closing statements or production recaps must show all harvested (whole, chipped and broken in-shell meats) meat pounds (including meat pounds damaged due to uninsured causes of loss) by variety. Pounds of in shell Almonds must be shown separately, by variety and must be converted to meat pounds. See Exh. 19 for conversion factors by variety.

## 1943 Apples

### A. Acceptable Production Evidence for APH

Acceptable production evidence including printouts or receipts from each first handler of the fruit for that crop year must show total marketable (as defined in the policy) production (in bushels, bin count, or weight delivered) by variety.

A printout or receipt from a packing shed, processor, auction, marketing cooperative, jobber, commission merchant, sales broker, pick records, see Para. 1421 for acceptable pick records, or a warehouse receipt which shows total production and date of transaction is acceptable. Bin count, cartons, crates or weight must be converted to the appropriate unit of measure.

If insured under the Optional Coverage for Quality Adjustment and a claim for indemnity has been completed, total marketable production from the claim prior to adjustment for quality is used for APH purposes (i.e., U.S. No.1 Processing or better).

**B. Fresh and/or Processing Types**

APH databases are established for apples by fresh and/or processing types as specified in the SPs. Although the APH database will reflect the applicable block(s), the insurable type of fresh or processing may change dependent upon how the apples are insured in the current crop year. In order to establish OUs for the Fresh type, the insured must certify and provide verifiable records to support that at least 50 percent of the production from insurable acreage reported as Fresh apple acreage from each unit, was sold as Fresh apples in one or more of the four most recent crop years, refer to exception in B(2) when producers do not have fresh records by unit. To qualify for fresh apple acreage, apples used for fresh apple slices may be considered fresh if the price received is commensurate with a fresh apple price. Insureds must be able to provide verifiable records when requested by the AIP. These records must indicate the crop, name of the insured, name of the buyer, the minimum production sold as fresh, date the production was sold, the amount of production sold in the applicable unit of measure, and the price. Verifiable records may include: packer or buyer records, or daily sales records, and records from a State Marketing Program. These verifiable records must be provided by a third party (e.g. an Apple marketing order from a sales agent, sales cooperative or storage operator is allowable unless such certification is from a vertically integrated operation certifying their own operation; additionally, a grower certification or grower report is not allowable since it is not from a third party).

If an AIP is reviewing these verifiable records and they are inconsistent with the applicable APH crop year, then additional records to substantiate production are required.

If only a portion of the total apple acreage is reported as fresh, the total amount of production sold must reflect at least 50 percent of the production being sold as fresh. Such records may be used as verifiable records attributable to that portion of the acreage as fresh.

(1) An insured may obtain verifiable sales records from the previous producer of the acreage, regardless of whether the previous producer has a share in the current crop year's acreage. The prior producer's verifiable sales records may be used by a carryover insured for any added acreage or by a new insured for insured acreage to meet the fresh apple requirements.

**Example:** Insured H is a carryover insured who has certified 5 years of acreage and production for 10 acres of apples. Insured H has added an additional 10 acres of neighboring farm land from Producer I to his operation with existing mature apple trees to this same unit for the current crop year. Because the acres insured for Insured H has changed from 10 acres to 20 acres for the current year, the insured must be able to show that 50 percent of production from 20 acres was sold as fresh apples in 1 or more of the 4 most recent crop years.

**B. Fresh and/or Processing Types (Continued)**

Since the fresh option is based on records of sold production, as long as Insured H provides the AIP with verifiable sales records indicating that 50 percent of the production from the 20 acres was sold as fresh apples in 1 or more of the 4 most recent crop years it is insurable. This may require Insured H to obtain verifiable sales records from Producer I demonstrating that apples from Producer I's 10 acres have been sold as fresh apples in 1 or more of the 4 most recent crop years.

(2) While insureds can and do maintain records of production by unit, once apples are delivered to a warehouse (which is often a third party) for later sales and distribution, it may be impractical to track apples by unit. Therefore, insureds who do not have separate records by unit of fresh apple production in one or more of the last four years but do have records of total fresh apple production, may use these records to qualify for the fresh apple price. AIPs may consider records of total production (rather than by unit) from one of the four most recent crop years that reflect fresh apple sales.

**Example:** In 2019, an insured reports two OUs of processing apple acreage and one OU of Fresh apple acreage for the 2018 crop year. Records of Fresh apple production sold from all apple units can be used as a verifiable record provided the AIP can determine the records of Fresh apple production sold in one of the four most recent years from all units would account for at least 50 percent of the total production from the OU insured as Fresh apple acreage for the 2018 crop year.

**Example:** In 2019, an insured reports Fresh apple acreage on three BUs for the 2018 crop year. The insured is able to provide verifiable records proving at least 50 percent of the total production sold, from all three BUs, were sold as fresh in one or more of the four most recent crop years.

**C. Insuring Both Fresh and Varietal Group Types**

Effective beginning with the 2015 CY, an insured may either insure "Fresh 111" type or another varietal group type as identified within the actuarial documents, but an insured may not insure both within the same BU or OU. "Fresh 111" type and a varietal group type can only be insured under the same policy if the types qualify for separate BU as provided by the BP Section 34.

**Example:** An Apple policy could not contain Fresh Type Unit 0001-0001OU and Varietal Group A Unit 0001-0002OU. If the Fresh Type was crop shared with Producer X and the Varietal Group A was crop shared with Producer Z, both types could be insured on the same policy since they qualify for separate BU: i.e., Fresh Type Unit 0001-0001BU and Varietal Group A Unit 0002-0001BU.

## 1944 Avocados, Florida

Acceptable marketing records include pool statements, pool summary statements, pack statements, or year-end settlement sheets. These statements must show paid pounds of Avocados by type, if applicable. Production must be converted to the appropriate unit of measure. The SP may authorize coverage level and price election by type.

## 1945 Blueberries

Printouts or receipts from a handler must indicate the date, insured's name, and total production in pounds. Printouts or receipts from a packing operation, processor, auction, marketing cooperative, jobber, commission merchant, sales broker, and pick records (see Para. 1421), warehouse, certified scale receipt (with third party verification), inventory stock sheet, receiving report, grower pay report, grower summary reports must indicate the date of the transaction, insured's name, and total production.

Total production must indicate unmarketable and marketable production separately. Marketable production must indicate grade and type of production: fresh, processing, or juice. Production indicated as trays, flats, cartons, containers, or quarts must be converted to pounds. The method of conversion must be explained and included with the records. Fresh Blueberry package determinations approved by U.S. Highbush Blueberry Council:

| PACKAGE SIZE | NUMBER OF PACKAGES PER FLAT | WEIGHT PER FLAT |
|---|---|---|
| 3.5 oz. (100 g.) | 12 | 2.6 lbs. |
| 4.4 oz. (125 g.) | 12 | 3.3 lbs. |
| 6.0 oz. or ½ dry pint (170 g.) | 12 | 4.5 lbs. |
| 1 dry pint (12 oz.) | 6 | 4.5 lbs. |
| 1 dry pint (12 oz.) | 12 | 9.0 lbs. |
| 1 dry quart (24 oz.) | 6 | 9.0 lbs. |
| 2 dry quarts (48 oz.) | 4 | 12.0 lbs. |

| PACKAGE SIZE | NUMBER OF PACKAGES PER FLAT | WEIGHT PER FLAT |
|---|---|---|
| 2 lbs. | 4 | 8.0 lbs. |
| 2.3 lbs. (Bulk Pack) | 4 | 9.2 lbs. |
| 2.5 lbs. | 4 | 10.0 lbs. |
| 2.75 lbs. | 4 | 11.0 lbs. |
| 2.75 lbs. | 8 | 22.0 lbs. |
| 5 lbs. | 1 carton | 5.0 lbs. |
| 10 lbs. | 1 carton | 10.0 lbs. |

## A. Arizona and California Citrus Acceptable Marketing Records

Acceptable marketing records are pool statements, pool summary statements, pack statements or year-end settlement sheets that indicate by crop/type, the number of standard size cartons packed or the net weight of the packed fruit.

(1) Except for fresh citrus fruit "over packed" for export markets, cartons are used when fresh citrus fruit is packed into standard size containers (as indicated in the CP) and the marketing records indicate the number of cartons (no adjustments required).

**Example:** Packing records show that 8,120 boxes of the standard container size for the crop/type were packed. 8,120 boxes packed = 8,120 cartons of production for APH and loss adjustment purposes. Disregard the pounds per box (e.g., 40 lbs.) that the processor packed if different than the average net pounds of packed fruit in a standard packed carton for the crop/type (i.e., 38 lbs.).

(2) Citrus production without marketing records on a carton basis must be converted to cartons on the basis of average net pounds of packed fruit for the standard packed carton.

**Example:** Packing records show 90,820 total pounds were packed. The number of boxes of the standard container size packed is not available from the packer. The number of cartons is determined by dividing the total pounds by the average net pounds for the standard container size for the crop/type as indicated in the CP (i.e., 38 lbs.).

90,820 lbs. ÷ 38 lbs. = 2,390 cartons

In order to convert bins to cartons when marketing records are not provided for Navels/Valencia Oranges production on a carton basis, the average net pounds of packed fruit for the standard packed carton is based on the number of field bins multiplied by 925 pounds per field bin, and the results divided by 38 pounds per carton.

**Example:** 16 field bins of Navel/Valencia Oranges x 925 lbs. = 14,800/38 lbs. = 389 cartons

In order to convert bins to cartons when marketing records are not provided for Mandarin production on a carton basis, the average net pounds of packed fruit for the standard packed carton is based on the number of field bins multiplied by 825 pounds per field bin, and the results divided by 25 pounds per carton.

**Example:** 16 field bins of Mandarins x 825 lbs. = 13,200/25 lbs. = 528 cartons

(3) Fresh citrus fruit packed in different size containers than indicated in the CP (1/2 ctns, holiday packs, 20 lb. bags, etc.) must be converted to standard cartons on the basis of average net pounds of packed fruit for the standard packed carton.

**A. Arizona and California Citrus Acceptable Marketing Records (continued)**

(4) Fresh citrus fruit "over packed" for export markets. Some foreign buyers require packers to pack additional fruit into standard size containers (e.g., as much as 50 lbs. of Navel Oranges may be packed in a #58, 38 lb. container) prior to shipment overseas. In these situations, the containers are "over packed" and the fruit is slightly compressed.

"Over packed" production must be converted to equivalent standard packed cartons. If the marketing record clearly indicates that the fruit was packed for an export market and the cartons are "over packed," the total packed weight must be divided by the average net pounds of fruit specified for the standard packed carton for the crop/type.

**B. Arizona and California Lemons**

The weight of packed fruit (marketable or marketed as fresh fruit) can be determined from sample-grade report or a pack-out report, whichever is available immediately after harvest (or delivery to a processor). To determine the amount of production in a standard shipping container, multiply the number of containers given on the report by the weight of the containers and divide by 40 pounds to determine the number of Standard Packed Cartons.

Pack-out statements or settlement sheets must show pooled tons of citrus by types. Cartons, bins, mesh sacks, net weight receipts, or other units of measurements must be converted to ton equivalents by citrus type.

In order to convert bins to cartons when marketing records are not provided on a carton basis, the average net pounds of packed fruit for the standard packed carton is based on the number of field bins multiplied by 936 pounds per field bin, and the result divided by 40 pounds per carton.

**Example:** 16 Field bins of Lemons x 936 lbs. = 14,976/40lbs = 374 cartons

**C. Texas Citrus Fruit**

Records are generally not available by the cancellation date for the most recent crop year. Therefore, there is a one-year lag in the database; for example, for the 2019 crop year, the base period will begin with the 2017 crop year and may contain up to 10 APH consecutive crop years (begin with 2017 and work backwards).

## 1947 Cranberries

Truckload weight receipts, berry slips, settlement weight sheets, sales receipts, final or year-end statements from a handler, processor or packing house must indicate net paid barrels of cranberries delivered or stored for each unit.

## 1948 Figs

Packer or California Advisory Board Summary Sheet must show net paid pounds of marketable figs (including manufacturing grades). Marketed fresh-fruit production is converted to a dried-fruit basis by dividing the total pounds of fresh fruit by 3.0.

For new insureds and policies, which are being transferred, production evidence of acreage and production must be provided to the verifier.

## 1949 Grapes

Settlement sheets, sales receipts, machine harvest records, certified scale records, pick records and final or year-end statements from a winery, cannery or processor must indicate net paid tons of Grapes delivered by variety. Converting gallons of wine to tons of grapes does not qualify as acceptable records.

(1) Remittance or final statement sheets from Raisin packers or the Raisin Administrative Committee must show the net paid tons of clean, dry Raisins; or, the number of insured tons of raisins established on a claim for indemnity. Each pound of Raisins converts to 4.5 pounds of green Grapes.

(2) Production for Grapes harvested before normal maturity or for special uses (i.e., sparkling, botrytis affected, ice-wine, etc.) are used for APH purposes when adequate records are available. The production of such Grapes will be adjusted by the factor calculated by dividing the price per ton for such Grapes by the price per ton for fully mature Grapes of the same type and normal use.

Reduced grape production under tonnage policies also requires reduction in the RO determined yields. The insured shall timely report cultural practices that will reduce the insured crop's production from previous levels on the PAW. Reductions in the approved APH yield will be made based upon the terms of the tonnage policy provided.

(3) Grapes insured in AZ/CA with type 095 in the actuarial documents that receive a WA for price are not considered separate policies for the different types under the 095 type in administering the terms of the CP (e.g. even though a WA may provide different prices for 3 types of grapes insured under type 095, there is only one administrative fee and all types are still considered insured under 095).

## 1950 Table Grapes

Packing house records must be settlement sheets, receiving statements, final sales statements from broker or Table Grape Commission records. Records must show the number of packed lugs by variety. If the fruit is packed in other than standard weight lugs (as stated in the CP), the net weight of the lugs must be noted.

Production of Table Grapes damaged by insured causes that could be marketed for any use other than Table Grapes is determined by multiplying the number of tons that could be marketed by the total value per ton of the damaged Table Grapes or $50.00 per ton, whichever is greater, and dividing that result by the highest price election available on the actuarial documents for the type.

## 1951 Macadamia Nuts

Delivery records, production recaps or sales receipts from processors must indicate weight of sound wet-in-shell nuts by variety, which excludes immature, unsound nuts (floaters and peewees), and foreign material.

Sound wet-in-shell is defined as the weight of the macadamia nuts as they are removed from the orchard with the nutmeats in the shells after removal of the husk and before being dried.

(1) Pick records which indicate total acres and production by crop, crop year and unit (see Para. 1421 for acceptable pick records) are acceptable if supported by records indicated above and show the information required.

(2) Records are generally not available by the cancellation date for the most recent crop year. Therefore, there is a one-year lag in the database; for example, for the 2019 crop year, the base period will begin with the 2017 crop year and may contain up to 10 APH consecutive crop years (begin with 2017 and work backwards).

## 1952 Peaches

### A. Production Evidence for APH

Production evidence may include a printout or receipt from each first handler of the fruit for that crop year. A printout or receipt from a packing shed, processor, auction, marketing cooperative, jobber, commission merchant, sales broker, pick records (see Para. 1421) or a warehouse receipt which shows total production and date of transaction is acceptable. Bin count, cartons, crates or weight must be converted to the appropriate unit of measure.

### B. OUs by Fresh and/or Processing Types

OUs are available for Peaches by Fresh Peach Production and/or Processing Peach Production as specified in the SPs. In order to establish OUs for Fresh peach production, the insured must certify and, if requested by the AIP, provide verifiable records to support that at least 50 percent of the production from acreage reported as Fresh peach acreage, was sold as Fresh peaches in one or more of the four most recent crop years.

These records must indicate the crop, name of the insured, name of the buyer, the minimum production sold as fresh, date the production was sold, the amount of production sold in the applicable unit of measure, and the price. Verifiable records may include: packer or buyer records, daily sales records, and records from a State Marketing Program.

**Exception:** If there are no processing peach outlets in the area [i.e., other similarly situated producers in the area (e.g., same crop/practice)] and there is no question that peaches are direct marketed or sold to retailers as fresh peaches, there should be no prerequisite requirement to request such records.

## 1953 Pears

Certified records including printouts or receipts from each first handler of the fruit for that crop year must show total production in tons by type. A printout or receipt from a packing shed, processor, auction, marketing cooperative, jobber, commission merchant, sales broker, pick records, see Para. 1421 or a warehouse receipt which shows total production and date of transaction is acceptable. Bin count, cartons, crates or weight must be converted to the appropriate unit of measure.

### A. California Only

Production for APH purposes must be reported for the applicable grade: first grade canning, U.S. #1 (Summer, Fall, or Processing Pears), Extra #1 or U.S #1 (Winter Pears). If records certified by the production reporting date do not include production by grade, use the following grade factors to convert field run production to production to count for APH purposes: Type I = 85percent, and Type II = 80percent.

If the grade is certified after the production reporting date, it will be included in the next year's update.

(1) Actual grade and price record. If an insured provides actual grade and price records by the production reporting date that result in a higher APH yield than using the above factors, the higher yield must be used.

(2) A production level of at least 6.25 tons per acre of field run production in at least one of the four previous crop years is sufficient to satisfy the requirement of 5.0 tons per acre at the applicable grade.

### B. All States except California

Regardless of whether acreage is insured under the Fresh Pear Quality Adjustment Endorsement or not, field-run marketable production is applicable. However, beginning with the 2015 CY all pear trees in the unit insured under the Fresh Pear Quality Adjustment Endorsement are required to be managed for the production of fresh market pears.

If a claim for indemnity has been completed, total marketable production from the claim prior to adjustment for the pear quality endorsement is used for APH purposes.

## 1954 Prunes

The unit of measure is tons (to the nearest tenth) of natural condition (dried) Prunes. Advance payment summary sheets must show, by variety, net paid weight, which grades standard or better. Marketed fresh-fruit production is converted to a dried-fruit basis by dividing the total tons of fresh fruit by 3.0.

**A. Processing Cling Peaches**

Must meet minimum standards as specified in the SP and include all production accepted (marketed by processor). Damaged production from alternative uses (i.e., juice) can be converted to a processing ton equivalent using the procedures outlined in D below. Fresh records may be used for the processing type elected.

**B. Processing Apricots and Freestone Peaches**

Must meet minimum standards as specified in the SP and include all production accepted (marketed by processor). Damaged production from alternative uses (i.e., puree or juice) can be converted to a processing ton equivalent using the procedures outlined in D below.

Fresh records may be used for the processing crop elected.

**C. Fresh Freestone Peaches, Fresh Apricots, Fresh Nectarines, and Fresh Plums**

Certified records may include a printout or receipt from each first handler of the fruit for the crop year. A printout or receipt from a packing shed, processor, auction, marketing cooperative, jobber, commission merchant, sales broker, pick records see Para. 1421 or a warehouse receipts are acceptable.

Bin count, cartons, crates, lugs or irregular sizes or weight must be converted to the appropriate unit of measure. Must meet minimum standards as specified in the SP and include all production accepted (marketed by packer).

Damaged production from alternative uses other than fresh can be converted to a fresh lug equivalent using the procedures outlined in D below. Processing production where the primary intent was processing may not be converted to fresh production. If the insured intends to harvest the fresh crop policy as processing, the AIP must be notified so that a fresh equivalent may be determined. AIPs should advise insureds appropriately regarding the terms and production reporting requirements of the policy to deter a producer from receiving assigned yields for unacceptable production reports.

**D. Damaged Production**

Damaged production from alternative uses is used for APH purposes when adequate records are available.

Production of fresh or processing Stonefruit damaged by insured causes that could be marketed for any use other than fresh or processing Stonefruit is determined by dividing the value per lug or ton of marketable production minus the harvest cost value from the SP by the highest price election multiply the result by the quantity of such production.

**Note:** If this value is less than 75 percent of the marketable value of undamaged production.

**D. Damaged Production (Continued)**

**Note:** Production and value must be converted into the proper unit measurement for calculation.

## 1956 Walnuts

Delivery records, production recaps or sales receipts from processors must indicate the net weight of in shell Walnuts by variety.

## 1957-2000 (Reserved)

# PART 20 CATEGORY D CROPS
## Section 1 Insurability

### 2001 General Information

Dollar Plans of insurance provide for certain crops, protection against declining value due to damage that causes a yield shortfall. The amount of insurance is based on the cost of growing a crop in a specific area. A loss occurs when an annual crop value is less than the amount of insurance due to a production loss.

This plan offers the insured the opportunity to select one of several dollar amounts of insurance. Maps, included in the actuarial documents, may be used to determine the coverage options and premium rates.

Category D crops include: Florida Citrus, Forage Seeding, Hybrid Seed Corn, Hybrid Sorghum Seed, Macadamia Trees, Peppers, Raisins, Sweet Corn (Fresh Market), and Tomatoes (Fresh Market - Dollar Plan).

### 2002 Production Reports

The Dollar Plan of Insurance guarantee is established by using the insureds election percentage of the maximum dollar amount provided in the actuarial document. There are no underwriting requirements for production reports to qualify for OUs.

Although production records are not required to establish the insurance guarantee, they may be necessary for loss purposes. Refer to the applicable loss adjustment directives.

### 2003 OU for Raisins

Raisins may be divided into more than one OU if, for each proposed OU:

(1) the insured maintains written, verifiable records (tray counts are acceptable) of raisin production for at least the previous crop year; and

(2) the acreage of insured raisins is located on non-contiguous land.

### 2004-2006 (Reserved)

## 2007 PAW

The PAW is an insured's self-certification of the planting and other conditions of the perennial crop used by the AIP to determine insurability and other requirements in accordance with the policy.

Florida Citrus Fruit is the only Dollar Plan crop which requires a PAW.

### A. PAW Requirements

A PAW is required for each unit. The insured must complete and submit a PAW every year by the ARD. If not, the AIP must:

(1) Obtain the required information from the insured;
(2) Conduct a PAIR to determine the required information; or
(3) Deny coverage for the applicable crop year.

The AIP representative may assist the insured with completion of the PAW.

### B. PAW Completion Instructions

| ELEMENT | REQUIRED INFORMATION |
|---|---|
| **Block Number** | Enter the block number. To the third place (i.e., 001).<br><br>If separate information is available by individual block, separate line entries may be made on the PAW.<br><br>Reporting by block number is required for each homogenous planting pattern of the citrus fruit group.<br><br>Prepare a sketch map or provide an aerial map identifying the location of each block. Designate a unique number for each block reported. Enter these numbers along with the block number in the block number column. Complete the items applicable to the crop for each block. |

## B. PAW Completion Instructions (continued)

| ELEMENT | REQUIRED INFORMATION |
|---|---|
| **Unit Number** | Enter the appropriate unit number. BUs and OUs are allowable as provided by the Florida Citrus Fruit CP. |
| **Type** | Identify commodity type, group, subclass, and/or intended use as listed in the actuarial document(s). Separate line entries may be made, if applicable. |
| **Practice** | Enter the practice as provided in the actuarial documents. |
| **Date Set Out/Grafted** | Enter the date the trees were set out/grafted. |
| **Number of Trees Top-worked/Buckhorned** | Enter the number of trees top-worked or buckhorned within the last five policy years, if applicable. |
| **Month/Year Top-worked or Buckhorned** | Enter the month and year of top-working or buckhorning that occurred within the last five policy years, if applicable; otherwise, enter N/A. |
| **Number of Trees** | Enter the number of insurable trees that make up the block. See Section 6b of the CPs. |
| **Tree Spacing** | Average tree spacing (in feet) and/or pattern within this block (example 25 X 20).<br><br>Example: If trees are being interplanted as a part of a tree replacement program and the in-row spacing changes to 12.5, update the tree spacing to 12.5 ft. X 20 ft. |
| **Planting Pattern** | Designate the applicable planting pattern by entering one of the following:<br><br>"S" for Square Planting Pattern;<br>"B" for Hedgerow or Border Planting Pattern;<br>"Q" for Quincunx Planting Pattern;<br>"H" for Hexagonal Planting Pattern;<br>"D" for Double Row Planting Pattern; or<br>"O" for Other Planting Pattern |
| **Number of Trees per Acre** | Calculate the number of trees per acre as follows:<br><br>Number of square feet per acre ÷ number of square feet per tree (based on the current planting pattern).<br><br>*There are 43,560 square feet per acre.<br><br>Example: Based on a tree spacing of 20 X 20, the number of square feet per tree = 400 square ft., the number of trees per acre is calculated as 43,560 square ft. per acre ÷ 400 square ft. per tree = 109 trees per acre.<br><br>Or, if trees are being interplanted as a part of a tree replacement program and the spacing changes to 10 X 20 = 200 sq. ft., per tree, the correct number of trees per acres becomes 43,560 sq. ft. per acre ÷ 200 sq. ft. = 218 trees per acre. |

## B. PAW Completion Instructions (continued)

| ELEMENT | REQUIRED INFORMATION |
|---|---|
| **Acres in Block** | Number of insurable acres, rounded to tenths. |
| **Percent Stand** | The insured must calculate the percent stand from the most recent planting pattern and planted acres (not to exceed 100% of field acres).<br><br>Calculate the percent stand by dividing the number of insurable trees by the product of the number of trees per acre multiplied by the acres in the block.<br><br>**Example:** 10 acres were initially planted in an 18 x 20 planting pattern with 121 trees per acre. The insured reports 975 trees; the percent stand would be 80 percent [968 trees / (121 trees/acre x 10 acres)].<br><br>The percent stand column would display 80% stand and in the acres column there would be 10 acres. The Acreage Report would reflect 8.0 insurable acres due to the removal of 2.0 acres of trees. |
| **Insurable Or Uninsurable** | Designate whether the block has met the insurability requirements. Refer to the policy provisions, the actuarial document(s), and this procedure for determining insurable and uninsurable acreage. Uninsurable trees are to be excluded before determination. Acreage must be reported as uninsurable when minimum age requirements are not met.<br><br>Each homogenous planting pattern is reported as a plot. A homogenous planting pattern of a citrus fruit group may consist of different tree age classes (i.e., 5 years, 6 to 8 years, or 9 years and above).<br><br>(a) For age classes within the plot that cannot be separately plotted (subplots), use the age class with the greatest percentage of insurable trees in the plot to determine the amount of insurance.<br><br>(b) If the age classes within the plot can be separately plotted, the insurable acreage and amount of insurance are determined for each age class and reported on that basis. |
| **Totals for Acres in Block, Number of Trees, and Number of Trees per Acre** | This is the last row in the table on the form, used to enter the summation of the total acres in block, total number of trees, and number of trees per acre. |

## B. PAW Completion Instructions (continued)

| The following questions are to be completed by the insured with the assistance of the AIP representative. | |
|---|---|
| **ELEMENT** | **REQUIRED INFORMATION** |
| **Date of Last Inspection** | Provide the date when the last inspection of the unit was performed, if applicable. |
| **Has the dollar amount of insurance for the insured crop been previously adjusted due to a reduction of the crop's production potential?** | If an AIP or RMA has previously adjusted the dollar amount of insurance for the insured crop due to a reduction of the crop's production potential which resulted in a comparable loss in yield in one or more of the last five years, the insured must identify the year and answer "YES", and provide all applicable Acreage Reports reflecting these reductions and/or adjustments.<br><br>**Note:** AIPs may use PHTS for prior year Acreage Reports. |
| **Has an adjustment been applied to the crop's insurable acres resulted in a comparable reduction in yield?** | If an adjustment has been applied to the crop's insurable acres by an AIP and/or RMA resulted in a comparable reduction in yield in one or more of the last five years, the insured must identify the year and answer "YES", and provide all applicable Acreage Reports reflecting these reductions and/or adjustments.<br><br>**Note:** AIPs may use PHTS for prior year Acreage Reports. |
| **Has damage (e.g., disease, hail, freeze) occurred to the trees that will reduce the insured crop's production?** | If any damage (i.e., disease, hail, freeze) has occurred, including canopy damage, that will reduce the crop's production by more than 10 percent relative to when the last PAIR was performed, or when the last liability reduction was made (e.g., loss of canopy which was previously reduced at the time of loss and/or by RO Determination) the insured must answer "YES". If requested by the AIP and/or the RO, hard copy records of acreage and production are required. These records may be necessary to assess the productive capability of the grove. |
| **Have cultural practices or production methods (e.g., heavy pruning, transitioning to organic) been performed that will reduce the insured crop's production?** | If changes in cultural practices or production methods (e.g., heavy pruning, transitioning to organic, etc.) have been performed that will reduce the crop's production by more than 10 percent relative to when the last PAIR was performed or when the last liability reduction was made (e.g., loss determination), the insured must answer "YES". If requested by the AIP and/or the RO, hard copy records of acreage and production are required. These records may be necessary to assess the productive capability of the grove. |
| **Have trees been removed, buckhorned, top-worked or replaced with uninsurable trees resulting in a change of the original plant stand for any reported insurable acreage?** | If trees have been removed, buckhorned, top-worked or replaced with uninsurable trees resulting in a change of more than 10 percent of the original plant stand for any reported insurable acreage or relative to when the last PAIR was performed or when the last liability reduction was made (e.g. loss determination), the insured must answer "YES". If requested by the AIP or the RO, hard copy records of acreage and production are required. These records are sometimes necessary to assess the productive capability of the grove. |

**B. PAW Completion Instructions (continued)**

| | |
|---|---|
| **Estimated Production Boxes** | By Block, Enter An Estimate Of The Expected Production For The Acreage. Acreage With A Potential Of Less Than 100 Boxes May Be Excluded From Insurance.<br><br>If The Land Is Excluded, It Is Considered Not Insured; If It Is Insured, It Is Considered To Have Produced 100 Boxes Per Acre see Sec. 6(C) & (D) of the Florida Citrus Fruit CP. |

## 2008 Block Map

A block map of the acreage must be prepared by the insured in addition to the PAW.

(1) A block map is required from all new insureds.

(2) Carryover insureds must update the block map in subsequent crop years when changes occur to the grove, such as significant interplantings, tree removal/replacement, top-working, etc.

(3) Significant interplantings, uninsurable trees, and trees of differing ages and tree spacing must be recorded in order to determine the appropriate amount of insurance and insurable acreage.

(4) The insured may use GPS technology in conjunction with satellite imagery or aerial photos which clearly identify roads and field boundaries. The information contained on the block map may be overlaid on a digital photo, where the insured may identify roads, field boundaries, plot locations and plot numbers.

## 2009 PAIR Information

Florida Citrus Fruit and Macadamia Tree may require a PAIR. The PAIR must be completed within 60 calendar days after the ARD.

**Exception:** For Macadamia Tree applications filed after January 1 (of the initial crop year), see Para. 2010.

When an AIP expects that PAIRs cannot be completed within the established deadline, they must notify the RO in writing to request an extension of the PAIR deadline. The request must include the reason for the extension. The RO may establish a revised deadline based upon the information provided with the AIP's request.

## A. Florida Citrus Fruit PAIR Triggers

(1) The AIP must complete a PAIR and request a RO Determined Yield when any of the following triggers are met:

(a) When any damage (i.e., disease, hail, freeze) has occurred that will reduce the insured crop's production by 15 percent or more (after accounting for acreage reduction, see Para. 2031, relative to when the last PAIR was performed or when the last liability reduction was made (e.g., loss determination).

**Example:** A 100-acre grove was established in 1999. In 2015, a claim for tree loss due to freeze resulted in a reduction of 20 acres, leaving 80 insurable acres. On the 2019 PAW, the insured acknowledged damage to those 80 acres of trees as a result of tree disease.

The damage resulted in a reduction of crop production potential by 15 percent or more of the 2015 tree stand (the last time a PAIR was performed); therefore a new PAIR is required and a RO Determined Yield must be requested.

If a reduction of more than 10 percent in crop production potential (see Para. 2031D) is due to tree removal alone, the AIP will reduce the acreage based on the original planting pattern following the acreage determination procedure (see Para. 2031) without the requirement for a RO Determined Yield request.

(b) When production methods or cultural practices have reduced production by 15 percent or more relative to when the last PAIR was performed or when the last liability reduction was made, e.g., loss determination.

**Example:** To assess the reduction in production determine if the average canopy damage or removal through severe pruning across the grove is either: 1) 15 percent or greater or 2) greater than or equal to one-sixth of the typically pruned canopy volume.

**Exception:** If an acreage reduction is required as a result of procedure performed in A(1)(a) and (b) above, AIPs must adjust the insureds acreage to determine if the adjustment, see Para. 2031 C and D, constitutes a RO Determined Yield request.

After the acreage reduction the AIP determines the crop production will be reduced by 9 percent or less, the PAW should be corrected by the AIP, see Para. 2009, and no adjustment should be made;

**A. Florida Citrus Fruit PAIR Triggers (continued)**

If after the acreage reduction the AIP determines the crop production will be reduced by 10-14 percent, the AIP must adjust the acreage and a RO Determined Yield request is not required; or

If after the acreage reduction the AIP determines the crop production will be reduced by 15 percent or more, the AIP must submit a RO Determined Yield request.

(2) The AIP must complete a PAIR and no RO Determined Yield request is required in the following situations.

(a) When trees have been removed or replaced with uninsurable trees, resulting in a change of 15 percent or more of the plant stand for any reported insurable acreage relative to when the last PAIR was performed or when the last liability reduction was made, e.g. loss determination.

(b) For added land units, land not previously in the operation, that will increase the insured's acreage by 15 percent or more from the previous crop year.

(c) For carryover policies when the insured transfers to a different AIP, unless the PAIR is provided by the ceding AIP.

(d) When spot checks are completed.

(e) For new insureds.

(f) When requested by RMA.

**B. PAIR Requiring a RO Determined Yield Request**

In addition to A(1), if the AIP has adjusted the insured's insurable acres and determines that a reduction in the crop's production potential of 15 percent or more on the remaining acres still exists, see Para. 2031 e.g., due to canopy damage that can be remediated through severe pruning or other cultural measures, a RO Determined Yield request is required and a reduction in the applicable amount of insurance may be required, see Para. 2031D and 2033.

### C. Previous Adjustment(s) to the Dollar Amount of Insurance

The insured crop's dollar amount of insurance was previously adjusted:

(1) due to a reduction of the crop's production potential; and/or

(2) an adjustment to the crop's insurable acres which resulted in a comparable loss in yield see Para. 2033.

In one or more of the last five years, then the AIP apply the reductions to the dollar amount of insurance on the current Acreage Report, see Para 2033, unless an increase to the dollar amount of insurance has been provided by the RO, see Para. 2031, or further reduction has occurred which results in an additional RO Determined Yield Request.

### D. Processing Acreage Reports

Acreage reports cannot be processed until:

(1) AIP completes review of documentation;

(2) AIP initials any corrections found during review of a Florida Citrus PAIR on the PAW; and

(3) Any insurability determinations, including RO Determined Yields, are completed.

### E. PAIR Completion Instructions

The AIP or a person performing the inspection on behalf of the AIP will conduct the PAIR. The person completing the inspection must possess training equivalent to that of a loss adjuster.

| ELEMENT | REQUIRED INFORMATION |
|---|---|
| **County and Policy Number** | County and policy number to which the acreage pertains. |
| **Insured's Name, Address, Phone Number** | Insured's name, address, and phone number. |
| **Legal Description** | Enter the section, township and range, or other descriptions for land if rectangular survey is not applicable. This may include GPS coordinates or other land identification.<br><br>If additional space is needed, attach a supplemental sheet. |

## E. PAIR Completion Instructions (continued)

| ELEMENT | REQUIRED INFORMATION |
|---|---|
| **Name of Owner** | Enter the names of other owners with an insurable share in the crop acreage (not SBIs). If none, enter "NONE". |
| **Name of Operator** | Enter the name of the operator(s). |
| **Crop Year** | Enter the appropriate year. |
| **Date Set Out/Grafted** | Enter the date the trees were set out/grafted. |
| **Month/Year Top-worked or Buckhorned** | Enter the month and year of top-working or buckhorning, if applicable, and enter the comment "top-worked" or "buckhorned" for trees top-worked or buckhorned within the last five policy crop years. |
| **Planting Pattern** | Designate the applicable planting pattern by entering one of the following:<br>"S" for Square Planting Pattern;<br>"B" for Hedgerow or Border Planting Pattern;<br>"Q" for Quincunx Planting Pattern;<br>"H" for Hexagonal Planting Pattern;<br>"D" for Double Row Planting Pattern; or<br>"O" for Other Planting Pattern |
| **Type** | Identify commodity type, group, subclass, and/or intended use as listed in the actuarial document(s). Separate line entries may be made, if applicable. |
| **Unit Number** | Enter the appropriate Unit Number. BUs and OUs are allowable as defined in the Florida Citrus Fruit CP. |
| **Block Number** | By line, enter the block number as identified on the block map.<br><br>Separate block numbers are required for each citrus fruit group within the insured crop and homogenous planting pattern of the citrus fruit group.<br><br>A homogenous planting pattern of a variety may or may not consist of different tree age classes (i.e., 5 years, 6-8 years, or 9 years and above).<br><br>For age classes within the block that cannot be separately plotted (subplots), use the age class with the greatest percentage of insurable trees in the block to determine the amount of insurance.<br><br>If the age classes within the block can be separately plotted (drawn out), the insurable acreage and amount of insurance are determined for each age class and reported on that basis. |

## E. PAIR Completion Instructions (continued)

| ELEMENT | REQUIRED INFORMATION |
|---|---|
| **Acres in Block** | Enter the insurable block acres, rounded to the nearest tenth.<br><br>For a block with percent stand of less than 90%, reduce the acreage by multiplying the total land acreage by the percent stand.<br><br>**Example:** For a 10-acre block after exclusion of canals or grove service roads with a 74% plant stand, the insurable acreage is 7.4 acres.<br><br>Drainage ditches and/or canals outside the planting pattern are not considered insurable acres. |
| **Tree Spacing** | Enter the average tree spacing, in whole feet, for the block. If there is a wide variation in spacing, enter "varying" and explain in "REMARKS". |
| **Number of Trees** | Verify number of insurable trees reported on the PAW and/or determine an accurate count. See section 6B of the CP. |
| **Number of Trees per Acre** | Verify the number of insurable trees per acre reported on the PAW and/or determine an accurate count. |
| **Insurable Condition** | Per line entry, evaluate and document the insurability of the trees. If the block contains trees that are damaged, subdivide the block and use separate lines for insurable and uninsurable acreage. |
| **Estimated Production Boxes** | By block, enter an estimate of the expected production for the acreage. Acreage with a potential of less than 100 boxes may be excluded from insurance by the insured.<br><br>If the land is excluded, it is considered not insured; if it is insured, it is considered to have produced 100 boxes per acre see Sec. 6(c) & (d) of the Florida Citrus Fruit CP. |
| **Tree Condition** | Determine tree condition and enter "excellent," "good," "average," "fair," "poor," or "other," as appropriate.<br><br>If the trees are suffering from disease, insect damage, or a physiological disorder, explain in "REMARKS". |

## E. PAIR Completion Instructions (continued)

| ELEMENT | REQUIRED INFORMATION |
|---|---|
| **Tree Age in Years** | Enter the tree age class with the greatest percentage of insurable trees in the block (i.e., 5 years, 6-8 years, or 9 years and above). Insurability of trees and the number of insurable acres must be determined prior to determining age tree class of the block for calculating the amount of insurance (see "Acres in Block" to determine the number of insurable acres).<br><br>Age of the block is calculated as follows:<br><br>**X** = Policy's Crop Year<br>**Y** = Set-Out/Grafted year<br>**Formula**: (X-Y) = **Age/Leaf Year**<br><br>Set out/graft year is influenced by the month of planting.<br><br>(1) The set out/graft year will be the actual calendar year for acreage planted, if set out/graft occurs:<br><br>(a) Between January 1 and April 30, for 2013 and prior calendar years; or<br><br>(b) Between January 1 and April 15 for 2014 and subsequent calendar years.<br><br>**Example 1:** A grove planted in March 2013 is insured on April 30, 2018 for the 2019 crop year (bloom is set in 2018). Crop year =2015 and set out year = 2013. The age/leaf year is:<br><br>2019-2013= **6 Age/Leaf Year**<br><br>(2) The set out/graft year shall be the year following the calendar year in which set out actually occurred, if set out/graft occurs<br><br>(a) Between May 1 and December 31 of 2013 and prior calendar years; or<br><br>(b) Between April 16 and December 31 of 2014 and subsequent calendar years.<br><br>**Example 2:** A grove planted in October 2005 is insured on May 1, 2018 for the 2019 crop year (bloom is set in 2018). Crop year = 2019 and Set out year = 2006. The age/leaf year is 2019-2006= **13 Age/Leaf Year** |
| **Totals** | Enter the totals from each column of Acres in Block, Number of Trees, and Number of Trees per acre. |
| ****Excluded Acreage** | Identify acreage which is uninsurable due to policy requirements such as trees not meeting age/leaf year requirement. |

## E. PAIR Completion Instructions (continued)

| ELEMENT | REQUIRED INFORMATION |
|---|---|
| **Has damage (e.g., disease, hail, freeze) occurred to the trees that will reduce the insured crop's production?** | When any damage (i.e., disease, hail, freeze) has occurred that will reduce the insured crop's production by 15 percent or more (after accounting for acreage reduction see Para. 2031) relative to when the last PAIR was performed or when the last liability reduction was made (e.g., loss determination), note the blocks where damage has occurred which may affect yields for the current crop year.<br><br>If damage is noted, explain in detail, noting the month/year of damage. |
| **Have cultural practices or production methods (e.g., buckhorning, transitioning to organic) been performed that will reduce the insured crop's production?** | When production methods being used would reduce production relative to when the last PAIR was performed or when the last liability reduction was made (e.g., loss determination) from the previous year (s) by 15 percent or more after accounting for acreage reduction see Para. 2031; or<br><br>When cultural practices have been performed that will reduce the crop production by 15 percent or more (after accounting for acreage reduction see Para.2031) of the planting pattern and/or the previous crop year(s) relative to when the last PAIR was performed or when the last liability reduction was made (e.g., loss determination).<br><br>Note the blocks where these practices or production methods have been performed which may affect yields for the current crop year, noting the month/year of when the practice or production method was performed. |
| **Has the dollar amount of insurance for the insured crop been previously adjusted due to a reduction of the crop's production potential?** | If applicable, review the submitted Acreage Report(s) to either verify the reduction has been performed for the current crop year or maintained from the previous crop years see Para. 2033.<br><br>Also, if necessary, note the condition of blocks where adjustments to the dollar amount of insurance have been previously performed, such as damage, nature of the tree stand, tree spacing variations, new set out or grafting dates, unusual conditions, and any reasons for non-insurability and/or any reasons for an increase to the dollar amount of insurance. |
| **Has an adjustment been applied to the crop's insurable acres which resulted in a comparable reduction in yield?** | If applicable, review the insured's submitted Acreage Report(s) to either verify the reduction has been submitted or maintained.<br><br>Also, if necessary, note the condition of blocks where adjustments to the dollar amount of insurance have been previously performed, such as damage, nature of the tree stand, tree spacing variations, new set-out or grafting dates, unusual conditions, and any reasons for non-insurability and/or any reasons for an increase to the dollar amount of insurance. |

## E. PAIR Completion Instructions (continued)

| ELEMENT | REQUIRED INFORMATION |
|---|---|
| **Have trees been removed, buckhorned, top-worked or replaced with uninsurable trees resulting in a change of the original plant stand for any reported insurable acreage?** | When trees have been removed, buckhorned, top-worked or replaced with uninsurable trees, resulting in a change of 15 percent or more of the plant stand for any reported insurable acreage relative to when the last PAIR was performed or when the last liability reduction was made (e.g. loss determination), note the blocks where this has occurred for the current crop year.<br><br>Explain in detail, noting the month/year of the changes. |
| **Block Map** | Verify the insured's block map and correct it if necessary.<br><br>1. Identify highways and other significant landmarks that can be used to help identify groves' locations.<br><br>2. Outline citrus block locations and identify block by block number.<br><br>Draw blocks in actual shapes and as close to scale as possible. Indicate which acreage has been excluded from coverage by labeling as "excluded."<br><br>3. Outline land ownership boundaries in red within each section involved. Indicate land ownership across section lines with tie bars. |
| **PAW Verification** | Verify the insured's PAW and correct if necessary. If corrections are made, the AIP is responsible for initialing and notating the corrections on the PAW. |
| **Fresh Fruit Records Verification** | For fruit insured as fresh, unless this requirement is waived through the Special Provisions, verify the insured has:<br><br>(a) fresh fruit sales records from one of the previous three crop years; or<br><br>(b) a current year fresh fruit marketing contract for acreage new to the operation or in the initial year of fresh fruit production. |
| **Weed Control Measures** | Describe weed control measures used for the unit. Include a description of the orchard. |
| **Fertilization Program** | Describe the fertilization program used for the unit. Include the insured's method of monitoring soil fertility, e.g., soil analysis, foliar analysis, or both. |

## E. PAIR Completion Instructions (continued)

| ELEMENT | REQUIRED INFORMATION |
|---|---|
| **Insect Control Measures** | Describe in detail insect control measures used (i.e., integrated pest management/calendar spray program):<br><br>Evidence of disease/insects (check one):<br><br>□ Rare □ Moderate □ Severe |
| **Tree Replacement Program** | If applicable, indicate if a tree replacement program is being carried out. Also if applicable, indicate if fumigation is being used in the replacement program. |
| **Crops Grown Primarily for** | Indicate what crops by unit are grown primarily for:<br><br>□ Fresh Market □ Processor □ Juice Market |
| **Unit Potential** | Determine the current unit potential:<br><br>□ Stable □ Declining □ Increasing |
| **Irrigation Water Source** | Describe in detail the irrigation water source:<br><br>Surface: ___Percentage of Total Supply<br><br>Irrigation District Name;<br><br>Allocation last year: ___Percentage of Normal<br><br>Expected allocation this year; ___Percentage of Normal<br><br>Irrigation Well(s):<br>___Percentage of Normal<br><br>How many wells? ___<br><br>Total gallons per minute? ___GPM<br><br>Water obtained through water transfer: ___acre feet per acre |
| **Tree Vigor** | Indicate if the trees have sufficient vigor to produce the dollar amount of insurance computed for this unit.<br>Indicate if the Plant Vigor is:<br><br>□ Good □ Average □ Poor |

## E. PAIR Completion Instructions (continued)

| ELEMENT | REQUIRED INFORMATION |
|---|---|
| **Aerial Photo(s)/Map(s)** | Attach any applicable aerial photo(s)/map(s) to the inspection report. |
| **Flood Hazards** | Enter Yes or No. If applicable, please explain if the unit is subject to above normal flood hazards. |
| **Soil Limitations** | Enter Yes or No. If applicable explain soil limitations present, e.g., slope, depth, drainage, Ph, saline/alkai, toxicity. |
| **Does Producer Perform Crop Protection According to Citrus Health Management Area (CHMA) Guidelines** | Determine if the producer perform crop protection according to Citrus Health management Area (CHMA) guidelines. If yes list the CHMA District. |
| **Percent Stand Block** | Determine the percent stand by block, see Para. 2031. |
| **Determine Whether The Current Observed Conditions Reconcile to Prior Records** | Review the most recent prior year's production and acreage as compared to the current acreage based upon the PAIR for the unit. Note any consistencies and reconcile tree removals, replacements, grafting, production or practice changes, etc. This review will assist in determining acceptability of prior production records and insurability determinations for the current crop year. |
| **Inspector Evaluation** | Please provide your evaluation of the management of the operation. Indicate if the operation was:<br><br>□ Above Average □ Average □ Below Average (check one)<br><br>Additionally, the AIP should enter notes pertinent to the grove inspection such as nature and degree of damage, nature of the tree stand, tree spacing variations, new set-out or grafting dates, unusual conditions, and any reasons for non-insurability.<br><br>Indicate if the grove conditions were:<br><br>□ Above Average □ Average □ Below Average (check one)<br><br>If more space is needed, enter additional information on a Statement of Facts and attach it to the inspection report. |
| **Action Recommended** | For the unit, please indicate the action recommended. Such as:<br><br>□ Acceptance<br>□ RMA RO Determined Yield Request<br>□ Rejection |

The AIP must inspect all acreage and complete a Macadamia Tree PAIR and plat map for insurable and uninsurable acreage listed on the acreage report.

## A. PAIR requirements

PAIRs may be initiated at the AIP's discretion; however, inspection must be performed:

(1) for all new applicants;

(2) for new added land units (land not previously in the operation);

(3) when any acreage is added under an existing policy (new acreage not previously in the operation meeting insurability); or

(4) the year following any substantial damage.

PAIRs involving applications filed after January 1 (of the initial crop year) must be completed prior to processing the application. If accepted, the application must be processed before the tenth day following the applicant's signature. If the application is accepted after January 1, insurance against excess wind will attach (for insurable acreage) on the tenth day.

(5) For damage or probable loss, when an indemnity will be claimed on any unit (see Sec. 10 of the CPs).

## B. Unreported Acreage

If the AIP finds unreported acreage during the insurance period that has not been damaged by an insured peril, the AIP must prepare a revised acreage report that includes all unreported insurable acreage not entered on the original acreage report.

## C. PAIR Completion Instructions

The AIP will conduct the PAIR. The person completing the inspection must possess training equivalent to that of a loss adjuster.

| ELEMENT | REQUIRED INFORMATION |
|---|---|
| **Name, Mailing Address, And Phone Number of Applicant** | Complete the appropriate information that corresponds with the insured. |
| **Was Acreage Report Verified?** | Answer "Yes" or "No". If "No" explain why in the "REMARKS". |

## C. PAIR Completion Instructions (continued)

| ELEMENT | REQUIRED INFORMATION |
|---|---|
| **Are other macadamia orchards owned or operated by the applicant or insured?** | Answer "Yes" or "No".<br><br>If "Yes", note the condition of the other Macadamia Orchards owned or operated by the insured.<br><br>In addition, note the physical location of where the orchard is located.<br>If necessary, enter additional comments in "REMARKS". |
| **Is orchard managed by owner?** | Check "Yes" or "No".<br><br>If "No", enter manager's name, address, and telephone number. |
| **Is orchard located in an established macadamia area?** | Answer "Yes" or "No".<br><br>If "No", explain the general growing conditions and where the orchard is physically located.<br><br>Enter additional comments in "REMARKS". |
| **Unit Number** | Enter unit number from the Summary of Coverage after it is verified to be correct. |
| **Variety** | Appropriate variety name. |
| **Acres in Plot** | Number of acres in plot, rounded to tenths. |
| **Tree Spacing** | Spacing in feet (e.g., 15 x 15). If spacing varies, enter "varying" and explain in "REMARKS". |
| **Tree Count** | Enter total number of trees on the plot acreage. Enter an estimate (identify as "Est") if accurate determination is impractical. |
| **Month & Year Set** | Enter the month and year of:<br><br>1) Original planting, or<br><br>2) Replacement, if more than 10 percent of the trees on any unit have been replanted in the previous 5 years. |
| **Tree Condition** | Enter "acceptable" or "unacceptable" as applicable.<br><br>Explain any "unacceptable" tree conditions in "REMARKS". |
| **Rate Area** | The correct rate class from the actuarial documents. Verify with the Summary of Coverage, and if the rate class is found to be incorrect, revise according to AIP instructions see the LAM. |
| **Weed Control Measures** | Enter one of the following:<br><br>a. "**CWC**" Chemical Weed Control;<br><br>b. "**W/O CWC**" Weed Control Without Chemicals; or<br><br>c. "**None**" No Weed Control. |

## C. PAIR Completion Instructions (continued)

| ELEMENT | REQUIRED INFORMATION |
|---|---|
| ****Excluded Acreage** | Identify acreage which is uninsurable due to policy requirements such as trees not meeting age/leaf year requirement. Leave unit column blank and enter "Excluded" in column for such acreage. |
| **Result of Inspection Check "A" or Check "B"** | **Check "A" if:** There are no indications of a change in the data reported.<br><br>**Check "B" if:** There are changes needed. Enter "A Revised Acreage Report". |
| **Remarks** | Note any of the following:<br><br>(1) The number of trees in the original planting pattern.<br><br>(2) If more than 10 percent of the trees on any unit have been replaced, enter the total number of trees per acre in new pattern, and the total number of new trees set out with the appropriate dates.<br><br>(3) If any insurable tree acreage is set out in a new pattern (intersets), enter the number of trees per acre in a new pattern, and the total number of new trees set out with the appropriate dates.<br><br>(4) Any unusual conditions in the orchard or local growing area.<br><br>(5) Variations in tree spacing within an orchard.<br><br>(6) Any reasons for not recommending insurance coverage.<br><br>(7) Note any damage (e.g., disease, hail, freeze, freeze, etc.) that will reduce the productivity, where such damage occurred and determine whether such damage may affect the yield potential for the current crop year. Explain in detail and provide the month/year of damage.<br><br>If more space is needed, enter additional information on a Statement of Facts form and attach it to the inspection report. |
| **Is application/acreage report recommended for acceptance?** | Check "Yes" or "No" box, as applicable. |
| **Orchard Inspector's Signature** | Inspector signs report. |
| **DATE** | Inspector enters date of report (MM/DD/YYYY). |

**2011-2020 (Reserved)**

## 2021 Florida Citrus RO Determined Yield Request

A RO Determined Yield Request for Florida Citrus must include all of the following:

(1) the PAW, including to the block map (color satellite imagery, if available);

(2) the acreage report;

(3) a current PAIR;

(4) color photos representative of the condition of the grove or sub-grove(s);

(5) if not already documented on the PAIR, a narrative providing details addressing:

(a) The health or condition of trees in the grove or sub-grove(s);

(b) The causes (insured or uninsured) and estimated dates of the tree canopy damage or change in cultural practice;

(c) The expected production of the grove (i.e., more specific than indicating that production will exceed the 100 boxes threshold for acreage exclusion); and

(6) any additional supporting documentation.

(a) The RO will utilize any additional supporting documentation (e.g., letters from agricultural experts, lab reports, etc.) that may be useful in determining the appropriate amount of insurance on which the premium and any indemnity will be based.

(b) For a policy where additional damage has occurred since the last liability and/or acreage adjustment(s), prior year Acreage Reports that document the adjustments should be included with the RO Determined Yield Request.

**Exception:** An untimely RO Determined Yield Request will be accepted at any time when the request is based on a situation that requires a reduced dollar amount of insurance for the current crop year.

## 2022-2024 (Reserved)

**2025 General Information**

Leaf Year is the policy crop year that is designated by the calendar year following the year in which bloom is normally set. Florida Citrus Fruit and Macadamia Tree age or leaf year determinations:

**A. Florida Citrus Fruit**

The age/leaf of a tree is calculated as follows:

**X =** Policy Crop Year
**Y =** Set-Out/Grafted Year
**Formula:** ( X – Y ) = **Age/Leaf Year**

The Policy Crop Year is designated by the calendar year following the year in which bloom is normally set.

The Set Out/Graft Year is influenced by the date of planting.

**Note:** When top-worked the RO reduces the yield, but the leaf year is not affected. A grafted year is not applicable when a tree is only top-worked.

(1) The set out/graft year will be the actual calendar year for acreage planted, if set out/graft occurs:

(a) Between January 1 and April 30, 2013 and prior calendar years; or
(b) Between January 1 and April 15 of 2014 and subsequent calendar years.

**Example 1**: A grove planted in March 2013 is insured on May 1, 2018, for the 2019 crop year (bloom is set in 2018). Crop year = 2019 and set out year = 2013.

The age/leaf year is:

2019-2013 = **6 Age/Leaf Year**

(2) The set out/graft year shall be the year following the calendar year in which set out actually occurred, if set out/graft occurs:

(a) Between May 1 and December 31 of 2013 and prior calendar years; or
(b) Between April 16 and December 31 of 2014 and subsequent calendar years.

**Example 2:** A grove planted in October 2005 is insured on May 1, 2018, for the 2019 crop year (bloom is set in 2018). Crop year = 2019 and Set out year = 2006.

The age/leaf year is:

2019-2006 = **13 Age/Leaf Year**

**B. Macadamia Trees**

Age is defined as the number of complete 12-month periods that have elapsed since the month the trees were set out or were recently grafted, whichever is later. An age determination will be made for each unit, or portion thereof, as of January 1 of each crop year.

Crop year is defined as a period beginning with the date insurance attaches extending through December 31 of the same calendar year. The crop year is designated by the year in which insurance attaches.

The age/leaf of a Macadamia Tree is calculated as follows:

**X =** Policy Crop Year
**Y =** Set-Out/Grafted Year
**Formula:** ( X – Y ) - 1 = **Age/Leaf Year**

**Note:** When top-worked the RO reduces the yield, but the leaf year is not affected. A grafted year is not applicable when a tree is only top-worked.

The 12-month period is defined as the actual 12-months that have passed since the crop was set out/grafted. To be insurable in crop year 2019 they must have been set out prior to January 1, 2018.

**Example:** Acreage planted in April 2013. Insurance begins on January 1, 2019. Crop year = 2019 and Set out year = 2013. The age/leaf year is:

(2019 – 2013) - 1 = **5 Age/Leaf Year**

For the 2019 crop year, the 12-month period is determined as follows:

| SET OUT/GRAFTED | 12 MO. PERIOD | CROP YEAR | AGE |
|---|---|---|---|
| April 2013 | Jan. 1, 2015 | 2014 | 1 |
| | Jan. 1, 2016 | 2015 | 2 |
| | Jan. 1, 2017 | 2016 | 3 |
| | Jan. 1, 2018 | 2017 | 4 |
| | Jan. 1, 2019 | 2018 | 5 |

**2026-2030 (Reserved)**

## 2031 General Information

Florida Citrus Fruit acreage measurements will be based on land acres as provided in Part 15 Section 2. Florida Citrus Fruit also requires the following additional procedures for acreage determinations.

### A. Land Acreage Not Exceeded

The insured acreage cannot exceed the physical amount of land acreage. If an insured interplants two citrus crops, the acreage will be prorated according to the percentage of the insurable land acres occupied by the crops interplanted.

**Example:** An insured has 10 acres of grapefruit planted at a spacing of 30 feet x 30 feet, and decides to interplant with early oranges. Orange trees are interplanted between the grapefruit trees within the row.

The tree spacing has been changed to 30 feet x 15 feet, but there is no increase in the acreage. There is a 5 acre unit of early oranges and a 5 acre unit of grapefruit, NOT 10 acres of each.

The same instructions apply if more than one citrus fruit is planted on the same acreage; e.g., 10 acres of early and mid-season oranges (50/50mix) does not represent 10 acres of early oranges and 10 acres of mid-season oranges.

### B. Non-Cropland

Non-cropland, including drainage ditches and/or canals outside of the planting pattern, must not be included as insurable acreage.

### C. Percent Stand

Florida Citrus Fruit require adjustments to insurable acreage when the percent stand is less than 90 percent. AIPs must first determine the number of insurable acres, followed by any percent stand adjustments to the insurable acres.

(1) When the original planting pattern is changed due to replanting trees in a higher density planting pattern, an average planting pattern should be calculated for the purpose of calculating percent stand see Exh. 20.

(2) When a stand reduction of more than 10 percent has not been reported and is discovered after insurance has attached, refer to section 6(g) of the BP and Para. 2031 for instructions on reducing the amount of insurance.

(3) The AIP may increase the acreage, without RO approval, when previously reduced acreage is increased due to replanting of previously missing trees that have reached insurability.

**D. Acreage Adjustments**

After acreage has been determined, plots/sub-plots containing dead, damaged, missing, or uninsurable trees exceeding more than 10 percent of the original planting pattern must have the acreage reduced following the percent stand reduction procedures provided in the SP. Only trees that meet the insurability requirements contained in the CP and the SP are to be counted for comparison with the original planting pattern when determining the percent stand.

**Example:** The insured has 10 acres of citrus with an original planting pattern of 12 ft x 24 ft (151 trees per acre). The insured reports 1,270 trees (of an original planting of 1,510 trees) on the PAW.

The percent stand is 84 percent (1,270 divided by 1,510). The insurable acreage will be adjusted to 8.4 acres on the acreage report (10 acres multiplied by 0.84). See Exh. 20 for additional examples.

**E. Block**

For the purposes of determining the amount of insurance, the age class for the block/sub-block must be determined within a unit on a block basis. A block is a homogenous planting pattern of a citrus crop that may or may not consist of different tree age classes (5 years, 6-8 years, or 9 years and above).

(1) If a specific block can be identified for any of the age classes identified above, that age class must be separately reported to determine the insurance guarantee and insurable acreage.

If age classes within a block can be separately plotted (drawn out), the insurable acreage and amount of insurance are determined for each age class and reported on that basis.

(2) If a block/sub-block is inseparable by age class, use the age class within the block/sub-block with the greatest percentage of insurable trees to determine the insurance guarantee. Only trees that meet the insurability requirements contained in the CP and the SP are to be counted as part of the corresponding age class for determining the greatest percentage when assigning the appropriate age class for insurance guarantee.

**Example:** A producer has a grove of grapefruit trees. Separate plots, by age class, cannot be determined. The 9 year or older trees represent the largest percentage in the plot; therefore, the grove will be insured as 9 year old trees.

**E. Block (continued)**

(3) The unit may consist of several plots of the same citrus crop. Each unit and each block within a unit must be separately listed, and the amount of insurance and insurability determined accordingly.

## 2032 Excluded Acreage

The reference to "Excluded Acreage" refers to any acreage in a grove that does not meet the conditions of insurability based on grove age or production or any acreage that according to policy the insured may elect to exclude. The following Category D crops require special or additional procedure for excluded acreage:

**A. Florida Citrus Fruit**

Prior to the date insurance attaches, with AIP approval, the insured may elect to insure or exclude from insurance any insurable citrus acreage that has a potential production of less than 100 boxes per acre. If the insured elects to:

(1) insure such acreage; the potential production will be 100 boxes per acre when determining the amount of loss.

(2) exclude such acreage (the acreage is disregarded for all purposes), the acreage adjustment should be done prior to determining the potential production of the acreage, to reflect percent stand on the insured acreage.

**Example:** A 100-acre unit of X citrus fruit group has a 95 percent stand and a 9,000-box potential.

The average potential production is 90 boxes per acre and the insured may elect to exclude the acreage from coverage.

However, if the same 100-acre unit has a 75 percent stand and a 9,000-box potential, the insurable acreage will be 75 acres (100 acres x 0.75 = 75 acres) and the average potential production will be 120 boxes (9,000-box potential ÷ 75 acre = 120 boxes/acre). The acreage cannot be excluded from coverage.

**B. Macadamia Trees**

(1) Macadamia Trees are excluded from coverage when:

(a) orchard practices listed on the actuarial documents are not carried out;

(b) trees are maintained or set out for experimental purposes;

**B. Macadamia Trees (Continued)**

(c) an incomplete PAIR is completed for an insurance application; and/or

(d) trees are grafted onto existing rootstock or nursery stock within the one-year period prior to the date insurance attaches.

(2) Identify and explain any uninsured acreage in the "REMARKS" section of the acreage report.

(3) The AIP may exclude from insurance or limit the amount of insurance on any acreage which was not insured the previous crop year. Any excluded acreage must be noted as excluded acreage on the block map and the PAIR.

**C. Tomatoes – Fresh Market Dollar Plan**

The AIP must determine, through the insured, whether all acreage within the field is planted or if there are any areas of the field that are not planted such as unplanted headlands, field roads, and/or other areas not part of the planting pattern used for spraying and care of the crop, because unplanted acreage is not insurable.

Based on the Fresh Market Tomato CP, when the insured reports row widths greater than 6 feet, AIPs must determine the insurable acreage using the following method:

(1) divide 6 by the reported row width (i.e., reported 8-foot row width) 6 ÷ 8 = .750 factor; and

(2) multiply the reported field acres by the factor to establish the insurable acreage that will be entered on the acreage report (i.e., reported 20.0 acres within the field multiplied by the factor .750 = 15.0 insurable acres).

## 2033 Florida Citrus Fruit Liability Adjustment Determination

Florida Citrus Fruit requires an adjustment to the dollar amount of insurance consistent with section 3(d) of the CP when a reduction of the crop's production potential and/or an adjustment to the crop's insurable acres, see Sec. 2009A results in a comparable loss in yield.

**A. Dollar Amount of Insurance Reduction**

As a result of the loss in yield, a RO Determined Yield must be requested in order to reduce the amount of insurance and a Guarantee Adjustment Factor assigned by the RO. The AIP must multiply the Guarantee Adjustment Factor by the Reference Maximum Dollar Amount. Any unit (grove or sub-grove) that has had a reduction to the dollar amount of insurance must be reported to PASS with the Guarantee Adjustment Type Code of "D".

## 2033 Florida Citrus Fruit Liability Adjustment Determination (Continued)

### A. Dollar Amount of Insurance Reduction (Continued)

**Example:** An 80-acre unit of Citrus Fruit has sustained significant damage since the last PAIR was conducted due to successive winter freeze events.

After acreage reduction has been performed on 60 acres of the reported 80 acres due to tree removal as a result of the winter freeze events, the remaining acreage resulted in a reduced average canopy volume across the unit of 25 percent and a comparable loss in yield. The reduced productive capacity and the loss in yield triggered a RO Determined Yield.

### B. Maintaining the Dollar Amount of Insurance Reduction

If the dollar amount of insurance for the insured crop has been previously adjusted due to a reduction of the crop's production potential which resulted in a comparable loss in yield, and submitted to PASS with the Guarantee Adjustment Type Code of "D", this reduction is required to be maintained until an increase to the dollar amount of insurance has been requested.

Any unit (grove or sub-grove) that has previously received a reduction to the dollar amount of insurance and has not requested an increase to the dollar amount of insurance as a result of the previous reduction must be reported to PASS with the Guarantee Adjustment Type Code of "D".

### C. Dollar Amount of Insurance Increase

A RO Determined Yield must be requested in order to increase the previously reduced dollar amount of insurance on any unit (grove or sub-grove) that has had a reduction to the dollar amount of insurance and been reported to PASS with the Guarantee Adjustment Type Code of "D".

## 2034 Macadamia Trees Liability Adjustment Determination

Macadamia Trees require a liability adjustment if the percent stand is 90 percent or less. If the stand is less than 90 percent, based on the original planting pattern, the dollar amount of insurance will be reduced by 1 percent for each percent less than 90 percent.

**Example:** The insured selects $1,000, and the remaining stand is 85 percent of the original stand. The amount of insurance on which the premium and any indemnity will be based is $950 ($1,000 multiplied by 0.95).

## 2035-2040 (Reserved)

## 2041 General Information

For Florida Citrus Fruit, when records are required, they must indicate the location, citrus fruit commodity and group.

**A. For Juice Fruit**

Acceptable records include trip tickets, processing records (load certificate summary from processing facilities and Citranet summaries), and test house inspection certificates from processing and re-grading facilities.

**B. For Fresh Fruit**

Unless otherwise provided in the SP, when a PAIR is required or if requested by the AIP or RMA:

(1) Acceptable fresh fruit sales records must be provided upon request from at least one of the previous three crop years; or

(2) A current year fresh fruit marketing contract must be provided for fresh fruit acreage new to the operation or for acreage in the initial year of fresh fruit production.

Acceptable records include trip tickets, run sheets, pack-out statements or year-end settlement sheets that indicate, by citrus fruit commodity/group, the number of standard (1 3/5 bu.) size boxes packed or the net weight of the packed fruit.

**Exception:** If production is marketed directly to consumers and daily sales records along with other receipts verifying the income from the sale of the crop are used as supporting documentation see Para. 1421, the receipts submitted must indicate the crop, the minimum production sold as fresh, the date the production was sold, the amount of production sold in the applicable unit of measure, and the price.

**Exception:** Pre-Harvest appraisals alone are not an acceptable production record for Fresh Citrus Fruit production see Para. 1421.

## 2042 (Reserved)

## 2043 General Information

Hybrid Seed Corn and/or Hybrid Sorghum Seed are Yield Based Dollar Amount of Insurance Plans that is grown under contract with a seed company. If the insured crop is under contract with different seed companies, the insured may elect coverage under separate policies or with different AIPs provided that all acreage of the insured crop in the county is insured.

## 2044 Different Coverage Levels

If the insured has separate policies by seed company, each policy can have different coverage levels. Any applicable indemnity payments must be coordinated between multiple policies.

## 2045 Units

Unit division is determined as follows:

### A. Production or Production and Acres Specific Contracts

There will be no more than one BU for all production contracted under each processor contract. For example, if an insured has three contracts with the same processor, the insured is eligible for three BUs. OUs are not applicable.

### B. Contracts Stating Acreage

Acreage that would otherwise be one BU may be divided into OUs provided OU qualifications are met (e.g., acreage located in separate, legally identifiable sections, etc.). See Part 20 Section 2.

**Exception:** OUs by IRR and NI practices are not applicable to Hybrid Sorghum Seed.

## 2046 County Yields for Hybrid Seeds

Yields are established by county and used to calculate the amount of insurance. The Hybrid Seed Yield that applies at each coverage level is in the actuarial documents. The insured may elect a coverage level (associated yield), as well as a price election.

## 2047 Amount of Insurance

The amount of insurance is the County Yield minus the minimum contract payment (in bushels) provided by the seed company times the price election. The amount of insurance for hybrid seed approximates the dollar value of insurance of corn or sorghum planted for grain. However, the basis of insurance for hybrid seed is female acres. Acreage planted to the male inbred line is not insurable.

## 2047 Amount of Insurance (Continued)

The insured must accurately report the acreage occupied by the female inbred line. The standard planting practice is to plant the male and female inbred lines in rows separated by normal spacing (e.g., two rows male and six rows of female-FFFMMFFF). This results in 75 to 80 percent of the total acreage being occupied by the female inbred line.

This is the concept underlying the determination of the amount of insurance. In some cases, the male inbred line may be inter-planted between normally spaced rows planted to the inbred female line. In this situation, the Hybrid Seed Yield is adjusted to reflect the level of coverage normally associated with field corn so that the amount of insurance for the two planting practices (standard planting and inter-planting) is equivalent.

## 2048 Minimum Contract Payment

A statement by the insured is required on the acreage report to identify the amount of any guaranteed minimum payment provided by the insured's contract with a seed company.

The amount of insurance must be reduced if there is a guaranteed minimum payment.

(1) Deduct any minimum payment that is denominated in bushels from the yield that is used to establish the amount of insurance.

(2) If the minimum payment is stated in dollars, divide the amount by the price election.

(3) Round the result to the nearest whole bushel and subtract it from the Hybrid Seed Yield.

## 2049 Yield Based Factor for Seed Companies

RMA will require additional information about a seed company’s operations, the inbred lines, and foundation seed projections from seed companies in some circumstances. These circumstances include very high expected yields for a particular hybrid, poor crop insurance experience, newly formed seed companies, previously limited production records submitted by a seed company, etc.

The RO will request additional information when needed. An annual update of actual and expected yields is required from each seed company as a prerequisite to calculating the Yield Based Factor (YBF) by RO.

## 2050 Approved Yields

The RO will provide approved yields for insured hybrid crosses upon request. Requests for approved yields must be received by the RO no later than the calendar date for the end of the insurance period. Requests submitted to the RO after the end of the insurance period may be authorized; however, the RO will provide the number of late requests by each AIP to the Reinsurance Services Division.

The AIP must request approved yields from the RO to determine hybrid seed corn or hybrid sorghum seed indemnities. Refer to Exh. 20 for loss notification and yield issuance processes. To calculate an approved yield for each insured hybrid cross, two types of yield history must be obtained from the seed company.

**A. Actual Yield Histories for Prior and Current Hybrid Crosses**

(1) Each year the hybrid seed company must timely report all actual yields for all hybrid crosses produced in the previous year and all expected yields for all hybrid crosses being produced in the current year on the "Hybrid Seed Template".

(a) The Hybrid Seed Coordinator from the appropriate RMA RO requests this data on the "Hybrid Seed Template" in correspondence sent directly to hybrid seed companies.

(b) The "Hybrid Seed Template" report must be completed by the hybrid seed company; the report will identify the plant/facility location and practice for each hybrid cross identification within 30 days after the acreage reporting date.

(c) From the reported data on the "Hybrid Seed Template" the RMA RO determines the Yield Based Factor (YBF) after the completed "Hybrid Seed Template" report is filed.

(2) The calculated YBF is used to calculate approved yields when actual yield history is limited for a hybrid cross the hybrid seed company intends to produce.

(3) Yield information from the "Hybrid Seed Template" report and the YBF are used by the RMA RO to calculate the approved yield for each hybrid cross by hybrid seed company plant location for the current crop year.

**B. Issuance of approved yields.**

The Hybrid Seed Coordinator/appropriate RO, calculates and issues approved yields for hybrid crosses when:

(1) The "Hybrid Seed Template Report" has been completed by an authorized hybrid seed company representative and submitted to RMA RO; and

(2) the YBF has been calculated by RMA RO using the data supplied by the hybrid seed company.

(3) The AIP receives the Approved Yields for the hybrids it insures through the RMA Regional Office Exceptions (ROE) application.

**2051 Value per Bushel**

The dollar value per bushel is calculated by the AIP at time of loss. It is multiplied by the seed production to count to obtain the value of seed production used to calculate the indemnity. The dollar value per bushel equals the amount of insurance (dollars) divided by the approved yield times the coverage level. A hybrid with one approved yield can have more than one dollar value per bushel because the amounts of insurance may vary.

$$\textbf{Dollar Value/Bu.} = \frac{\text{Amount of Insurance (Dollars/Acre)}}{\text{Approved Yield (Bushels/Acre)} \times \text{Coverage Level (\%)}}$$

**2052-2100 (Reserved)**

# PART 21 PECAN REVENUE
## Section 1 General Requirements

### 2101 Background

The Pecan Revenue program provides protection against insurable causes of loss for yield and/or a decline in market price. The Pecan Revenue is a continuous policy purchased in two-year coverage modules (i.e., insurance coverage remains at the same premium rate, coverage level, and guarantee for two consecutive years for the crop), except as provided in the CP and this procedure.

For the purposes of Pecan Revenue, references in the CIH to "yield" shall be used interchangeably with "yield or revenue".

Throughout this part, T-Revenues are used as the equivalent of a T-Yield for annual crops and assigned yields are also referred to as T-Revenue. One hundred percent of the T-Revenue is used in both instances, with the only difference being that assigned T-Revenues (referred to in this Part as "assigned T-Revenues") are retained in the APH database as they are being used in lieu of actual yields whereas T-Revenues used as the equivalent of T-Yields are replaced with actuals once 4 actuals yields are contained within the base period. AIPs may differentiate between these two different types of T-Revenues by including acreage with no corresponding production/yield when assigned T-Revenues are used.

### 2102 Insurability Requirements

To be eligible for coverage, an insured's acreage must:

(1) have produced at least 600 pounds or more of in-shell pecans per acre after any top work, in at least one of the four most recent crop years at the beginning of the two-year coverage module, unless otherwise authorized by SP or WA;

(2) contain at least one contiguous acre, unless otherwise authorized by WA;

(3) be planted to varieties or groups of varieties that are not specified as uninsurable in the SP;

(4) not be direct marketed to consumers, unless authorized by SP or WA;

(5) not include trees that are/have been hedged, unless authorized by SP or WA;

(6) be grown in an orchard that, if inspected, is considered acceptable;

(7) have a share by the insured; and

(8) not be interplanted with another perennial crop, unless authorized by SP or WA.

To qualify for a WA, the following conditions must be met. For counties:

(1) with actuarial documents, at least two years of production and gross sales records must be provided.

(2) without actuarial documents, four years of production and gross sales records must be provided. See CIH Para. 2117A, and WAH Para. 76 and Para. 85.

## 2103 Two-Year Coverage Module

The insured must insure the crop for both years of the two-year coverage module. The actuarial documents for the initial year of the two-year coverage module remain in force both years; and the insured's elections remain the same for both years of the two-year coverage module (e.g., unit structure, amount of insurance per acre, coverage level), with the following exceptions:

(1) Non-payment of premium results in cancellation, see Para. 2105;

(2) The insured fails to provide acceptable records necessary to determine a loss for OUs. See Para. 1086 for combining APH databases;

(3) Removal of a contiguous block of trees from the unit, see Para. 2117B;

(4) Damage to trees, see Para. 2117D;

(5) Added acreage more than 12.5 percent, See Para. 2119A;

(6) Change in practice or production methods, see Para. 2119G; and/or

(7) Late or unreported gross sales by unit, see Para. 2131C.

## 2104 Unit Division

The insured may elect:

**A. EU**

In addition to the requirements of Sec. 3 of Part 10, an EU must be:

(1) located on at least two parcels of non-contiguous land; and
(2) at least two of the parcels must contain at least the lesser of:

(a) 20 acres; or
(b) 20 percent of the insured crop acreage in the EU.

**B. BU**

See Sec. 1 of Part 10.

**C. OU**

OU(s) must:

(1) be located on non-contiguous land;

(2) have separate records of production for at least the most recent two consecutive crop years; and

(3) be elected on the acreage report the first year of the two-year coverage module.

## 2105 Premium

The AIP will terminate the policy for non-payment of premium in either year of the two-year coverage module after the ARD of the first year of coverage module, and before the second year. If a timely filed acreage report is provided for removed acreage and/or relinquished acreage (insured no longer has a share in the crop), no premium is due in the second year of the two- year coverage module for such acreage.

## 2106 Transfers

Insureds may not transfer policies to another AIP until the end of the two-year coverage module.

Transfer of coverage and right to indemnity may be used in the first or second year of the two-year coverage module, if executed by the ARD. See Para. 853 in the GSH for transfer of coverage and right to indemnity requirement.

## 2107 CAT Coverage

For pecan acreage, CAT coverage is equal to the approved average revenue times 27.5 percent.

## 2108-2116(Reserved)

## 2117 Acreage Reports

### A. Acreage Report Required for Both Years of the Two-Year Coverage Module

Insureds are required to submit an acreage report by the ARD for each year of the two-year coverage module.

If an insured does not submit an acreage report by the ARD for the:

(1) first year of the two-year coverage module:

(a) the AIP may choose to deny liability. If the AIP denies liability, no premium is due, or liability is established for either year of the two-year coverage module; or

(b) the AIP may determine acreage and assign the T-Revenue with a "B" yield descriptor in the SRH database for any applicable years that a Revenue Report is not provided. If the acreage is determined by the AIP, the assigned T-Revenues are used to calculate the approved average revenue for both years of the two-year coverage module.

(2) second year of the two-year coverage module:

the AIP must determine acreage and premium based on what was reported or determined in the first year of the two-year coverage module, and the approved average revenue for the first year of the two-year coverage module is used to calculate the approved average revenue for the second year of the two-year coverage module. See 2117A(1) if no acreage was reported the prior year.

### B. Removed Acreage

When an insured removes a contiguous block of trees:

(1) on or before the ARD, during the first year of the two-year coverage module, then the removed acreage must not be reported on the acreage report.

(2) after the ARD of the first year of the two-year coverage module, and on or before the ARD for the second year of the two-year coverage module, the removed acreage must be reported as zero acreage on the acreage report for the second year of the two-year coverage module.

**Note:** If acreage is removed after the first year's ARD of the two-year coverage module and before the second year's ARD this may result in the policy no longer qualifying for an EU or an OU. When this occurs, the unit structure will be BU for the remainder of the two-year coverage module.

**C. Added Acreage**

See Para. 2119A.

**D. Acreage Damage**

(1) For new insureds, once the acreage is inspected and the application accepted, subsequent damage from insured cause(s) is covered:

(a) if the entire acreage is damaged prior to application or the date insurance attached, the application is not accepted, and insurance does not attach.

(b) if part of the acreage is damaged, the application may be accepted; however, units with damaged acreage must be rejected and insurance does not attach to the damaged acreage.

(2) For carryover insureds, when damage to trees is reported:

(a) after insurance attaches and on or before the ARD, during the first year of the two-year coverage module, then the acreage is reported on the acreage report. The insurable acreage may be adjusted by the AIP and require a PAIR to be performed for the second year of the two-year coverage module.

(b) after the ARD of the first year and on or before the ARD for the second year of the two-year coverage module, the insurable acreage must be adjusted by the AIP and requires a PAIR to be performed.

(c) on added acreage that is damaged prior to the PAIR, see Para. 2149, the request is rejected and insurance does not attach.

(d) for damage resulting, before or after the ARD of any year of the two-year coverage module, if any reduction in production and damage to the trees of 15 percent or more across the grove, an insured, through the AIP, must request a RO Determined Yield, see Para. 2167D and CP 6(b).

**E. Relinquished Share**

(1) If the insured's share is relinquished on or before the ARD, insurance will not attach and no premium or indemnity is due;

(2) If the insured's share is relinquished after the ARD, coverage is provided for any insurable cause of loss prior to the date the share is relinquished and the entire premium is due. If this occurs during the first year of the two-year coverage module, the acreage is reported as uninsurable or zero acreage during the second year of the two-year coverage module; or

**E. Relinquished Share (Continued)**

(3) An insured may also execute a Transfer of Coverage and Right to an Indemnity for the relinquished acres. See Para. 2106.

## 2118 Acreage

**A. Acreage Determination**

Refer to Part 18 to determine acreage. Para. 1807 General; Para. 1808 Acceptable Forms of Acreage Measurement; Para. 1809 Acreage Measurement Methods; and Para. 1811 Prior Removed Acreage.

**B. Pecans Trees with No Established Planting Pattern**

To calculate acreage for pecan trees with no established planting pattern, see Exh.18, use the formula below:

**A**= Acres
**N**= Number of trees in the orchard/grove
**Formula:** N ÷ 14 = **A**

**Example**:
31 ÷ 14= 2.214 rounded to 2.2 acres

**Note:** 14 trees per acre is used as the standard number of trees per acre, not to exceed the physical number of acres.

## 2119 Changes to the Amount of Insurance

The amount of insurance per acre will remain the same as stated in the Summary of Coverage for each unit, for each year of the two-year coverage module, with the following exceptions:

**A. Added Insurable Acreage**

If the insured reports additional insurable acreage in the second year of the two-year coverage module, the added acreage must be added to an existing unit on the acreage report by the ARD.

(1) For OU, the added acreage must be:

(a) added to the unit contiguous to the added acreage; or

(b) added to the unit with the greatest number of insurable acres if the added acreage is not contiguous with an existing OU.

(2) For BU, the added acreage must be:

(a) added to the existing BU, if only one exists; or

**A. Added Insurable Acreage (continued)**

(b) added to an existing BU with a similar share arrangement (e.g., 50 percent share in both or same landlord); and

(c) if neither a or b above are applicable, added to an existing BU with the greatest number of insurable acres if more than one BU exists.

(3) For all unit structures (EU, BU, OU), the AIP must determine if the acreage is more than 12.5 percent of the first year's insured acreage for the unit to which the acreage is added.

If the added acreage is:

(a) greater than 12.5 percent:

(i) a Revenue Report must be provided by the insured by the ARD of the second year of the two-year coverage module, see Para. 2131 for Revenue Reporting and Para. 2141E for SRH database Added Acreage;

(ii) the amount of insurance per acre for the second year of the two-year coverage module must be recalculated for the unit with the added acreage;

(iii) the AIP must establish a new SRH database for the unit to which the acreage was added if:

(A) there are assigned T-Revenues in the SRH database for the added or existing acreage;

(B) the added acreage is non-contiguous to acreage in the existing OU; or

(C) the added acreage will meet requirements for a separate BU in the next two-year coverage module.

**Note:** For the subsequent two-year coverage modules, i.e., the first year of the next two-year coverage module, the added insurable acreage may be separated into an additional unit if the acreage meets all of the requirements in the CP to qualify for a separate BU/OU.

(b) 12.5 percent or less:

(i) the added acreage must be reported on the acreage report, by the ARD; and

(ii) the amount of insurance per acre remains the same as the first year of the two-year coverage module.

**A. Added Insurable Acreage (continued)**

For subsequent two-year coverage modules, i.e., the first year of the next two-year coverage module, the amount of insurance per acre for the SRH with the added acreage, see Para. 2141E must be recalculated using the revenue reports for the added acreage, if available, and/or an assigned T-revenue to determine the amount of insurance for the added acreage for any years that revenue reports are not provided.

**B. Gross Sales Reduced Below the Approved Average Revenue**

Any action taken by the insured that may reduce the gross sales per acre below the approved average revenue, will result in an adjustment to the approved average revenue. See Sec. 2 and Para. 2148.

**C. Failure to Report Gross Sales for the Previous Two-year Coverage Module**

See Para. 2131C.

**D. Failure to Provide Acceptable Records for Determining an OU Loss**

See Para. 2141D.

**E. Removed Acreage**

See Para. 2141F for procedures. If an insured has both removed and added insurable acreage in the second year of the two-year coverage module, complete the removal procedures before completing the added acreage procedures in Para. 2119A.

**F. Damaged Acreage**

See Para. 2117D.

**G. Change in Practice or Sequential Thinning**

See Para. 2146.

**H. Late Or Unreported Gross Sales By Unit**

See Para. 2131C.

**2120-2130 (Reserved)**

## 2131 Revenue Reports

The Revenue Report must be provided on or before the ARD for the first year of the two-year coverage module for the previous two crop years. The Revenue Report must be provided for each unit and share arrangement (landlord or tenant). When changes are made that require a revision to the amount of insurance per acre, see Para. 2119, Revenue Reports may be required to be provided on or before the ARD for the second year of the two year coverage module.

Although the policy allows an insured to use 4 years of T-Revenue to establish an SRH database, the AIP must verify that the acreage has met the policy requirements for production minimums using the insured's submitted Revenue Reports.

Assigned T-Revenue (Yield Descriptor "B") in the SRH are considered zero production when determining insurability.

### A. Acceptable Revenue Reports

Revenue reports must meet all the following to be acceptable.

(1) Include all acreage and production (insured and uninsurable/uninsured; harvested and appraised) in pounds for in-shell Pecans and gross sales by actuarial P/T/TMA, for each crop year in the two-year coverage module. Hedged and uninsurable acreage requires a separate Revenue Report. See Para. 2131D.

**Exception:** Insureds with commingled production between IRR and NI practices may use the commingled worksheet procedure in Para. 1853 to separate production.

(2) Revenue reports for the previous two crop years must conform to the unit structure (EU, BU, and/or OU) for the current crop year.

(3) To qualify for OU, the insured must certify production for at least the two most recent consecutive crop years for each OU.

**Note:** Par. 1088B does not apply. The CPs provide that if only two years of gross sales records are provided, the approved average revenue will be the average of the two most recent consecutive years of the gross sales per acre and two years of the T-revenue.

(4) Report all SRH crop years continuously for the SRH Database when multiple years of revenue and production history are certified; there cannot be a break in continuity of production history. See Para. 1306 and Para. 1307 for additional procedure related to continuity of production reports.

(5) Be supported by acceptable production evidence see Para. 2133 for production evidence requirements.

**A. Acceptable Revenue Reports (continued)**

(6) Be signed by the insured.

(7) Be submitted by the insured to the AIP by the ARD.

**B. Claims for Indemnity**

If a claim is filed for any year, the value of harvested production and appraised potential production used to determine the indemnity payment will be the production and gross sales for that year.

**C. Late or Unreported Gross Sales by Unit**

(1) If Revenue Reports are not provided or not provided timely, a gross sales amount will be assigned by the AIP for any crop year that was not reported, unless the AIP choses to deny liability for failure to provide an acreage report timely in the first year of the two-year coverage module. See Para. 2117A.

The revenue amount assigned will be not greater than the assigned T-revenue for the current two-year coverage module. APH plan assigned yield provisions, see Para. 1524 do not apply.

(2) If Revenue Reports are provided after the ARD for the first year of the two-year coverage module, the:

(a) Revenue Report(s) must be provided before the ARD of the second year of the two-year coverage module; and

(b) average gross sales per acre will be readjusted for the second year of the two-year coverage module, by unit, as applicable.

**D. Uninsurable Acreage**

(1) Uninsurable acreage must be reported on a separate Revenue Report.

(2) If the production and gross sales from uninsurable acreage is commingled with production and gross sales from insurable acreage, OU would no longer apply.

Total production and gross sales, unless a claim is filed, is divided by total acreage and used for all crop years that were commingled. The commingled production and all acreage are entered in the SRH database for the insured acreage, and the yield descriptor “AY” must be shown.

**D. Uninsurable Acreage (continued)**

The AIP must ensure that production minimums, see Para. 2102 are met for the commingled acreage.

(3) See Sec. 13(b) of the CP for determination at the time of loss.

## 2132 Revenue Report Required Elements

| ELEMENT | REQUIRED INFORMATION |
|---|---|
| **State<br>County<br>Policy Number** | State, county and policy number to which the report pertains. |
| **Insured's Name<br>Address Phone No.** | Name, address, and phone number. |
| **Identification Number and Type** | Enter the insured's identification number and the type of identification. |
| **Practice/Type/Map Area/Unit Number** | P/T/TMA and unit number. |
| **Legal Description, FSA Farm/Tract/Field Number** | Enter the section, township and range, or other descriptions for land if rectangular survey is not applicable. This may include GPS coordinates or other land identification.<br><br>If additional space is needed, attach a supplemental sheet. |
| **Other Person(s)** | Enter the names of other persons with an insurable share in the crop acreage (not SBIs). If none, enter "NONE". |
| **Record Type** | Indicate the type of acceptable records maintained for at least the last two crop years within the two-year coverage module for the base period. See Part 14 for description of types of records. |
| **Contract Number** | If applicable, enter the contract number(s) and buyer(s) name and phone number(s). |
| **Number of Trees** | Enter the total number of trees. |
| **Insurability** | Indicate whether acreage, production and gross sales being reported is from insurable, uninsurable, or uninsured acreage. |
| **Crop Year** | Enter the appropriate crop year within the two-year coverage module for the annual production and gross sales being reported. |
| **Multi Crop Year Reporting Reason** | Enter applicable reason an insured is reporting more than the most recent two crop years, such as:<br><br>certification of crop years not previously certified;<br>correction;<br>certification by new insured;<br>recertification for new actuarial offer;<br>recertification for new unit structure; or<br>other.<br><br>If not applicable, leave blank. See Para. 1303E. |

## 2132 Revenue Report Required Elements (Continued)

| ELEMENT | REQUIRED INFORMATION |
|---|---|
| **Gross Sales** | The insured's share of pounds harvested and/or appraised pecans times the applicable in-shell average price, in accordance with the CP, reported in dollars and cents. |
| **Total Pound Production** | Enter total pound production. |
| **Acres** | Enter planted acreage for each crop year within the two-year coverage module that production and gross sales are available multiplied by insureds share (net acres). |
| **Yield Descriptor** | Enter the appropriate yield type descriptor for average gross sales per acre. See Exh. 15. |
| **Yield in Pounds** | Enter the appropriate yield in pounds. The total in-shell Pecan pounds divided by the total number of net acres. |
| **Average Gross Sales Per Acre** | Enter the average gross sales which are the gross sales divided by the net acres rounded to whole dollars. |
| **Added Acreage** | Indicate whether Revenue Report is for added acreage. |
| **Insured Printed Name, Signature and Date** | Insured must sign and date Revenue Report. |
| **Comments** | Insured and/or AIP may provide any additional information. |

## 2133 Production Evidence

Settlement sheets, sales receipts, and final or year-end statements from a processor and/or buyer must indicate the weight of pecans harvested in pounds (in-shell basis rounded to the nearest whole pound) by variety excluding foreign material and the in-shell price received per pound for each day the pecans were sold (in dollars and cents). If in-shell pounds or price is not shown, documentation must be obtained to determine the in-shell pounds and price (e.g. in-shell price may be shown as the price; received per day of sales). When not all pecans have been marketed, the pounds of pecans in storage and the market price, as determined in accordance with the CP and SP, must be reported.

See Para. 1421 for acceptable pick records and use of pre-harvest appraisal for direct market sales. If direct market is allowed by the SP or by WA, the AIP must review for any required adjustments in determining market price.

## 2134 Excessive Actual Yield

Procedures for excessive actual yields apply to pecans. When identified, yields are adjusted as follows (see also Para. 1588 and Para. 1590):

(1) Simple average of all actual revenue yield(s) (including excessive actual yields prior to being adjusted) and assigned T-Revenue(s) for the same crop year for the same P/T and TMA (if applicable) for the crop in the county.

Use the applicable actual yield descriptor "AX", see Exh. 15 to identify the simple average actual yield used instead of excessive actual yields; or

(2) Applicable T-revenue, if the insured has no other applicable actual yields. Use a "TX" yield descriptor to identify when the applicable T-revenue replaces the excessive actual yield.

## 2135-2140 (Reserved)

## 2141 Summary of Revenue History (SRH) Database

For Pecan Revenue, the base period is determined by consecutive crop years, not calendar years, and consists of the consecutive crop years immediately preceding the current two-year coverage module, with a minimum of four, building to six crop years in two-year increments.

**Example:** For 2019, the current two-year coverage module provides coverage for the 2019 and 2020 crop years, and the base period in the SRH database includes, at a minimum, crop years 2018 through 2015.

### A. Establishing and Completing SRH Databases

(1) A SRH database is completed in two-year increments from Revenue Reports. One SRH database is completed by P/T/TMA as provided in the actuarial documents, by WA, and by unit. The SRH database is established the first year of the two-year coverage module and continues for the second year of the two-year coverage module.

**Exception:** Added Acreage, see Para. 2119A or Reductions due to PAW, PAIR and subsequent RO Determined Yield when applicable, see Para. 2167, and late or unreported gross sales, see Para. 2131C.

(2) When establishing an SRH database, at least one year of gross sales records provided from the most recent four crop years must show that the minimum production requirements in the CP for the acreage were met for the unit. If at least four prior consecutive years of gross sales records are not provided, the T-revenue for the current two-year coverage module is used to complete the SRH database as follows:

(a) if only one year of gross sales records are provided from the most recent crop year, AIPs must use four years of T-revenues with yield descriptor "B's".

(b) if two years of production and gross sales are provided from the most recent two consecutive crop years, use two years of actual yields with yield descriptors "A", as applicable plus two years of T-revenues with yield descriptor "B" to complete the SRH database for the base period.

If T-revenue (yield descriptor "B") is used in place of gross sales records, the "B"s may be replaced with actual gross sales in the next two-year coverage module.

(3) Block reporting is not applicable.

(4) Identify each value entered in the average gross sales of the SRH with the applicable yield descriptor, see Exh. 15W.

(5) Substitute yield, see Para. 1545 provisions are not applicable, i.e., YA.

**A. Establishing and Completing SRH Databases (Continued)**

(6) YE must be elected by the SCD of the first crop year of the two-year coverage module. Any actual yield in an eligible crop year the insured chooses to not exclude must be identified in the SRH database by the PRD of the first crop year of the two-year coverage module.

**B. When Reporting SRH Databases**

(1) See CP section 10(b) for changes in share on insurable acreage.

(2) See CP section 3(d)(2) and Para. 2119A for increase in previous year's insured acreage.

(3) See CP sections 3(e), 6(b) and Para. 2119E-F for removal of a contiguous block of trees or damage to trees.

(4) For changes that may occur after insurance attaches or during the two-year coverage module, see the CP and Para. 853 in the GSH, Transfer of Coverage and Right to Indemnity.

**C. Acreage Less than 1 Acre**

An SRH database cannot be established for acreage that is less than 1 acre, unless allowed by WA.

**D. Failure to Provide Acceptable Records for Determining an OU Loss.**

When an insured fails to provide acceptable records necessary to determine a loss for OUs, OUs will be adjusted or combined (see Para. 1086 for combining units) to reflect the actual unit structure at the time of discovery. The insured's amount of insurance per acre will be recalculated for the current crop year and the subsequent crop year of the two-year coverage module (provided another year remains in the two-year coverage module).

**E. Added Insurable Acreage**

Added insurable acreage applies to new producers or carryover insureds who have recently added land by recently purchasing or leasing perennial crop acreage which meets policy requirements. For acreage added in the second year of the two-year coverage module, see Para. 2119A.

(1) If using the gross sales records for the added acreage, the number of years used must not exceed the number of years in the insured's present SRH database. A minimum of two years (the most recent two years for the two-year coverage module base period applicable by county) must be shown on the SRH databases.

**E. Added Insurable Acreage (continued)**

(2) For the next two-year coverage module, the added net acreage and sales records with appropriate yield descriptor must be shown to account for the previous two crop years added insurable acreage within the prior two-year coverage module.

(3) Acceptable records of production and gross sales from the prior producer must be provided or a gross sales amount will be assigned (not to exceed the T-revenue for the current two-year coverage module). See also Para. 2150 for PAIR requirements.

(4) A separate SRH database must be maintained if T-revenues ("B" yields) are used to complete the SRH database for the added land when less than 4 years of actual yields are provided. Once initial (2 or 4) "B" yields roll out of the most recent four years, the SRH database(s) must be combined into one SRH database for the unit.

**F. Removed Acreage**

It is the insured's responsibility to account for all prior acreage reported on the PAW. For removed blocks, the insured must indicate the removal date for the applicable acreage on the PAW. The insured must continue to report the removed acreage on subsequent PAW(s) until the related production information no longer remains in the SRH database(s) unless such acreage is accounted for by RO adjustment.

If the removed block represents an entire SRH database, annotate the removal on the PAW the initial crop year, and in subsequent crop years no further reporting of the removed SRH database is required.

If the removed acreage is part of an existing SRH database, the insured, through the AIP, may request removal of the acreage from the SRH database by submitting a RO Determined Yield request.

The AIP should select the "Other" category on the RO Determined Yield request. If a RO Determined Yield for the removed acreage is not requested, the insured must continue to report the removed acreage on subsequent PAW(s) until related yields from the removed acreage no longer remain in the SRH database.

If a contiguous block of trees is removed from the unit after the ARD, the insured must report the removal on the acreage report within 3 days of the removal. See Sec. 3(e) of the CP and Para. 2119B above.

## 2142 Summary of Revenue History Required Elements

| ELEMENT | REQUIRED INFORMATION |
|---|---|
| **Insured's Name, Address, Telephone Number, and Identification Number** | Insured's name, address, phone number, SSN, EIN or RAN, and identification number type. |
| **State**<br>**County**<br>**Policy No.** | State, county and policy number. |
| **Crop Year** | Enter the first year of the two-year coverage module. |
| **Practice/Type/TMA/Unit No.** | P/T/TMA and unit number. |
| **Legal Description, FSA Farm/Tract/Field Number** | Enter the section, township and range, or other descriptions for land if rectangular survey is not applicable.<br><br>If additional space is needed, attach a supplemental sheet. |
| **Others Sharing in the Crop** | Enter the names of others sharing in the crop (this is not a SBIs or landlord/tenant policy). If none, enter "NONE". |
| **T-Revenue** | Enter the applicable T-Revenue. |
| **Crop Year of History** | Enter the appropriate crop year(s) within the two-year coverage module for production and gross sales being reported. |
| **Acres** | Applicable acreage of pecans multiplied by insured's share. |
| **Total Pounds Production** | Total pounds of harvested and/or appraised pecans, insured's share only (in-shell basis rounded to the nearest whole pound). |
| **Gross Sales** | The insured's share of pounds harvested and/or appraised pecans times the applicable in-shell average price, in accordance with the CP, reported in dollars and cents. |
| **Average Gross Sales Per Acre** | Enter the Average Gross Sales which is the Gross Sales divided by the Net Acres rounded to whole dollars**.** |
| **Yield Descriptor** | Indicate any yield descriptors that may apply for each average gross sales entered in the SRH database. See Exh. 15V for yield descriptors. |
| **Total Number of Years** | Enter the applicable total number of years. |
| **Total Average Gross Sales Per Acre** | Enter the total of the Average Gross Sales (the total of the Average Gross Sales Per Acre column). |
| **Approved Average Revenue Per Acre** | Enter the Approved Average Revenue Per Acre (the Total Average Gross Sales Per Acre divided by the Total Number of Crop Years) rounded to whole dollars. |
| **Yield In Pounds** | Enter the appropriate yield in pounds, see Para. 2132. |
| **Yield Indicator** | Indicate any yield indicators that may apply. See Exh. 15W for yield indicators. |
| **Required PAIR** | If a PAIR is required, the "Required PAIR" box must be checked when the acreage requires an inspection. See Para. 2148. |
| **Comments** | The insured and/or AIP may include any additional comments. |

## 2143-2144 (Reserved)

## 2145 PAW

The PAW is an insured's self-certification of the planting and other conditions of the pecans. The PAW is used by the AIP to determine insurability and other policy requirements.

### A. PAW Submission

The insured must complete and submit a PAW by the ARD for each year of the two-year coverage module.

### B. Failure to Submit a PAW

If the insured fails to complete and submit a PAW by the ARD, the AIP must either:

(1) obtain the required information from the insured;
(2) conduct a PAIR to determine the required information; or
(3) deny coverage for the crop year.

The AIP representative may assist the insured with the PAW completion.

## 2146 PAW Required Elements

| ELEMENT | REQUIRED INFORMATION |
|---|---|
| **Unit Number** | Enter the applicable unit number for the acreage. |
| **Block Number** | Enter block number if applicable.<br><br>When reporting by block show the block numbers to the third place (i.e., 001) |
| **Month/Year Planted** | Enter the month and year trees were planted. |
| **Month/Year Grafted** | Month and year of grafting to the current variety, if applicable; otherwise, enter N/A. |
| **Variety** | Name(s) of the variety(ies) contained in this unit whether specified in the actuarial document(s) or not. |
| **Type** | Enter the applicable type from the actuarial document(s). |
| **Number of Plants** | Enter the number of bearing trees which make up the unit. |
| **Plant Spacing** | Average tree spacing and/or pattern observed within this unit (example 18.5 X 20). See Exh. 18 for other patterns. |
| **Planting Pattern** | Enter:<br><br>"S" for Square Planting Pattern<br>"B" for Hedgerow or Border Planting Pattern<br>"Q" for Quincunx Planting Pattern<br>"H" for Hexagonal Planting Pattern<br>"D" for Double Row Planting Pattern<br>"O" for Other Planting Pattern |

| ELEMENT | REQUIRED INFORMATION |
|---|---|
| **Density** | Calculate the tree density (number of trees per acre) as follows:<br><br>number of square feet per acre ÷ number of square feet per tree (based on the current planting pattern)<br><br>There are 43,560 square feet per acre.<br><br>**Example:** Based on a tree spacing of 40 X 40 = 1600 square ft., the number of trees per acre is calculated as 43,560 square ft. per acre ÷ 1600 square ft. per tree = 27 trees per acre.<br><br>Or, if trees are being interplanted as a part of a tree replacement program and the spacing changes to 20 X 40 = 800 sq. ft., per tree, the correct density becomes 43,560 sq. ft. per acre ÷ 800 sq. ft. = 54 trees per acre. |
| **Acres** | Number of planted acres to tenths (0.1).<br><br>It is the carryover insured's responsibility to account for all prior acreage reported. Removed acreage, shown on the SRH, should continue to be shown on the PAW until they roll out and no longer remain on the SRH database, (e.g., line through block entries and show removal date, except as otherwise allowed see Para. 2141F). |
| **Percent Stand** | N/A |
| **Practice** | Designate if the block is:<br>irrigated or non-irrigated; and/or<br>certified organic or acreage transitioning to organic. |
| **Insurable or Uninsurable** | Designate whether this unit has met insurability requirements. Refer to the policy provisions, e.g., production minimums, direct marketed to consumer, etc., the actuarial document(s), and this procedure for determining insurable and uninsurable acreage.<br><br>**Example**: Acreage must be reported as uninsurable when minimum production requirements are not met.<br><br>When prior production or acreage is commingled, the entire commingled acreage must meet the production minimum requirements for insurability. Acreage combined to meet insurability requirements may require additional yield adjustment by the AIP or should be submitted as a RO Determined Yield Request. |

## 2146 PAW Required Elements (Continued)

| ELEMENT | REQUIRED INFORMATION |
|---|---|
| **Totals (For Acres and Number of Plants)** | This is the last row in the table on the form used to enter the summation of the total acres and total number of trees. |
| **IMPORTANT:** Prior to answering these questions, the approved average revenue per acre from the preliminary SRH database must be calculated. | |
| **Has Damage (E.G., Disease, Hail, Freeze) Occurred to Trees/Vines/Bushes/ Bog that Will Reduce the Insured Crop's Production from Previous Crop Years?** | An insured using organic practices must answer "YES" when the organic crop has been affected by prohibited substances, see Para. 1854.<br><br>If the insured answers "YES", then hard copy records of acreage, production, and gross sales are required.<br><br>If yes to damage caused by disease, list type of disease. |
| **Have Practices or Production Methods (e.g., Removal, Dehorning, Grafting, Transitioning to Organic) been Performed that Will Reduce the Insured Crop's Production from Previous Crop Years?** | An insured must answer "YES" when the insured transitions to organic practices (either transitioning to organic (with or without a plan)).<br><br>• An insured must answer "YES" when the insured is going from organic practices to conventional practices.<br><br>• Provided there are no other practice or production methods that will reduce the insured's crop production, acreage transitioning from transitional organic to certified Organic practices, or when certified acres must transition to organic (for example, prohibited substances required certified organic acreage to transition) an insured must answer "NO".<br><br>• See Para. 1854 for additional information on organic perennials.<br><br>If the insured answers "YES", then hard copy records of acreage, production, and gross sales are required.<br><br>Tree thinning, hedging and top-work is considered a cultural practice change that could reduce the insured crop's gross sales below the approved average revenue and/or make the crop uninsurable. |
| **Is the Current Water Supply (Surface Allotment/Well) Adequate to Produce a Normal Crop for the Crop Year Being Certified Above?** | For irrigated practice only.<br><br>If the insured answers "NO", hard copy records of acreage, production, and gross sales are required. |

## 2147 AIP PAW Review

The AIP must use the information provided by the insured on the PAW to determine:

(1) the insurable acreage for the current crop year; and
(2) if a PAIR must be conducted by the AIP.

## 2148 PAW Triggers a PAIR

A PAW triggers the need for a PAIR and a RO Determined Yield for insurability when the insured answers:

(1) Yes to whether or not "… damage (e.g., disease, hail, freeze) occurred to Trees/Vines/Bushes/Bog that will reduce the insured crop's production from previous crop years?".

(2) Yes to whether or not "have practices or production methods (e.g. removal, dehorning, grafting, transitioning to organic) been performed that will reduce the insured crop's production from previous crop years?".

(3) No to "Is the current water supply (surface allotment/well) adequate to produce a normal crop for the crop year being certified above?".

**Exception:** Unless the acreage is insured under a non-irrigated practice.

## 2149 PAIR

A PAIR is an underwriting tool used by the AIP to:

(1) establish insurability of the crop;
(2) evaluate the risk to be assumed by the AIP; and
(3) verify information provided by the insured on the PAW.

If the PAIR discloses that information provided on the PAW was incorrect or incomplete, the PAW must be corrected.

## 2150 PAIR Requirements

A PAIR is required for the current crop year when:

(1) required by the policy, SP, or for WA to determine insurability;

(2) triggered by the PAW;

(3) an insured either does not complete a PAW or does not complete a PAW in an acceptable manner;

(4) requested in writing by PM for county crop program;

(5) the AIP is mandated by the policy provisions and agree in writing as a condition of insurance attachment, see Para. 76 of the WAH;

(6) requested by the RO if a new PAIR is necessary for the RO to approve a RO Determined Yield;

(7) damage has occurred to trees;

(8) cultural practices have been performed that will reduce the insured crop's production and gross sales from previous levels;

(9) added acreage to a unit is greater than 12.5 percent of the existing acreage in the unit;

(10) a new application is submitted; a PAIR is required not later than 30 days after the SCD and the insured must be notified of acceptance or rejection of their application; or

(11) spot checks are completed.

## 2151 PAIR Waivers

PAIRs may be waived by RMA, in writing, when an excessive number of policies require PAIRs that cannot be feasibly accomplished. The RO may provide written approval to the AIP authorizing PAIR waivers, if the AIP provides:

(1) a written request to the RO;
(2) the reason for the waiver;
(3) documentation supporting an excessive number of PAIRs; and
(4) alternative means to reasonably assess the impact to the perennial crop.

## 2152 PAIR Deadline

The PAIR must be completed within 30 calendar days after the ARD. When a PAIR is required for a RO Determined Yield Request, it must be received in the RO no later than 45 calendar days after the ARD.

When an AIP expects that PAIRs cannot be completed within the established deadline, the AIP must notify the RO in writing to request an extension and include the reason for the extension. Based upon the information provided by the AIP, the RO may establish a revised deadline. The RO will not extend the deadline more than 60 calendar days after the ARD.

If the deadline for the RO Determined Yield Request is extended in accordance with Para. 2214, the PAIR deadline will be extended. The PAIR must be completed and submitted with the request.

PAIRs not completed by the deadline for the RO Determined Yield Request results in a RO Determined Yield not being issued.

**Exception:** A RO Determined Yield Request will be accepted at any time when the request is based on a situation that requires a reduced approved average revenue per acre for the current crop year.

**Exception:** New applications require a PAIR not later than 30 days after the SCD and the insured must be notified of acceptance or rejection of their application.

## 2153 PAIR Completion Requirements

### A. Inspector

The AIP, not the insured's agent, will conduct the PAIR. The person completing the inspection must possess training equivalent to that of a loss adjuster.

### B. Supporting Documentation

The AIP may request that the insured provide acceptable supporting acreage, production and gross sales evidence to assist with the completion of the PAIR.

### C. Insurable and Uninsurable Acreage

Complete a separate PAIR for insurable and uninsurable acreage.

## 2154 PAIR Required Elements

| ELEMENT | REQUIRED INFORMATION |
|---|---|
| **Number of Years Insured has Operated this Unit.**<br><br>**If Less than Three Years, Include Previous Owner Name and Address, if Known.** | Obtain this information from the insured.<br><br>This information will assist the inspector in determining the accuracy and completeness of the SRH databases and Revenue Reports.<br><br>If less than three years, include previous owner name and address, if known. |
| **Has this Unit Been Insured in Previous Years?**<br><br>**If Yes, Include the Number of Years Insured and Prior Policy Number(s).** | Enter "No" if the acreage in this unit has not been previously insured by the current insured or another producer.<br><br>Enter "Yes" if the acreage in this unit has been previously insured by the current insured or another producer.<br><br>If the unit was previously insured, review any previous PAIRs, PAWs and other policy information (e.g. SRH databases) to assist in the PAIR completion to understand any insurability concerns, whether changes have occurred in production practices or methods that may impact the insurability of the unit. |

| ELEMENT | REQUIRED INFORMATION |
|---|---|
| **Describe Weed Control Measures Used for the Unit.**<br><br>**Include a Description of the Orchard/Vineyard/Plantation/Field/Bog Floor Management, i.e., Sterile/Sod/Cover Crop.** | Review with the insured and explain in detail the cultivation and/or spray program used to control weeds.<br><br>Include a description of the current orchard or grove floor management (e.g., sterile/sod/cover crop, etc.). |
| **Describe the Fertilization Program Used for the Unit.**<br><br>**Include the Insured's Method of Monitoring Soil Fertility, e.g., Soil Analysis, Foliar Analysis, or both.** | Describe in detail the fertilization program being used for the unit. |
| **Describe in Detail the Insect Control Measures Used (I.E., Integrated Pest Management/ Calendar Spray Program)**<br><br>**Evidence of Disease/Insects (Check One):**<br><br>□ **Rare**<br>□ **Moderate**<br>□ **Severe** | Describe in detail the insect and disease control measures used by the insured (e.g., integrated pest management, a calendar spray program, methods used for organic practices, etc.).<br><br>Identify current evidence of disease/insects as: rare, moderate or severe. |
| **Is Tree/Vine/Bush/Plant Replacement Program Being Carried Out?**<br><br>**If Applicable, is Fumigation Used in the Replacement Program?** | Determine the insured's tree replacement program. Are dead or diseased trees replaced? If so, explain how.<br><br>If applicable, indicate if fumigation is used in the replacement program. |
| **What Date is Harvest Completed For the Unit Under Normal Conditions?** | Determine the normal harvest completion date from the insured. |
| **Describe in Detail the Use and Placement of Bees for Pollination.**<br><br>**Include Type, Quality, Quantity and Location.** | N/A |

| ELEMENT | REQUIRED INFORMATION |
|---|---|
| **Describe in Detail the Irrigation Water Source.**<br><br>**Surface:**<br><br>• **Percentage of Total Supply**<br>• **Irrigation District Name**<br>• **Allocation Last Year Percentage of Normal Expected Allocation**<br>• **This Year's Percentage of Normal**<br><br>**Irrigation:**<br><br>• **Wells: Percentage of Normal;**<br>• **How Many Wells?**<br>• **Total Gallons per Minute?** | Describe in detail the irrigation source(s).<br><br>Obtain from the insured, water source(s) and irrigation district(s) from which water is allocated, allocation percentage, and irrigation well information.<br><br>Include any information regarding water obtained through water transfers (transfer volume and number per year) and any potential curtailment of current and future water supplies, as well as pumping rate. |
| **Is the Unit Subject to Above Normal Flood Hazard? If so, Explain.** | Determine whether any abnormal flood hazards exist.<br><br>Explain in detail. |
| **Are There Soil Limitations (E.G., Slope, Depth, Drainage, pH, Saline/Alkali, Toxicity)?**<br><br>**If so, Explain.** | Discuss with the insured (and perform an assessment) to determine any potential soil limitations (e.g., slope, depth, drainage, pH, saline, or alkaline toxicity, etc.).<br><br>Other resources should also be considered when appropriate, such as soil maps.<br><br>Areas of frequent replanting or stunted growth may indicate that soil limitations exist.<br><br>Explain in detail. |
| **Describe in Detail:**<br><br>• **The Pruning Practices Used**<br>• **The Date Normally Completed**<br><br>**Indicate Whether Pruning is Annual or Biennial.** | Describe in detail the pruning practices used, date normally completed, and whether pruning is annual, biennial, etc.<br><br>Indicate if there is excessive pruning or top working which affect production of the crop to be insured. |

| ELEMENT | REQUIRED INFORMATION |
|---|---|
| **Describe in Detail the Varieties Being Used as Pollinator(s).**<br><br>**Include:**<br><br>• **Variety**<br>• **Location**<br>• **Quantity**<br>• **Density**<br>• **Configuration.** | Describe in detail the varieties used as a pollinizer when applicable.<br><br>Include variety, location, quantity, density, and configuration. |
| **Measured or Determined Acres of Unit**<br><br>**Total Unit Acreage Insurable and Uninsurable**<br><br>**Method(s) of Measurement** | Enter the total unit acreage (insurable and uninsurable) and the methods of measurement. |
| **Measured or Determined Acres of Unit**<br><br>**Total Unit Acreage Insurable** | Enter the total unit insurable acreage. |
| **Determine Whether Current Observed Conditions Reconcile to Prior Records** | Review the SRH database for prior production, gross sales, and acreage as compared to the current acreage and varieties based upon the PAIR.<br><br>Note any inconsistencies and reconcile tree removals, replacements, top-working, hedging, grafting, production or practice changes, etc.<br><br>This review will assist in determining acceptability of prior revenue records and insurability determinations for the current crop year. |

| ELEMENT | REQUIRED INFORMATION |
|---|---|
| **Percent Stand**<br><br>• **Less Than 50%**<br>• **50-60%**<br>• **61-70%**<br>• **71-80%**<br>• **81-90%**<br>• **91-100%** | N/A |
| **Determine the Current Unit Potential:**<br><br>□ **Stable**<br>□ **Declining**<br>□ **Increasing** | Evaluate and describe the unit's current crop potential as stable, declining or increasing. |
| **Do Trees/Vines/Bushes/Plants have Sufficient Vigor to Produce the Preliminary APH Yield Computed for this Unit?**<br><br>**Note Overall Plant Vigor as:**<br><br>□ **Good**<br>□ **Average**<br>□ **Poor** | These are subjective questions requiring evaluation of the unit's vigor relative to the preliminary SRH approved average revenue.<br><br>Note the amount of tree growth, limb size, and color, and other factors which indicate the unit's ability to produce the preliminary approved average revenue per acre.<br><br>Note the overall plant vigor as: good, average or poor. |
| **If Applicable, Provide Inside Bin Measurements** | N/A |
| **Insurable Acreage and Tree/Vine/Bush/Bog Information, Complete Check Boxes** | Complete a PAIR(s) for the acreage being inspected.<br><br>Verify PAW(s) entries, making any corrections needed, and initial the PAW. |
| **Uninsurable Acreage and Tree/Vine/Bush/Bog Information, Complete Check Boxes** | Complete a PAIR(s) for the acreage being inspected.<br><br>Verify entries on PAW(s), making any corrections needed, and initial the PAW. |

| ELEMENT | REQUIRED INFORMATION |
|---|---|
| **Obtain and Attach Aerial Photo(s)/Map(s).** | Obtain aerial photo(s) and/or maps (e.g., GPS) with blocks, units, and legal description, must be clearly identified.<br><br>When the aerial photo(s) and/or map(s) (e.g., GPS) are not available, include a hand sketch map with the following information:<br><br>(a) identify the location of separate units for the same insured. The unit location must identify roads, the nearest intersection, landmarks along with cardinal directions (e.g., a north arrow);<br><br>(b) identify the location of blocks within one unit. Sketch out the blocks, showing the exact location of each block in relation to other blocks in the unit. Label each block with a Block Number and any other applicable identification (e.g., home farm); and<br><br>(c) include an overall sketch map of all units. |
| **Additional Information and Comments (Attach Additional Sheets as Necessary)** | Additional notes and observations, which will assist the verifier in relating unit information to actual average gross sales contained within the SRH database.<br><br>Include additional sheets, as necessary, referencing appropriate items. |
| **Your Evaluation Of The Management Of This Operation: (Above Average; Average or Below Average)**<br><br>**Your Evaluation of the Orchard/Vineyard/Bog/ Grove/Field Condition: (Above Average; Average or Below Average)** | These are subjective questions requiring consideration for overall evaluation of management and conditions of the unit.<br><br>Evaluate each block to determine if light penetration into the canopy is sufficient to stimulate nut development. Rate as above average, average, or below average based on the Inspector's review. |
| **Action Recommended:**<br><br>**Acceptance, RO Determined Yield Request, Rejection** | Provide recommended action. Sign and date the report.<br><br>Attach, and if needed, provide any applicable PAIR, SRH database(s), PAW, revenue records, and acreage determinations. |

Key items the Inspector should consider in conducting the PAIR are:

(1) Age by block;

(2) Damage to the tree(s);

(3) Date of any sequential thinning or hedging;

(4) Whether the orchard/grove is being maintained in a recommended manner with adequate tree spacing, no over-crowding of adjoining tree branches, good orchard/grove floor management practice;

(5) Review of marketing methods. A review of records may determine whether any direct market of production occurred. Direct marketing is insurable only as provided by the SP or WA;

(6) Verification of correct practice in counties with separate irrigated and non-irrigated rated practices. If reported as irrigated, an adequate water supply and functional irrigation system must be verified;

(7) A review of production records to determine if the insured acreage meets the minimum production requirement of 600 pounds of in-shell pecans per acre unless otherwise provided in the SPs.

(8) Establish insurability of the crop;

(9) Evaluate the risk to be assumed by the AIP; and

(10) Verify information provided by the insured on the PAW.

The above key items, as well as, other information shown on the PAIR, and certification by the insured on the PAW/SRH, must be considered in completion of the PAIR.

**2155-2166 (Reserved)**

## 2167 RO Determined Yield Request

A RO Determined Yield may be requested, see Para. 1881 and Exh. 22, when applicable, for the following:

### A. Higher Yield Requests

Higher Yields can be requested for other changes in management practices (i.e., change in practice from non-irrigated to irrigated, RO determined yields "F" in two year increments up to the most recent four years may be applicable where higher non-irrigated history is provided).

Use special case indicator "H" for SRH databases identified by this criteria.

### B. Gross Sales Reduced Below the Approved Average Revenue Per Acre

Any action, including sequential thinning, that is taken that may reduce the insured's gross sales below their approved average revenue for a unit, may result in an adjustment to the approved average revenue.

Use special case indicator "PS" for SRH databases identified by this criteria.

### C. Change in Practice or Production Methods

Change in practice or production methods, triggers a PAIR and subsequent RO Determined Yield.

Use special case indicator "P" or "PM" for SRH databases identified by this criteria.

### D. Removed and/or Damaged Acreage

Damage resulting in any reduction in production and damage to the tress of 15 percent or more across the grove, triggers a PAIR and subsequent RO Determined Yield request.

Use special case indicator "PS" for SRH databases identified by this criteria.

## 2168-2200 (Reserved)

# PART 22 RO UNDERWRITING
## Section 1 Transmitting RO Determined Yield, and MY Requests

### 2201 ROE Requirement

(1) AIPs must transmit/log all RO Determined Yield (including MY) Request forms and supporting documentation electronically through the ROE system. If all required information is timely submitted to the AIP, these requests must be transmitted/logged no later than the applicable deadlines identified in Part 22, Section 2. Once the applicable information from the RO Determined Yield Request form is transmitted/logged into the ROE system, a folder is created for uploading the supporting documentation. Do not transmit the supporting documentation via e-mail, postal delivery, or facsimile.

**Note:** The official transmission date of the RO Determined Yield Request to the RO is the date the AIP uploads the first document containing supporting documentation to the ROE system.

If an unforeseen circumstance (such as the unavailability of the ROE system, AIP outage, etc.) occurs that prevents the AIP from transmitting/logging the RO Determined Yield Request information electronically through the ROE system by the applicable deadline, the AIP should contact the RO prior to the applicable deadline to make other arrangements with the RO to transmit (such as by facsimile, postal delivery, etc.) the RO Determined Yield Request and any supporting documentation. The RO must approve the AIP's request for the alternative method of submission, and the RO Determined Yield Request form and any supporting documentation must still be submitted to the RO no later than the applicable deadlines in Part 22, Section 2.

**Note:** In this event, the official transmission date of the RO Determined Yield Request to the RO is the date the RO receives the request.

(2) The AIP must upload legible supporting documentation, including the RO Determined Yield Request form, to the ROE system folder created for the associated RO Determined Yield Request no later than the applicable deadlines identified in Part 22, Section 2 to avoid having the request be incomplete. If technical issues exist that prevent uploading the supporting documentation, contact the RO. Do not submit supporting documentation in hard copy format to the RO unless arrangements have been made with the RO, as stated in (c) below. Any documentation submitted to the ROE system folder later than the applicable deadlines in Part 22, Section 2 will be considered late.

(a) Scan the supporting documentation such that the electronic copy is clearly legible in Adobe (.pdf) format. If color is critical to the interpretation of the image, provide color images. The AIP should scan the supporting documentation where all pages can be viewed upright, to the extent possible.

(b) The AIP should keep screen shots of the uploaded information to substantiate the date, time, supporting documentation, etc., of the attempted delivery in case of failure of the delivery attempt.

(c) If an unusual case arises where the AIP cannot meet the requirement to submit the supporting documentation through the ROE system, the AIP must document why the requirement cannot be met and make other arrangements with the RO to submit (such as by facsimile, postal delivery, etc.) the supporting documentation no later than the applicable deadlines in Part 22, Section 2.

## 2202 AIP Alert Mechanisms

The ROE system automatically sends an email notification to an AIP-provided distribution email account when the RO makes electronic documents available for the AIP to retrieve. Additionally, when RMA releases a RO Determined Yield document to the AIP, the ROE system will post a record to the FTP (File Transfer Protocol) site to document this action. These alert mechanisms are provided as a courtesy to the AIP and any failure of these alert mechanisms does not exempt the AIP from the responsibility of timely retrieving documents and notifying the appropriate parties. The AIP should periodically perform a search on the SharePoint site to identify new document postings (such as requests for information) by the RO to ensure that the alert mechanisms did not fail to notify the AIP of available documents. RMA will also provide daily releases of decisions for submitted RO Determined Yield Requests as part of the ICE (Insurance Control Element) that should be monitored by the AIP. RMA will not extend deadlines due to an alert mechanism failure (such as a request for information is not retrieved timely due to an alert mechanism failure, therefore the required information is not submitted by the applicable deadlines and the request is incomplete).

## 2203 Separate Submission for WA

If a policyholder submits a RO Determined Yield Request and a WA request, AIPs will need to transmit these requests separately using the method provided for each request type. AIPs should note on the documentation for each request that both request types have been submitted for the policyholder.

## 2204-2210 (Reserved)

## 2211 Category B Crops

### A. RO Determined Yield Request Requirements

(1) A completed RO Determined Yield Request must include:

(a) a RO Determined Yield Request form (see DSSH for form requirements):

(b) the legal description of the land (in areas where legal descriptions are available);

(c) the FSA Farm/Tract/Field Number, if available;

(d) for units in which RO Determined Yields are requested:

(i) all individual unit APH databases for the current crop year or prior crop year if the current crop year is not available; or

(ii) a completed and signed production report for the most recent APH crop year in the APH database for each unit (by BU or OU) and by TMA (when applicable) on which the crop was grown;

(e) verifiable records of actual yields, if required by the RO;

(f) FSA aerial photograph or an acceptable GIS/GPS map, or other legible map issued by a state or federal agency delineating field boundaries, if required by the RO. Identify the fields where the insured intends to plant the crop, or where the crop is planted;

(g) for MYs only, the MY Summary APH databases and at least the four most recent APH crop years of continuous production reports. Any adjustments and/or exclusions applied to the yields contained within the MY summary APH database cannot be transferred. Yields must be identified with the "F" yield descriptor; and

(h) other information requested by the RO.

(2) A completed RO Determined Yield Request must be signed by the insured and submitted by the AIP to the RO no later than 20 calendar days (30 calendar days for MYs) after the PRD.

### B. RO Responsibilities

The RO must:

(1) document the date the RO (use this documentation to verify timeliness of issuance of RO Determined Yields):

**2211 Category B Crops (Continued)**

**B. RO Responsibilities (Continued)**

(a) received the RO Determined Yield Request; and

(b) sent the RO Determined Yield(s) to the AIP electronically through the ROE system (send the RO Determined Yield to the AIP within 15 business days after receipt of a complete RO Determined Yield Request);

(2) notify the AIP verifier if production records are needed to substantiate yields reported on the production report; and

(3) review requests and determine the RO Determined Yield(s) in accordance with Part 17, Sections 6 and 7, and the CSH.

**C. Yield Guidelines**

(1) RO Determined Yields are:

(a) based on the management ability demonstrated by the actual yields submitted, when available; and

(b) limited to 65-100 percent of the applicable T-Yield, unless the request is for a MY.

(2) The RO will issue the percent of T-Yield in a letter, unless the request is for a MY. For some situations, the letter may provide the assigned RO Determined Yield rather than the percent of T-Yield.

(3) The AIP will multiply the percentage of T-Yield issued by the current T-Yield (or use the assigned RO Determined Yield) and apply the applicable yield descriptor to the annual yield and the applicable yield indicator to the APH database.

(a) Apply the same percentage when RMA updates T-Yields.

(b) The assigned yield descriptor, assigned yield indicator, and RO Determined Yield remain in an APH database until the percentage of the variable T-Yield for the crop exceeds the RO Determined Yield or until the assigned RO Determined Yield is no longer needed (i.e., the APH database has four years of actual yields).

**Example:** The RO Determined Yield is 70 percent of the applicable T-Yield used to establish a four year database. When the insured adds an actual yield in a subsequent year, the percent of the applicable variable T-Yield increases to 80 percent (one year of actual and three 80 percent variable T-Yields).

## A. RO Determined Yield Request Requirements

(1) A completed RO Determined Yield Request must include:

(a) the legal description of the land (in areas where legal descriptions are available);

(b) FSA Farm/Tract/Field number when available;

(c) a PAIR dated within last five years;

(d) a PAW;

(e) a complete updated APH database for the current crop year; and

(f) if applicable, any additional information documented by the inspector, which should be attached to the PAIR(s).

(2) Unless otherwise stated in Para. (3) below or the noted exception in Para.1840, a RO Determined Yield Request must be signed by the insured no later than 30 calendar days after the PRD and submitted by the AIP, with any applicable inspections, to the RO no later than 60 calendar days after the PRD.

(3) A RO Determined Yield request for alternate bearing and downward trending adjustments must be signed by the insured and submitted by the AIP, with any applicable inspections, to the RO no later than 60 calendar days after the PRD.

(4) For a timely submitted request, any additional information requested by the RO must be submitted by the AIP within 20 calendar days from the date of notification from the RO or by the date specified in the RO's request.

(5) If the request and required supporting documentation are not received by the applicable date, they will be considered unacceptable. A RO Determined Yield will not be issued unless assigned yield provisions are applicable.

(6) If supporting documentation requested by the RO for a timely submitted request is not received by the RO by the applicable date, the RO will consider the RO Determined Yield Request to be unacceptable and assigned yields provisions will be applicable for carryover insureds.

For new insureds, the RO will determine that the production records are unacceptable and determine the yields according to Para. 1810, as applicable.

**B. RO Responsibilities**

The RO must:

(1) document the date the RO (use this documentation to verify timeliness of issuance of RO Determined Yields):

(a) received the RO Determined Yield Request; and

(b) sent the RO Determined Yield(s) to the AIP electronically through the ROE system (send the RO Determined Yield to the AIP within 15 business days after receipt of a complete RO Determined Yield Request);

(2) notify the AIP verifier if records are needed to substantiate yields reported on the production report; and

(3) review requests and determine the RO Determined Yield(s).

**C. RO Perennial UG**

ROs may issue UG as procedural exceptions for situations in their Region see CSH for additional UG criteria.

(1) The RO UG are issued to the AIPs operating in the applicable area serviced by the RO and are also found on the applicable RO web page at: http://www.rma.usda.gov/aboutrma/fields/rsos.html.

(2) Issue UG no later than the first applicable policy contract change date.

(3) A RO may issue UG in order to:

(a) provide authority to the AIP to determine approved APH yields in lieu of requesting RO Determined Yields; and/or

(b) waive PAIRs or extend the due date for PAIRs when excessive PAIRs are triggered by a regional issue.

(4) UG must specify:

(a) yield indicators and/or special case indicators for APH databases; or
(b) whether YA may be applied by the AIP.

## A. RO Determined Yield Request Requirements

A RO Determined Yield Request for Florida Citrus must include:

(1) the PAW, in addition to the block map (color satellite imagery, if available);
(2) the acreage report;
(3) a current PAIR;
(4) color photos representative of the condition of the grove or sub-grove(s);
(5) if not already documented on the PAIR, a narrative providing details addressing the:

   (a) health or condition of trees in the grove or sub-grove(s);

   (b) causes (insured or uninsured) and estimated dates of the tree canopy damage or change in cultural practice; and

   (c) expected production of the grove (more specific than indicating that production will exceed the 100 boxes threshold for acreage exclusion); and

(6) any additional supporting documentation (such as letters from agricultural experts, lab reports, etc.) that may be useful in aiding the RO in determining the appropriate amount of insurance on which the premium and any indemnity will be based.

   Include prior year Acreage Report if request is for a policy where additional damage has occurred since the last liability and/or acreage adjustment.

**Exception:** For Florida Citrus Fruit a RO Determined Yield Request will still be accepted when the request results in a lower dollar amount of insurance.

## B. RO Responsibilities

The RO must:

(1) document the date the RO (use this documentation to verify timeliness of issuance of RO Determined Yields):

   (a) received the RO Determined Yield Request; and

   (b) sent the RO Determined Yield(s) to the AIP electronically through the ROE system (send the RO Determined Yield to the AIP within 15 business days after receipt of a complete RO Determine Yield Request);

(2) notify the AIP verifier if records are needed to substantiate yields reported on the production report; and

(3) review requests and determine the RO Determined Yield(s).

**A. RO Determined Yield Request Requirements**

(1) A completed RO Determined Yield Request must include all of the following:

(a) a PAW;

(b) revenue report(s);

(c) SRH database(s);

(d) acreage report;

(e) a current PAIR;

(f) color photos representative of the condition of the orchards/sub-orchards or grove/sub-grove(s);

(g) if not already documented on the PAIR, a narrative providing details addressing:

(i) the health or condition of trees in the orchards/sub-orchards or grove/sub-grove(s); and

(ii) the causes of damage (insured or uninsured) and estimated dates of the tree canopy damage or change in cultural practice;

(h) the expected production of the orchard/grove; and

(i) any additional supporting documentation.

**Note:** The RO will utilize any additional supporting documentation (e.g., letters from agricultural experts, lab reports, etc.) that may be useful in determining the appropriate amount of insurance on which the premium and any indemnity will be based.

(2) Unless otherwise stated in Para. (3) below, a RO Determined Yield request must be signed by the insured and submitted by the AIP, with any applicable inspections, to the RO no later than 45 calendar days after the ARD.

(3) When the AIP submits a written request to extend a RO Determined Yield deadline no later than 45 calendar days after the ARD, the request may be extended when:

(a) the request requires a PAIR and the PAIR deadline was extended by the RO, see Para. 2152;

(b) the request is based on a situation that requires a lower approved average revenue per acre; or

(c) an insured notifies the AIP of a change in practice.

**A. RO Determined Yield Request Requirements (Continued)**

When a RO Determined Yield Request deadline is extended, the RO Determined Yield Request must be signed by the insured and submitted by the AIP to the RO no later than 60 calendar days after the ARD.

(4) For a timely submitted request, any additional information requested by the RO must be submitted by the AIP within 20 calendar days from the date of notification from the RO or by the date specified in the RO's request.

(5) If the request and required supporting documentation are not received by the applicable date, they will be considered unacceptable. A RO Determined Yield will not be issued.

**Exception:** A RO Determined Yield Request will be accepted at any time when the request is based on a situation that requires a reduced approved average revenue per acre for the current crop year.

**B. RO Responsibilities**

The RO must:

(1) document the date the RO (use this documentation to verify timeliness of issuance of RO Determined Yields):

(a) received the RO Determined Yield Request; and

(b) sent the RO Determined Yield(s) to the AIP electronically through the ROE system (send the RO Determined Yield to the AIP within 15 business days after receipt of a complete RO Determined Yield Request);

(2) notify the AIP verifier if records are needed to substantiate yields/revenue reported on the revenue report; and

(3) review requests and determine the RO Determined Yield(s).

**2215-3000 (Reserved)**

**Reserved**

**Reserved (continued)**

**Reserved**

**Reserved (continued)**

**Reserved**

**Reserved (continued)**

**Reserved**

**Reserved (continued)**

**Reserved**

**Reserved (continued)**

**Reserved**

**Reserved (continued)**

**Reserved**

**Reserved (continued)**

**Reserved**

**Reserved (continued)**

## A. Endorsements and Options Chart

The following chart provides information about endorsements and options.

| Crop Code | Crop Name | Endorsement or Option Code | Endorsement or Option Name | Pilot Crop or Pilot Option | *Continuous | Elected by Date | Elected By | CAT Coverage | Loss By | Source |
|---|---|---|---|---|---|---|---|---|---|---|
| 0054 | Apples | AF | Fresh Fruit Quality Adjustment Option | No | Continuous | SCD | Acre | No | Unit | CP |
| | Multiple Crops | BU | Basic Unit Discount | Varies by Crop | Continuous | ARD | Unit | Yes | Unit | BP |
| 0208 | Grapefruit Trees | CE | Coverage Enhancement Option | No | Continuous | SCD | Crop/County | No | Unit | BP/AD |
| 0207 | Orange Trees | CE | Coverage Enhancement Option | No | Continuous | SCD | Crop/County | No | Unit | BP/AD |
| 0193 | Tangerine Trees | CE | Coverage Enhancement Option | No | Continuous | SCD | Crop/County | No | Unit | BP/AD |
| 0210 | Lime Trees | CE | Coverage Enhancement Option | No | Continuous | SCD | Crop/County | No | Unit | BP/AD |
| 0211 | All Other Citrus | CV | Comprehensive Tree Value | Yes | Continuous | SCD | Crop/County | No | Unit | CP |
| 0212 | Avocado Trees | CV | Comprehensive Tree Value | Yes | Continuous | SCD | Crop/County | No | Unit | CP |
| 0266 | Coffee Trees | CV | Comprehensive Tree Value | Yes | Continuous | SCD | Crop/County | No | Unit | CP |
| 0208 | Grapefruit Trees | CV | Comprehensive Tree Value | Yes | Continuous | SCD | Crop/County | No | Unit | CP |
| 0207 | Orange Trees | CV | Comprehensive Tree Value | Yes | Continuous | SCD | Crop/County | No | Unit | CP |

* "Continuous" refers to Continuous once the endorsement/option is elected. However, if any policy is transferred to a different AIP, a new endorsement or option must be submitted to the new AIP.

## A. Endorsements and Options Chart (continued)

| Crop Code | Crop Name | Endorsement or Option Code | Endorsement or Option Name | Pilot Crop or Pilot Option | *Continuous | Elected by Date | Elected By | CAT Coverage | Loss By | Source |
|---|---|---|---|---|---|---|---|---|---|---|
| 0267 | Papaya Trees | CV | Comprehensive Tree Value | Yes | Continuous | SCD | Crop/County | No | Unit | CP |
| 0193 | Tangerine Trees | CV | Comprehensive Tree Value | Yes | Continuous | SCD | Crop/County | No | Unit | CP |
| 0084 | Potatoes | CH | Certified Seed High | No | Continuous | SCD | Acre | No | Acre | Endorsement |
| 0084 | Potatoes | CL | Certified Seed Low | No | Continuous | SCD | Acre | No | Acre | Endorsement |
| 0084 | Potatoes | QA | Quality Option #1 | No | Continuous | SCD | Crop/County | No | Unit | Endorsement |
| 0084 | Potatoes | QB | Quality Option #2 | No | Continuous | SCD | Crop/County | No | Unit | Endorsement |
| 0084 | Potatoes | QC | Quality#2/ Fresh | No | Continuous | SCD | Crop/County | No | Unit | Endorsement |
| 0084 | Potatoes | QD | Quality#2/ Processing | No | Continuous | SCD | Crop/County | No | Unit | Endorsement |
| 0084 | Potatoes | ST | Storage | No | Continuous | SCD | Crop/County | No | Unit | Endorsement |
| 0015 | Canola | CR | 2 Year Crop Rotation | No | Continuous | ARD | Acre | Yes | Unit | CP/AD |
| | Multiple Crops | EU | Enterprise Unit Discount | No | Continuous | SCD | Crop/County | No | Unit | BP/AD |
| 0226 | All Other Grapefruit | FR | With Frost Protection | No | Yearly | ARD | Acre | Yes | Unit | AD |
| 0054 | Apples | FR | With Frost Protection | No | Yearly | ARD | Acre | Yes | Unit | AD |
| 0224 | Early & Midseason Oranges | FR | With Frost Protection | No | Yearly | ARD | Acre | Yes | Unit | AD |
| 0201 | Grapefruit | FR | With Frost Protection | No | Yearly | ARD | Acre | Yes | Unit | AD |
| 0225 | Late Oranges | FR | With Frost Protection | No | Yearly | ARD | Acre | Yes | Unit | AD |

* "Continuous" refers to Continuous once the endorsement/option is elected. However, if any policy is transferred to a different AIP, a new endorsement or option must be submitted to the new AIP.

## A. Endorsements and Options Chart (continued)

| Crop Code | Crop Name | Endorsement or Option Code | Endorsement or Option Name | Pilot Crop or Pilot Option | *Continuous | Elected by Date | Elected By | CAT Coverage | Loss By | Source |
|---|---|---|---|---|---|---|---|---|---|---|
| 0202 | Lemons | FR | With Frost Protection | No | Yearly | ARD | Acre | Yes | Unit | AD |
| 0309 | Mandarins/Tangerines | FR | With Frost Protection | No | Yearly | ARD | Acre | Yes | Unit | AD |
| 0207 | Orange Trees | FR | With Frost Protection | No | Yearly | ARD | Acre | Yes | Unit | AD |
| 0215 | Navel Oranges | FR | With Frost Protection | No | Yearly | ARD | Acre | Yes | Unit | AD |
| 0227 | Oranges | FR | With Frost Protection | No | Yearly | ARD | Acre | Yes | Unit | AD |
| 0203 | Tangelos | FR | With Frost Protection | No | Yearly | ARD | Acre | Yes | Unit | AD |
| 0193 | Tangerine Trees | FR | With Frost Protection | No | Yearly | ARD | Acre | Yes | Unit | AD |
| 0238 | Rio Red & Star Ruby | FR | With Frost Protection | No | Yearly | ARD | Acre | Yes | Unit | AD |
| 0210 | Lime Trees | FR | With Frost Protection | No | Yearly | ARD | Acre | Yes | Unit | AD |
| 0208 | Grapefruit Trees | FR | With Frost Protection | No | Yearly | ARD | Acre | Yes | Unit | AD |
| 0228 | Ruby Red Grapefruit | FR | With Frost Protection | No | Yearly | ARD | Acre | Yes | Unit | AD |
| 0217 | Valencia Oranges | FR | With Frost Protection | No | Yearly | ARD | Acre | Yes | Unit | AD |
| | Multiple Crops | HF | Hail & Fire Exclusion | No | Both | Other | Crop/County | No | Unit | BP/ CIH/DSSH |
| | Multiple Crops | HR | High-Risk Land Exclusion | No | Continuous | SCD | Acre | No | Unit | BP/AD |

* "Continuous" refers to Continuous once the endorsement/option is elected. However, if any policy is transferred to a different AIP, a new endorsement or option must be submitted to the new AIP.

## A. Endorsements and Options Chart (continued)

| Crop Code | Crop Name | Endorsement or Option Code | Endorsement or Option Name | Pilot Crop or Pilot Option | *Continuous | Elected by Date | Elected By | CAT Coverage | Loss By | Source |
|---|---|---|---|---|---|---|---|---|---|---|
| 0062 | Hybrid Corn Seed | HS | Hybrid Seed Price Endorsement | No | Continuous | SCD | Unit | No | Unit | Endorsement |
| 0091 | Barley | ME | Malting Barley Endorsement | Yes | Continuous | SCD | Crop/County | No[5] | Unit | Endorsement |
| 0013 | Onions | NS | Stage Removal | Yes | Continuous | SCD | Crop/County | No | Unit | Endorsement |
| 0039 | Sugar Beets | NS | Stage Removal | Yes | Continuous | SCD | Crop/County | No | Unit | Endorsement |
| 0211 | All Other Citrus Trees | OW | Olo Base Policy | Yes | Continuous | SCD | Unit | No | Unit | CP/AD |
| 0207 | Orange Trees | OW | Olo Base Policy | Yes | Continuous | SCD | Unit | No | Unit | CP/AD |
| 0211 | All Other Citrus Trees | OX, | Olo Ctv Endorsement | Yes | Continuous | SCD | Unit | No | Unit | CP/AD |
| 0212 | Avocado Trees | OX | Olo Ctv Endorsement | Yes | Continuous | SCD | Unit | No | Unit | CP/AD |
| 0266 | Coffee Tree | OX | Olo Ctv Endorsement | Yes | Continuous | SCD | Unit | No | Unit | CP/AD |
| 0208 | Grapefruit Trees | OX | Olo Ctv Endorsement | Yes | Continuous | SCD | Unit | No | Unit | CP/AD |
| 0207 | Orange Trees | OX | Olo Ctv Endorsement | Yes | Continuous | SCD | Unit | No | Unit | CP/AD |
| 0266 | Coffee Trees | OW | Olo Base Policy | Yes | Continuous | SCD | Unit | No | Unit | CP/AD |

* "Continuous" refers to Continuous once the endorsement/option is elected. However, if any policy is transferred to a different AIP, a new endorsement or option must be submitted to the new AIP.

[5] Additional coverage must be elected on the underlying Small Grains Crop Provision policy to be eligible for this Endorsement.

## A. Endorsements and Options Chart (continued)

| Crop Code | Crop Name | Endorsement or Option Code | Endorsement or Option Name | Pilot Crop or Pilot Option | *Continuous | Elected by Date | Elected By | CAT Coverage | Loss By | Source |
|---|---|---|---|---|---|---|---|---|---|---|
| 0212 | Avocado Trees | OW | Olo Base Policy | Yes | Continuous | SCD | Unit | No | Unit | CP/AD |
| 0213 | Carambola Trees | OW | Olo Base Policy | Yes | Continuous | SCD | Unit | No | Unit | CP/AD |
| 0208 | Grapefruit Trees | OW | Olo Base Policy | Yes | Continuous | SCD | Unit | No | Unit | CP/AD |
| 0209 | Lemon Trees | OW | Olo Base Policy | Yes | Continuous | SCD | Unit | No | Unit | CP/AD |
| 0210 | Lime Trees | OW | Olo Base Policy | Yes | Continuous | SCD | Unit | No | Unit | CP/AD |
| 0214 | Mango Trees | OW | Olo Base Policy | Yes | Continuous | SCD | Unit | No | Unit | CP/AD |
| 0193 | Tangerine Trees | OW | Olo Base Policy | Yes | Continuous | SCD | Unit | No | Unit | CP/AD |
| 0073 | Nursery (FG&C) | PE | Peak Endorsement | No | Yearly | OTHER | Unit | No | Unit | Endorsements |
| | Authorized By Actuarial Documents | PF | Prevented Planting +5% | No | Continuous | SCD | Crop/County | No | Acre | BP/AD |
| 0073 | Nursery (FG&C) | PO | Price Endorsement Option | Yes | Yearly | SCD | Plant | No | Unit | Endorsements |

* "Continuous" refers to Continuous once the endorsement/option is elected. However, if any policy is transferred to a different AIP, a new endorsement or option must be submitted to the new AIP.

## A. Endorsements and Options Chart (continued)

| Crop Code | Crop Name | Endorsement or Option Code | Endorsement or Option Name | Pilot Crop or Pilot Option | **Continuous | Elected by Date | Elected By | CAT Coverage | Loss By | Source |
|---|---|---|---|---|---|---|---|---|---|---|
| 0073 | Nursery (FGg&C) | RH | Rehabilitation Endorsement | No | Yearly | SCD | Crop/County | No | Unit | Endorsements |
| 0089 | Pears | PQ | Pear Quality Adjustment | No | Continuous | SCD | Crop/County | No | Unit | CP/AD |
| 0084 | Potatoes | PR | Processing Quality | No | Continuous | SCD | Unit | No | Unit | Endorsements |
| 0086 | Fresh Market Tomatoes | RE | Replant Exclusion | No | Yearly | SCD | Crop/County | Yes | Acre | SP-Pennsylvania |
| 0086 | Fresh Market Tomatoes | VA | Minimum Value Option | No | Continuous | SCD | Crop/County | No | Acre | CP/AD |
| | North Dakota Only: Barley, Canola, Corn, Dry Beans, Dry Peas, Flax, Grain Sorghum, Millet, Mustard, Oats, Rye, Safflower, Soybeans, Sunflowers, Wheat | PY | Personal T-Yield | Yes | Continuous | PRD | Crop/County | No | Unit | Pilot Option Approved by Board, procedure via PM Bulletin 06-028 |
| 0083 | Peppers | VA | Minimum Value Option I | No | Continuous | SCD | Crop/County | No | Acre | CP/AD |

* "Continuous" refers to Continuous once the endorsement/option is elected. However, if any policy is transferred to a different AIP, a new endorsement or option must be submitted to the new AIP.

## A. Endorsements and Options Chart (continued)

| Crop Code | Crop Name | Endorsement or Option Code | Endorsement or Option Name | Pilot Crop or Pilot Option | **Continuous | Elected by Date | Elected By | CAT Coverage | Loss By | Source |
|---|---|---|---|---|---|---|---|---|---|---|
| 0083 | Peppers | VB | Minimum Value Option II | No | Continuous | SCD | Crop/County | No | Acre | CP/AD |
| 0044 | Fresh Market Sweet Corn | VO | Minimum Value Option | No | Continuous | SCD | Crop/County | No | Acre | CP/AD |
| 0086 | Fresh Market Tomatoes | VO | Minimum Value Option | No | Continuous | SCD | Crop/County | No | Acre | CP/AD |
| 0208 | Grapefruit Trees | WC | Without Weed Control | No | Yearly | ARD | Acre | Yes | Acre | CP/AD |
| 0207 | Orange Trees | WC | Without Weed Control | No | Yearly | ARD | Acre | Yes | Acre | CP/AD |
| 0193 | Tangerine Trees | WC | Without Weed Control | No | Yearly | ARD | Acre | Yes | Acre | CP/AD |
| 0091 | Barley | WO | Winter Coverage | No | Continuous | SCD | Unit | No | Unit | Endorsement / CP |
| 0074 | Mint | WO | Winter Coverage | No | Continuous | SCD | Crop/County | No | Acre | CP |
| 0067 | Dry Peas | WO | Winter Coverage | No | Continuous | SCD | Crop/County | No | Acre | CP |

* "Continuous" refers to continuous once the endorsement/option is elected. However, if any policy is transferred to a different AIP, a new endorsement or option must be submitted to the new AIP.

## A. Endorsements and Options Chart (continued)

| Crop Code | Crop Name | Endorsement or Option Code | Endorsement or Option Name | Pilot Crop or Pilot Option | **Continuous | Elected by Date | Elected By | CAT Coverage | Loss By | Source |
|---|---|---|---|---|---|---|---|---|---|---|
| 0011 | Wheat | WO | Winter Coverage | No | Continuous | SCD | Unit | No | Unit | Endorsement/ CP |
| 0081 | Soybeans | CP | Contract Price | No | Continuous | ARD | Crop/County | Yes | Unit | SP |
| 0091 | Barley | CP | Contract Price | Yes | Continuous | ARD | Crop/County | Yes | Unit | SP |
| | As authorized by Actuarial Documents | CP | Contract Price Addendum | No | Continuous | SCD | Crop/County | Yes | Unit | CPA/SP |
| 0052 | Table Grapes | PC | Protective Cover | No | Continuous | ARD | Acre | Yes | Unit | SP |
| | As authorized by Actuarial Documents | SCO | Supplemental Coverage Option Endorsement | No | Continuous | SCD | Crop/County/ FSA FN | Yes | County | Endorsement |
| | As authorized by Actuarial Documents | YA | Yield Adjustment 60% | Varies By Crop | Continuous | PRD | Crop/County | Yes | Unit | BP |
| | As authorized by Actuarial Documents | YE | Yield Exclusion | No | Continuous | SCD | Crop/County | Yes | Unit | BP |
| | As authorized by Actuarial Documents | YC | Yield Cup | No | Continuous | SCD | Crop/County | No | Unit | Procedure in Part 15, Sec. 5 |

* "Continuous" refers to continuous once the endorsement/option is elected. However, if any policy is transferred to a different AIP, a new endorsement or option must be submitted to the new AIP.

## B. Wheat or Barley and Dry Pea Winter Coverage Endorsement Flow Chart

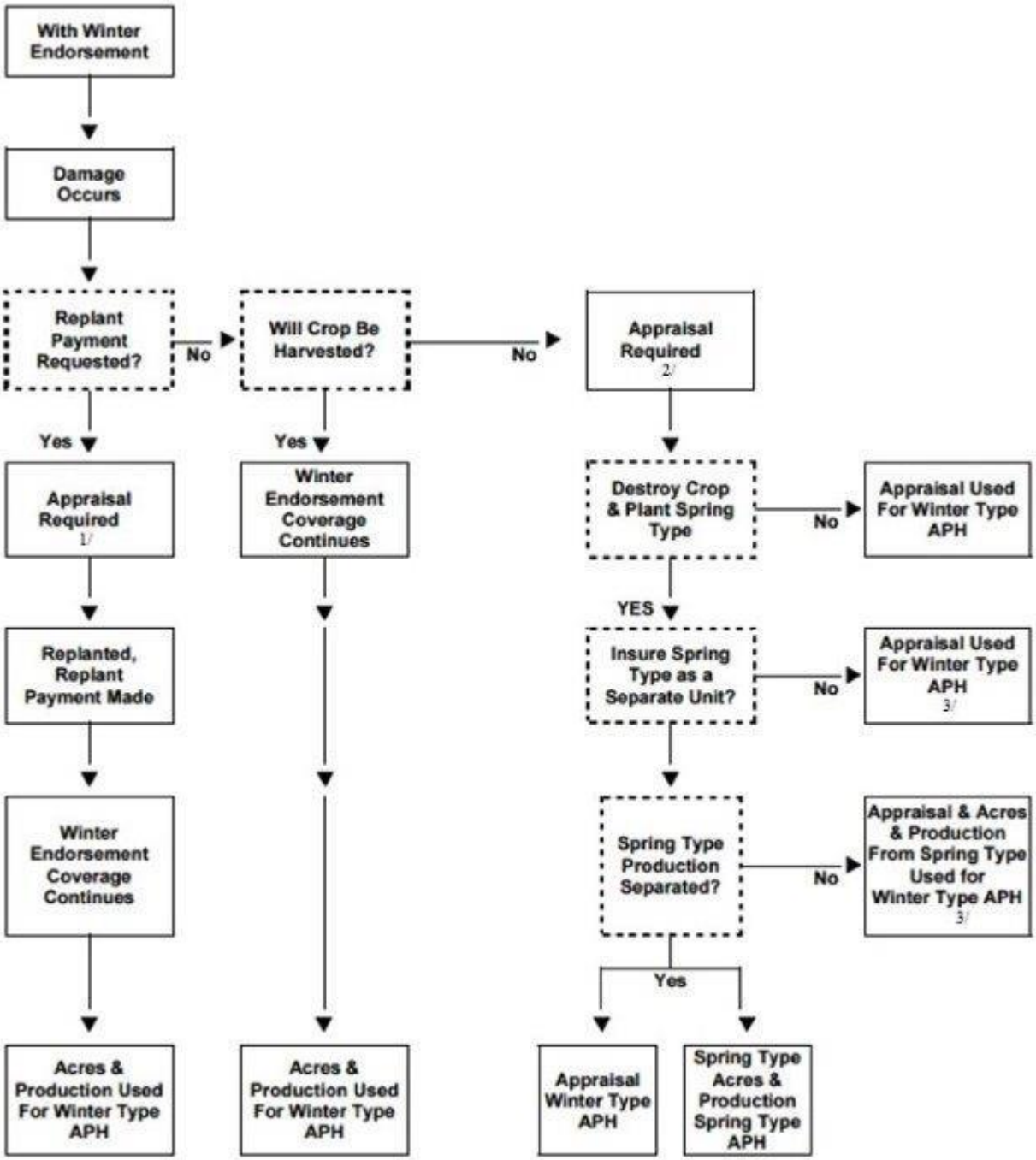


1/ Must qualify for replant payment.
2/ Appraisal for potential production used for Winter Type APH.
3/ If Winter Type and Spring Type production commingled, also use acres and production for Spring Type for Winter Type APH.

## C. SCO Endorsement Calculation Examples

Producer A farms 100 acres in county X with an approved yield of 154.6 bushels per acre and has a 100 percent share in those acres. The actuarial documents in county X show that the expected area yield is 145.0 bushels per acre, the projected price is $4.00, and the expected area revenue is $580.00. From the actuarial documents in county X, Producer A elects the 70 percent coverage level for the underlying policy, which results in a liability for the underlying policy of $43,288 based on the projected price. The insured elects a coverage percentage of 100 percent for SCO Endorsement.

At the end of the insurance period, for county X, FCIC releases a harvest price of $4.30, a final area yield for county X of 110.2 bushels, and a final area revenue for county X of $473.86. For the revenue protection example only, the liability for the underlying policy increases to $46,535.

### A. SCO Endorsement Calculations Example for Revenue Protection

The example below is the calculations of the supplemental protection, payment factor, and the indemnity for revenue protection with an underlying policy and a revenue SCO Endorsement:

(1) Supplemental protection:

**Step 1:** Calculate the supplemental coverage range which is area loss trigger minus coverage level of the underlying policy.

**Example:** County loss trigger = 86%
Insured underlying policy coverage level = 70%
Supplemental coverage range = (86% - 70% = 16%)

**Step 2:** Calculate the expected crop value by dividing the liability of the underlying policy by the coverage level of the underlying policy.

**Example:** Underlying policy unit liabilities = $46,535
Underlying policy coverage level = 70%
Expected crop value ($46,535 / 70%) = $66,479

**Step 3:** Calculate the supplemental protection by multiplying the supplemental coverage range by the expected crop value times coverage percentage.

**Example:** Supplemental coverage range = 16%
Unit 0001-0000: 16% x $66,479 x 1.00 = $10,637
Supplemental protection = $10,637

(2) Calculate the indemnity payment factor by:

**Step 1:** multiplying the expected area yield by the higher of the projected price or harvest price;

**Example:** (145.0 bushels * $4.30) = $623.50

## C. SCO Endorsement Calculation Examples (continued)

### A. SCO Endorsement Calculations Example for Revenue Protection (continued)

**Step 2:** dividing the final area revenue by the result of step 1;

**Example:** ($473.86 / $623.50) = 0.76

**Step 3:** subtracting the percent from step 2 from area loss trigger; and

**Example:** (0.86 – 0.76) = 0.10

**Step 4** dividing the result of step 3 by the supplemental coverage range.

**Example:** (0.10 / 0.16) = 0.625
Payment factor = 0.625

(0.86 – (473.86 / (145.0 bushels * $4.30))) / 0.16 = 0.625

(3) Calculate the indemnity by taking the supplemental protection times the payment factor.

**Example:** ($10,637* 0.625) = $6,648

### B. SCO Endorsement Calculations Example for Revenue Protection with HPE

The example below is the calculations of the supplemental protection, payment factor, and the indemnity for revenue protection with the HPE for an underlying policy and a revenue SCO Endorsement with the HPE:

(1) Supplemental protection:

**Step 1**: Calculate the supplemental coverage range which is area loss trigger minus coverage level of the underlying policy.

**Example:** County loss trigger = 86%
Insured underlying policy coverage level = 70%
Supplemental coverage range = (86% - 70% = 16%)

**Step 2:** Calculate the expected crop value by dividing the liability of the underlying policy by the coverage level of the underlying policy.

**Example:** Underlying policy unit liabilities = $43,288
Underlying policy coverage level = 70%
Expected crop value ($43,288 / 70%) = $61,840

**Step 3:** Calculate the supplemental protection by multiplying the supplemental coverage range by the expected crop value times coverage percentage.

## C. SCO Endorsement Calculation Examples (continued)

### B. SCO Endorsement Calculations Example for Revenue Protection with HPE (continued)

**Example:** Supplemental coverage range = 16%
Unit 0001-0000: 16% x $61,840 x 1.00 = $9,894
Supplemental protection = $9,894

(2) Calculate the indemnity payment factor by:

**Step 1:** dividing the final area revenue by the expected area revenue;

**Example:** ($473.86 ÷ $580.00) = 0.817

**Step 2:** subtracting the percent from step 1 from area loss trigger; and

**Example:** (0.86 – 0.817) = 0.043

**Step 3** dividing the result of step 2 by the supplemental coverage range.

**Example:** (0.043 / 0.16) = 0.269
Payment factor = 0.269

(0.86 – ($473.86 / $580.00)) / 0.16 = 0.269

(3) Calculate the indemnity by taking the supplemental protection times the payment factor.

**Example:** ($9,894* 0.269) = $2,661

The example below is the calculations of the supplemental protection, payment factor, and the indemnity for policies other than revenue protection for an underlying policy and a SCO Endorsement for other than revenue protection:

(1) Supplemental protection:

**Step 1:** Calculate the supplemental coverage range which is area loss trigger minus coverage level of the underlying policy.

**Example:** County loss trigger = 86%
Insured underlying policy coverage level = 70%
Supplemental coverage range = (86% - 70% = 16%)

**Step 2:** Calculate the expected crop value by dividing the liability of the underlying policy by the coverage level of the underlying policy.

## C. SCO Endorsement Calculation Examples (continued)

### C. SCO Endorsement Calculations Example for Policies Other Than Revenue Protection

**Example:** Underlying policy unit liabilities = $43,288
Underlying policy coverage level = 70%
Expected crop value ($43,288/ 70%) = $61,840

**Step 3:** Calculate the supplemental protection by multiplying the supplemental coverage range by the expected crop value times coverage percentage.

**Example:** Supplemental coverage range = 16%
Unit 0001-0000: 16% x $61,840 x 1.00 = $9,894
Supplemental protection: $9,894

(2) Calculate the indemnity payment factor by:

**Step 1:** dividing the final area yield by the expected area yield;

**Example:** (110.2 bushels / 145.0 bushels) = 0.76

**Step 2:** subtracting the percent from step 1 from area loss trigger; and

**Example:** (0.86 – 0.76) = 0.10

**Step 3** dividing the result of step 2 by the supplemental coverage range.

**Example:** (0.10 / 0.16) = 0.625
Payment factor = 0.625

(0.86 – (110.2 bushels / 145.0 bushels)) / 0.16 = 0.625

(3) Calculate the indemnity by taking the supplemental protection times the payment factor.

**Example:** (9,894 * 0.625) = $6,184

## A. Examples of Unit Numbering when Units Change

(1) Change in Elected Unit Structure

In 2018, insured elected OUs. In 2019, insured changed to CAT level coverage and can only have BUs. Although the insured's elected unit structure has changed, APH databases at the OU level must be maintained and transmitted to RMA.

If the insured reports production on a BU level or production is commingled between OUs, AIPs must prorate the production to the existing APH databases with planted acreage.

**Crop Year 2018 Additional Coverage → Crop Year 2019 CAT Coverage**

| SHARE HOLDER(S) | UNIT NUMBER | UNIT STRUCTURE |
|---|---|---|
| Landlord A/ Tenant 1 | 0001-0001 | OU |
| Landlord A/ Tenant 1 | 0001-0002 | OU |
| Landlord A/ Tenant 1 | 0001-0003 | OU |

| SHARE HOLDER(S) | UNIT NUMBER | UNIT STRUCTURE |
|---|---|---|
| Landlord A/ Tenant 1 | 0001-0001 | BU |
| Landlord A/ Tenant 1 | 0001-0002 | BU |
| Landlord A/ Tenant 1 | 0001-0003 | BU |

(2) Unit Division

In 2018, insured has one BU (0001-0000) consisting of 180 acres, share-rented from Landlord A. In 2019, Landlord A has sold 80 acres of the 180 acres to Landlord B. Insured continues to share-rent the same 180 acres, but now is share-renting 100 acres from Landlord A and share-renting 80 acres from Landlord B.

For 2019, BU 0001-0000 must be divided into 0001-0000BU and 0002-0000BU. See Part 10 Section 7 for instructions and procedures for dividing units.

**Crop Year 2018** → **Crop Year 2019**

| SHARE HOLDER(S) | ACRES | UNIT NUMBER | UNIT STRUCTURE |
|---|---|---|---|
| Landlord A/ Insured | 180 | 0001-0000 | BU |

| SHARE HOLDER(S) | ACRES | UNIT NUMBER | UNIT STRUCTURE |
|---|---|---|---|
| Landlord A/ Insured | 100 | 0001-0000 | BU |
| Landlord B/ Insured | 80 | 0002-0000 | BU |

## A. Examples of Unit Numbering when Units Change (Continued)

(3) Commingled Production between Two or More OUs

In 2018, the insured had five OUs. During processing of a claim for indemnity it was discovered that production was commingled between units 0001-0001OU and 0001-0003OU and also between 0001-0002OU and 0001-0004OU. The next crop year's APH would be processed with three OUs (with two of the OUs having 2 APH databases each).

**Crop Year 2018** → **Crop Year 2019**

| UNIT NUMBER | UNIT STRUCTURE |
|---|---|
| 0001-0001 | OU |
| 0001-0002 | OU |
| 0001-0003 | OU |
| 0001-0004 | OU |
| 0001-0005 | OU |

| UNIT NUMBER | UNIT STRUCTURE | RECORD NUMBER | REASON CODE |
|---|---|---|---|
| 0001-0001 | OU | 001 | C |
| 0001-0002 | OU | 001 | C |
| 0001-0001 | OU | 002 | C |
| 0001-0002 | OU | 002 | C |
| 0001-0005 | OU | | |

## B. Combining Units and APH Databases

**Example 1:** This example illustrates combining units and yield history due to a change in BU structure from two OU APH databases into a single BU APH database when both APH databases contain actual or assigned yields.

In this example, land that was previously share rented has been purchased and is being combined with unit 0002-0002OU, which is owned by the insured.

**Previous (Policy) Year's Databases (2018)**

| 2018 | UNIT 0002-0002OU (NI NFAC) | | SEC. 17 |
|---|---|---|---|
| YEAR | PROD | ACRES | YIELD |
| 2012 | | | |
| 2013 | | | T19 |
| 2014 | | | T19 |
| 2015 | 1200 | 60.0 | A20 |
| 2016 | | 0.0 | Z |
| 2017 | 880 | 40.0 | A22 |

| 2018 | UNIT 0001-0001OU (NI NFAC) | | SEC. 17 |
|---|---|---|---|
| YEAR | PROD | ACRES | YIELD |
| 2012 | | | |
| 2013 | | | |
| 2014 | | | T19 |
| 2015 | 2880 | 90.0 | A32 |
| 2016 | 1680 | 60.0 | A28 |
| 2017 | 1920 | 80.0 | A24 |

## B. Combining Units and APH Databases (Continued)

**Step 1** The insured provides the 2018 production report for the 2019 APH crop year: NI NFAC practice with 3000 bu. production, 100.0 actual acres and a 30-bu. average yield.

**Step 2** Actual acres and production are combined.

| YEAR | 4080 / 150.0 | |
|---|---|---|
| 2015 | (1200[Bu] + 2880[Bu]) ÷ (60.0[acres] + 90.0[acres]) | = **27** |
| | **1680 / 60.0** | |
| 2016 | (0[Bu] + 1680[Bu]) ÷ ( 0.0[acres] + 60.0[acres]) | = **28** |
| | **2800 / 120.0** | |
| 2017 | (880[Bu] + 1920[Bu]) ÷ (40.0[acres] + 80.0[acres]) | = **23** |

**Step 3** Since four years of actual records are available, T-Yields are not used in the resulting APH database.

**Step 4** Calculate approved APH yield.

**Current (Policy) Year's Database (2019)**

| | 2019 | UNIT 0002-0000BU (NI NFAC) | | SEC. 17 | |
|---|---|---|---|---|---|
| **STEP** | **YEAR** | **PROD** | **ACRES** | **YIELD** | |
| STEP 3 | | | | | |
| STEP 2 | 2015 | 4080 | 150.0 | A27 | |
| STEP 2 | 2016 | 1680 | 60.0 | A28 | |
| STEP 2 | 2017 | 2800 | 120.0 | A23 | |
| STEP 1 | 2018 | 3000 | 100.0 | A30 | **MOST RECENT APH CROP YEAR** |
| STEP 4 | | | TOTAL 108/4= | 27 | |

## B. Combining Units and APH Databases (Continued)

**Example 2:** This example illustrates establishing the current (policy) crop year APH database when two BUs are combined into a single BU due to a change in the BU structure. For the prior APH crop year, unit 0001-0001OU contained actual and assigned yields. Unit 0001-0002OU was added land the prior year and contained only T-Yields of 17 bu.

**Previous (Policy) Year's Databases (2018)**

| 2018 | UNIT 0001-0000BU (NI NFAC) | | SEC. 2 |
|---|---|---|---|
| YEAR | PROD | ACRES | YIELD |
| 2012 | | | |
| 2013 | 2200 | 55.0 | A40 |
| 2014 | | 0.0 | Z |
| 2015 | | 40.5 | P15 |
| 2016 | 2520 | 60.0 | A42 |
| 2017 | 1210 | 50.0 | A24 |

| 2018 | UNIT 0002-0000BU (NI NFAC) | | SEC. 2 |
|---|---|---|---|
| YEAR | PROD | ACRES | YIELD |
| 2012 | | | |
| 2013 | | | |
| 2014 | | | T17 |
| 2015 | | | T17 |
| 2016 | | | T17 |
| 2017 | | | T17 |

**Step 1** For the current (policy) crop year (2019), the insured reported 120 acres and 5760 bushels of production (from both locations) on a combined production report for the most recent APH crop year (2018). Acreage and productivity requirements stated in Part 17 Section 9 for added land were met in 2017, which allows the databases to be combined.

**Step 2** Since there is no actual acres or production from unit 0002-0000 BU to be combined with unit 0001-0000BU, no action is necessary for this step.

**Step 3** Since four years of actual/assigned yield are available, T-Yields are not used in the resulting APH database.

**Step 4** Calculate the approved APH yield.

## B. Combining Units and APH Databases (Continued)

### Current (Policy) Year's (2019) Combined Database

| | 2019 | UNIT 0001-0000BU (NI NFAC) | | SEC. 2 |
|---|---|---|---|---|
| **STEP** | **YEAR** | **PROD** | **ACRES** | **YIELD** |
| **STEP 2** | 2013 | 2200 | 55.0 | A40 |
| **STEP 2** | 2014 | | 0.0 | Z |
| **STEP 2** | 2015 | | 40.5 | P15 |
| **STEP 2** | 2016 | 2520 | 60.0 | A42 |
| **STEP 2** | 2017 | 1210 | 50.0 | A24 |
| **STEP 1** | **2018** | **5760** | **120.0** | **A48** |
| **STEP 4** | | | TOTAL | 169 |
| | | | APH | 169/5=34 |

**Example 3:** Maintaining previously established APH databases for the current (policy) crop year (2019) when three OUs are temporarily combined into a single BU. The BU for the previous (policy) crop year contained three OUs (0001-0001OU, 0001-0002OU and 0001-0003OU). Two OUs contained actual yields and one contained T-Yields.

### Previous (Policy) Year's APH Databases (2018)

| UNIT 0001-0001OU | | | |
|---|---|---|---|
| YEAR | PROD | ACRES | YIELD |
| 2014 | 17,170 | 85.0 | A202 |
| 2015 | 10,450 | 110.0 | A95 |
| 2016 | 16,200 | 90.0 | A180 |
| 2017 | 18,500 | 100.0 | A185 |
| AVERAGE: **166** | | | |

| UNIT 0001-0002OU | | | |
|---|---|---|---|
| YEAR | PROD | ACRES | YIELD |
| 2014 | | | L174 |
| 2015 | | | L174 |
| 2016 | 15,000 | 100.0 | A150 |
| 2017 | 41,000 | 200.0 | A205 |
| AVERAGE: **176** | | | |

| UNIT 0001-0003OU | | | |
|---|---|---|---|
| YEAR | PROD | ACRES | YIELD |
| 2014 | | | T150 |
| 2015 | | | T150 |
| 2016 | | | T150 |
| 2017 | | | T150 |
| AVERAGE: **150** | | | |

### Current (Policy) Year's APH Databases (2019)

| **STEP 1** UNIT 0001-0001BU | | | |
|---|---|---|---|
| YEAR | PROD | ACRES | YIELD |
| 2014 | 17,170 | 85.0 | A202 |
| 2015 | 10,450 | 110.0 | A95 |
| 2016 | 16,200 | 90.0 | A180 |
| 2017 | 18,500 | 100.0 | A185 |
| **STEP 2** 2018 | 21,450 | 110.0 | A195 |
| **STEP 3** AVERAGE: **171** | | | |

| **STEP 1** UNIT 0001-0002BU | | | |
|---|---|---|---|
| YEAR | PROD | ACRES | YIELD |
| 2014 | | | |
| 2015 | | | L174 |
| 2016 | 15,000 | 100.0 | A150 |
| 2017 | 41,000 | 200.0 | A205 |
| **STEP 2** 2018 | 24,000 | 150.0 | A160 |
| **STEP 3** AVERAGE: **172** | | | |

| **STEP 1** UNIT 0001-0003BU | | | |
|---|---|---|---|
| YEAR | PROD | ACRES | YIELD |
| 2014 | | | T150 |
| 2015 | | | T150 |
| 2016 | | | T150 |
| 2017 | | | T150 |
| **STEP 2** 2018 | | | Z |
| **STEP 3** AVERAGE: **150** | | | |

## B. Combining Units and APH Databases (Continued)

### Subsequent (Policy) Crop Year (2020)

For 2020 the previous APH crop year's production (2019) was not reported separately by APH database. APH database 0001-0002BU and APH database 0001-0003BU were planted and the production was commingled (50,000 bushels / 500 acres = 100 bu per acre). 200 acres were planted on APH database 0001-0002BU (200.0 X 100 = 20,000 bu.) and 300 acres planted on APH database 0001-0003BU (300.0 X 100 = 30,000 bu.). The APH databases are completed using the prorated actual production. No acres were planted on APH database 0001-0001BU and its APH database is updated using zero planted rules. The "PA" yield descriptor must be used to identify prorated actual yields for the 2019 APH crop year.

| UNIT 0001-0001BU | | | |
|---|---|---|---|
| YEAR | PROD | ACRES | YIELD |
| 2014 | 17,170 | 85.0 | A202 |
| 2015 | 10,450 | 110.0 | A95 |
| 2016 | 16,200 | 90.0 | A180 |
| 2017 | 18,500 | 100.0 | A185 |
| 2018 | 21,450 | 110.0 | A195 |
| 2019 | | 0.0 | Z |
| AVERAGE: 171 | | | |

| UNIT 0001-0002BU | | | |
|---|---|---|---|
| YEAR | PROD | ACRES | YIELD |
| 2014 | | | |
| 2015 | | | |
| 2016 | 15,000 | 100.0 | A150 |
| 2017 | 41,000 | 200.0 | A205 |
| 2018 | 24,000 | 150.0 | A160 |
| 2019 | 20,000 | 200.0 | PA100 |
| AVERAGE: 154 | | | |

| UNIT 0001-0003BU | | | |
|---|---|---|---|
| YEAR | PROD | ACRES | YIELD |
| 2014 | | | |
| 2015 | | | T150 |
| 2016 | | | T150 |
| 2017 | | | T150 |
| 2018 | | | Z |
| 2019 | 30,000 | 300.0 | PA100 |
| AVERAGE: 138 | | | |

**Example 4:** Using the same information as Example 3, maintaining previously established databases for the current (policy) crop year (2019) when OUs 0001-0001OU and 0001-0003OU are temporarily combined into an OU (0001-0001OU) and OU 0001-0002OU will be retained.

### Previous (Policy) Year's Databases (2018)

| UNIT 0001-0001OU | | | |
|---|---|---|---|
| YEAR | PROD | ACRES | YIELD |
| 2014 | 17,170 | 85.0 | A202 |
| 2015 | 10,450 | 110.0 | A95 |
| 2016 | 16,200 | 90.0 | A180 |
| 2017 | 18,500 | 100.0 | A185 |
| AVERAGE: 166 | | | |

| UNIT 0001-0002OU | | | |
|---|---|---|---|
| YEAR | PROD | ACRES | YIELD |
| 2014 | | | L174 |
| 2015 | | | L174 |
| 2016 | 15,000 | 100.0 | A150 |
| 2017 | 41,000 | 200.0 | A205 |
| AVERAGE: 176 | | | |

| UNIT 0001-0003OU | | | |
|---|---|---|---|
| YEAR | PROD | ACRES | YIELD |
| 2014 | | | T150 |
| 2015 | | | T150 |
| 2016 | | | T150 |
| 2017 | | | T150 |
| AVERAGE: 150 | | | |

## B. Combining Units and APH Databases (Continued)

### Current (Policy) Year's Databases (2019)

| STEP 1 UNIT 0001-0001 RECORD .1 | | | |
|---|---|---|---|
| YEAR | PROD | ACRES | YIELD |
| 2014 | 17,170 | 85.0 | A202 |
| 2015 | 10,450 | 110.0 | A95 |
| 2016 | 16,200 | 90.0 | A180 |
| 2017 | 18,500 | 100.0 | A185 |
| **STEP 2** 2018 | 21,450 | 110.0 | A195 |
| **STEP 3** | AVERAGE: **171** | | |

| STEP 1 UNIT 0001-0002 | | | |
|---|---|---|---|
| YEAR | PROD | ACRES | YIELD |
| 2014 | | | |
| 2015 | | | L174 |
| 2016 | 15,000 | 100.0 | A150 |
| 2017 | 41,000 | 200.0 | A205 |
| **STEP 2** 2018 | 24,000 | 150.0 | A160 |
| **STEP 3** | AVERAGE: **172** | | |

| STEP 1 UNIT 0001-0001 RECORD .3 | | | |
|---|---|---|---|
| YEAR | PROD | ACRES | YIELD |
| 2014 | | | T150 |
| 2015 | | | T150 |
| 2016 | | | T150 |
| 2017 | | | T150 |
| **STEP 2** 2018 | | 0.0 | Z |
| **STEP 3** | AVERAGE: **150** | | |

### Dividing the OUs in a Subsequent Crop Year (2020)

The following illustrates dividing the BU into three OUs in a subsequent crop year (2020). 2018 production was commingled between units 0001-0002OU and 0001-0003OU and prorated when calculating the 2019 approved yield. The appropriate records were updated with the acres and separated actual production for the most recent APH crop year to qualify for OUs (prorated production calculations are not acceptable records to qualify for OUs).

| UNIT 0001-0001 | | | |
|---|---|---|---|
| YEAR | PROD | ACRES | YIELD |
| 2013 | 17,170 | 85.0 | A202 |
| 2014 | 10,450 | 110.0 | A95 |
| 2015 | 16,200 | 90.0 | A180 |
| 2016 | 18,500 | 100.0 | A185 |
| 2017 | 21,450 | 110.0 | A195 |
| 2018 | | 0.0 | Z |
| 2019 | 21,120 | 110.0 | A192 |
| AVERAGE: **175** | | | |

| UNIT 0001-0002 | | | |
|---|---|---|---|
| YEAR | PROD | ACRES | YIELD |
| 2013 | | | |
| 2014 | | | |
| 2015 | 15,000 | 100.0 | A150 |
| 2016 | 41,000 | 200.0 | A205 |
| 2017 | 24,000 | 150.0 | A160 |
| 2018 | 20,000 | 200.0 | PA100 |
| 2019 | 25,500 | 150.0 | A170 |
| AVERAGE: **157** | | | |

| UNIT 0001-0003 | | | |
|---|---|---|---|
| YEAR | PROD | ACRES | YIELD |
| 2013 | | | |
| 2014 | | | |
| 2015 | | | T150 |
| 2016 | | | T150 |
| 2017 | | 0.0 | Z |
| 2018 | 30,000 | 300.0 | PA100 |
| 2019 | 8,000 | 50.0 | A160 |
| AVERAGE: **140** | | | |

## C. Dividing Units Examples

**Example 1:** A BU is divided into two OUs. The insured filed acceptable production reports for the current (policy) crop year (2019 APH crop year only) for units 0001-0001OU and 0001-0002OU. Insured does not recertify production or acres.

The same process will be used for insured that start providing separate production reports for acreage that could be separate OUs under additional coverage while still insured under CAT.

**Previous (Policy) Year (2018)**
**BU (Sec 1& 2)**

| **2018** | **UNIT 0001-0000(SF)** | | **SEC. 1 & 2** |
|---|---|---|---|
| YEAR | PROD | ACRES | YIELD |
| 2012 | 8,800 | 200.0 | A44 |
| 2013 | | 0.0 | Z |
| 2014 | | 100.0 | P37 |
| 2015 | 10,080 | 210.0 | A48 |
| 2016 | 8,000 | 200.0 | A40 |
| 2017 | 4,800 | 240.0 | A20 |

**Current (Policy) Year's OU (2019)**

| **2019** | **UNIT 0001-0001(SF)** | | **SEC. 1** | | **2019** | **UNIT 0001-0002 (SF)** | | **SEC. 2** |
|---|---|---|---|---|---|---|---|---|
| YEAR | PROD | ACRES | YIELD | STEP | YEAR | PROD | ACRES | YIELD |
| 2012 | 8,800 | 200.0 | DA44 | STEP 2 | 2012 | 8,800 | 200.0 | DA44 |
| 2013 | | 0.0 | Z | STEP 2 | 2013 | | 00 | Z |
| 2014 | | 100.0 | P37 | STEP 2 | 2014 | | 100.0 | P37 |
| 2015 | 10,080 | 210.0 | DA48 | STEP 2 | 2015 | 10,080 | 210.0 | DA48 |
| 2016 | 8,000 | 200.0 | DA40 | STEP 2 | 2016 | 8,000 | 200.0 | DA40 |
| 2017 | 4,800 | 240.0 | DA20 | STEP 2 | 2017 | 4,800 | 240.0 | DA20 |
| **2018** | **4,400** | **80.0** | **A55** | **STEP 1** | **2018** | | **0.0** | **Z** |
| | | TOTAL | 244/6=41 | STEP 4 | | | TOTAL | 189/5=38 |
| | | APH | 41 | | | | APH | 38 |

## C. Dividing Units Examples (Continued)

**Example 2:** 2019 APH crop year production reports are submitted for two OUs. The acreage was previously reported as one unit. Acreage previously reported was recertified for two OUs. The same process will be used for insureds that start providing separate production reports for acreage that could be separate OUs under additional coverage while still insured under CAT.

**Previous (Policy) Year (2018)**
**BU (Sec. 10 and 11)**

| **2018** | **UNIT 0001-0000BU** | | **(SF)** |
|---|---|---|---|
| YEAR | PROD | ACRES | YIELD |
| 2012 | 10,400 | 200.0 | A52 |
| 2013 | | 0.0 | Z |
| 2014 | | 100.0 | P36 |
| 2015 | 11,340 | 210.0 | A54 |
| 2016 | 8,000 | 200.0 | A40 |
| 2017 | 4,800 | 240.0 | A20 |
| | | TOTAL | 202/5=40 |
| | | APH | 40 |

**Current (Policy) Year (2019) OU**

| **2019** | **UNIT 0001-0002OU** | | **SF** | | **2019** | **UNIT 0001-0001OU** | | **SF** |
|---|---|---|---|---|---|---|---|---|
| YEAR | PROD | ACRES | YIELD | | YEAR | PROD | ACRES | YIELD |
| 2011 | | | | STEP 3 | | | | |
| 2012 | 5,920 | 120.0 | PA49 | STEP 2 | 2012 | 4480 | 80.0 | PA56 |
| 2013 | | 0.0 | Z | STEP 2 | 2013 | | 0.0 | Z |
| 2014 | | 100.0 | P36 | STEP 2 | 2014 | | 100.0 | P36 |
| 2015 | 5,840 | 110.0 | PA53 | STEP 2 | 2015 | 5500 | 100.0 | PA55 |
| 2016 | 5,120 | 140.0 | PA37 | STEP 2 | 2016 | 2880 | 60.0 | PA48 |
| 2017 | 600 | 100.0 | PA6 | STEP 2 | 2017 | 4200 | 140.0 | PA30 |
| **2018** | | **0.0** | **Z** | **STEP 1** | **2018** | **4400** | **80.0** | **A55** |
| | | TOTAL | 181/5=37 | STEP 4 | | | TOTAL | 274/6=46 |
| | | APH | 36 | | | | APH | 46 |

## C. Dividing Units Examples (Continued)

**Example 3:** The BU definition changed and the BUs increased from one unit to two units. The insured filed one policy unit production report according to the previous BU definition. The yield history is simply duplicated to the additional unit. However, separate production reports must be filed the subsequent crop year.

**Previous (Policy) Year (2018)**
**BU**

| 2018 | UNIT 0001-0000BU | | (NISP) |
|---|---|---|---|
| YEAR | PROD | ACRES | YIELD |
| 2013 | | | |
| 2014 | | 0.0 | N270 |
| 2015 | | 0.0 | N270 |
| 2016 | 20,000 | 50.0 | A400 |
| 2017 | 31,875 | 75.0 | A425 |
| | | TOTAL | 1365/4=341 |
| | | APH | 341 |

**Current (Policy) Year (2019)**

**BU**

| 2019 | UNIT 0001-0000BU | | (NISP) |
|---|---|---|---|
| YEAR | PROD | ACRES | YIELD |
| 2014 | | | |
| 2015 | | 0.0 | T300 |
| 2016 | 20,000 | 50.0 | DA400 |
| 2017 | 31,875 | 75.0 | DA425 |
| 2018 | 45,400 | 100.0 | DA454 |
| | | TOTAL | 1579/4=395 |
| | | APH | 395 |

**Current (Policy) Year (2019)**

**Production Report**

| 2019 | UNIT 0002-0000BU | | (NISP) |
|---|---|---|---|
| YEAR | PROD | ACRES | YIELD |
| 2014 | | | |
| 2015 | | | T300 |
| 2016 | 20,000 | 50.0 | DA400 |
| 2017 | 31,875 | 75.0 | DA425 |
| 2018 | 45,400 | 100.0 | DA454 |
| | | TOTAL | 1579/4=395 |
| | | APH | 395 |

## D. Additional Bean Procedure for Units and Yields by Types

(1) Definitions

(a) Beans - Dry beans and contract seed beans.

(b) Dry Beans - The crop defined by the United States Standards for Beans excluding contract seed beans. The insured may elect to insure dry bean acreage grown under contract with a seed company as commercial dry beans provided it is reported as the appropriate type (not contract seed) on the acreage report. The minimum quality standards stated in the seed contract will not apply.

(c) Contract Seed Beans - Dry beans grown under the terms of a seed bean processor contract for the purpose of producing dry beans or vegetable beans in a future crop year.

(d) Type - A category of beans identified as a type in the actuarial documents.

(2) Unit Division for Dry and Contract Seed Beans

(a) Acreage planted to dry beans and contract seed beans are separate BUs. For dry beans and contract seed beans a BU is all insurable acreage of dry beans or contract seed beans in the county in which the insured has:

(i) 100 percent share; or

(ii) Is owned by one entity and operated by another specific entity on a share basis.

(b) BUs determined in A above may be further divided into OUs by:

(i) Bean Type Shown on the actuarial documents (Dry Beans only).

(ii) Section, Section Equivalent, or FSA FN (Dry Beans or Contract Seed Beans if the contract specifies the number of acres under contract).

(iii) Irrigated and non-irrigated Practices (Dry Beans or Contract Seed Beans IF the contract specifies the number of acres under contract).

(iv) Written Unit Agreement (Dry Beans or Contract Seed Beans IF the contract specifies the number of acres under contract).

OUs are not available for contract seed beans grown under a seed bean processor contract that specifies only an amount of production.

**D. Additional Bean Procedure for Units and Yields by Type (Continued)**

(c) Refer to the following examples and Part 10 Section 1 and 2 for additional unit determination instructions. Part 10 Section 5 provides instructions for numbering BUs and OUs.

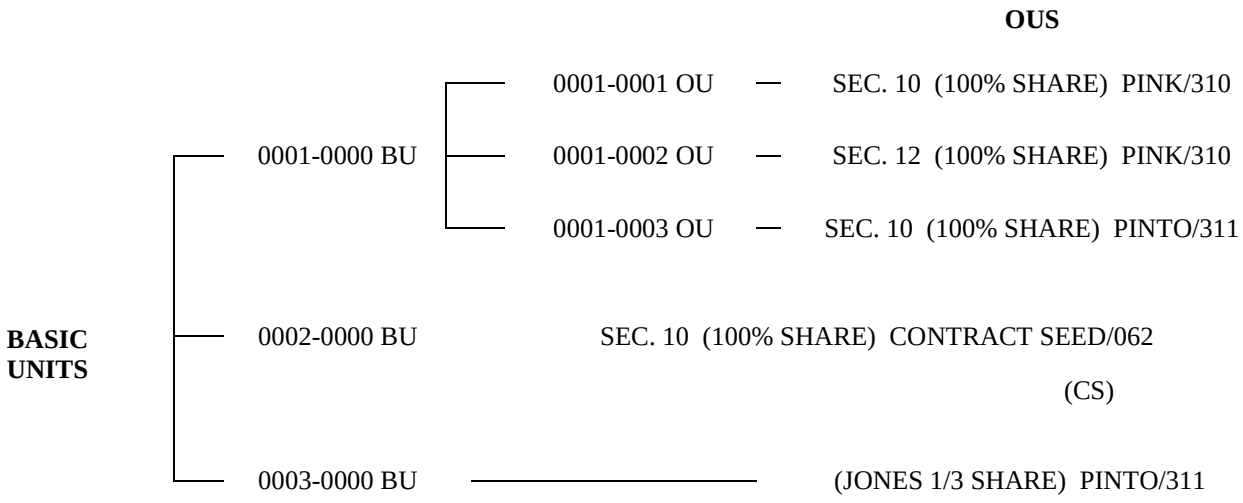


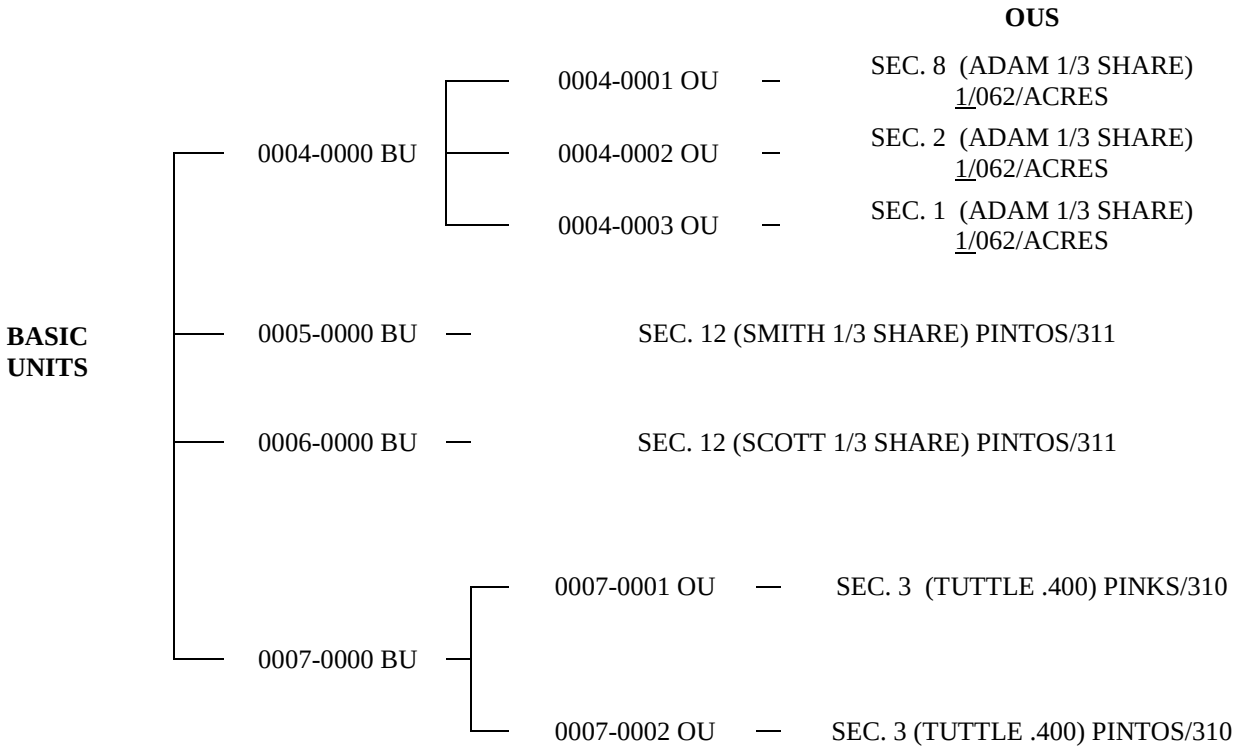


1/ If contract specifies the number of acres. If contract specified only an amount of production one BU.

## E. Flowchart for Determining Unit Structure when Insured Does Not Qualify for Enterprise Units by Irrigated and Non-Irrigated Practices

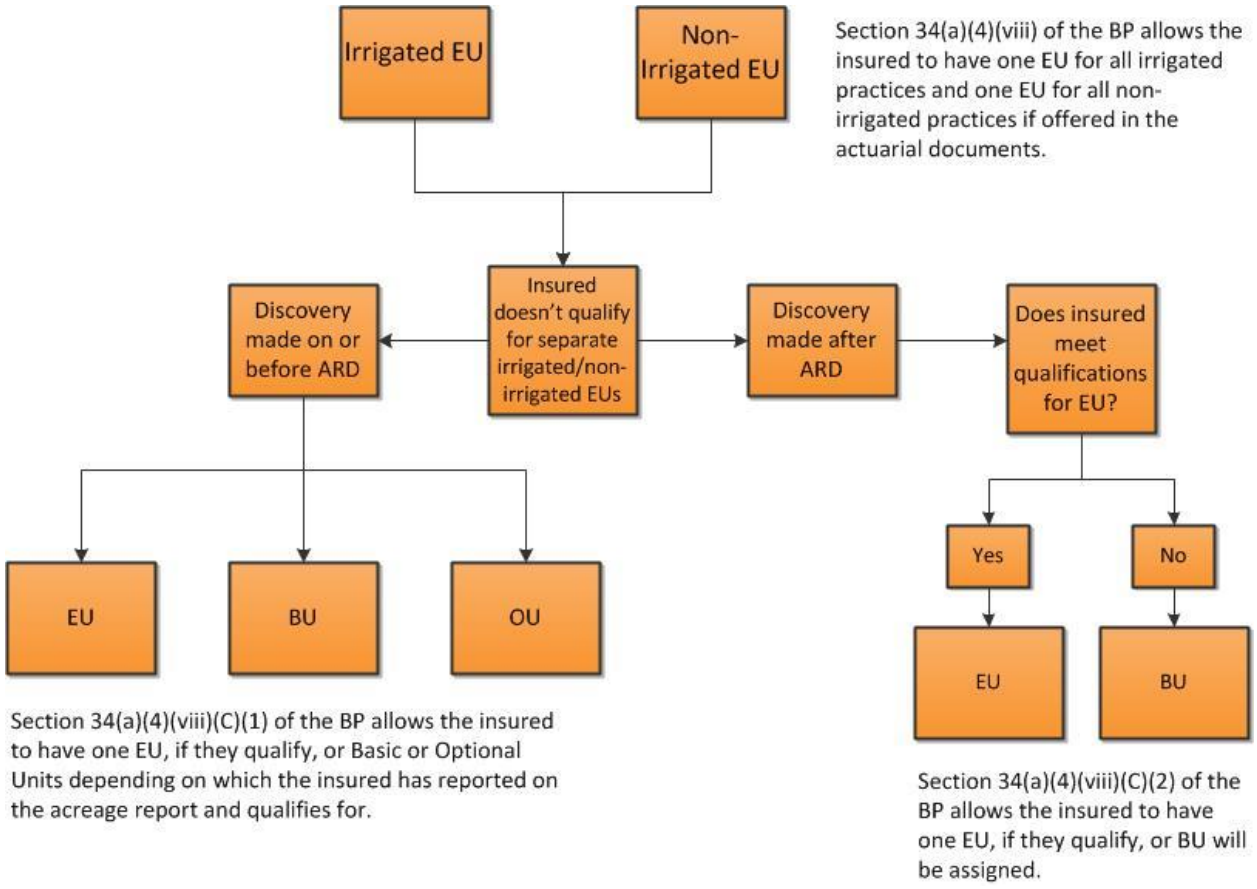

## F. Flowchart for Determining Unit Structure when Insured Does Not Qualify for Enterprise Unit on One Irrigation Practice

The flowchart below illustrates how unit structure is assigned when the insured does not qualify for an EU on one irrigation practice (irrigated or non-irrigated) when they elected to insure one of the irrigation practices as an EU and a different unit structure on the other irrigation practice. For example, the insured elects EU for all irrigated practices and insures all non-irrigated practices as BUs or OUs.

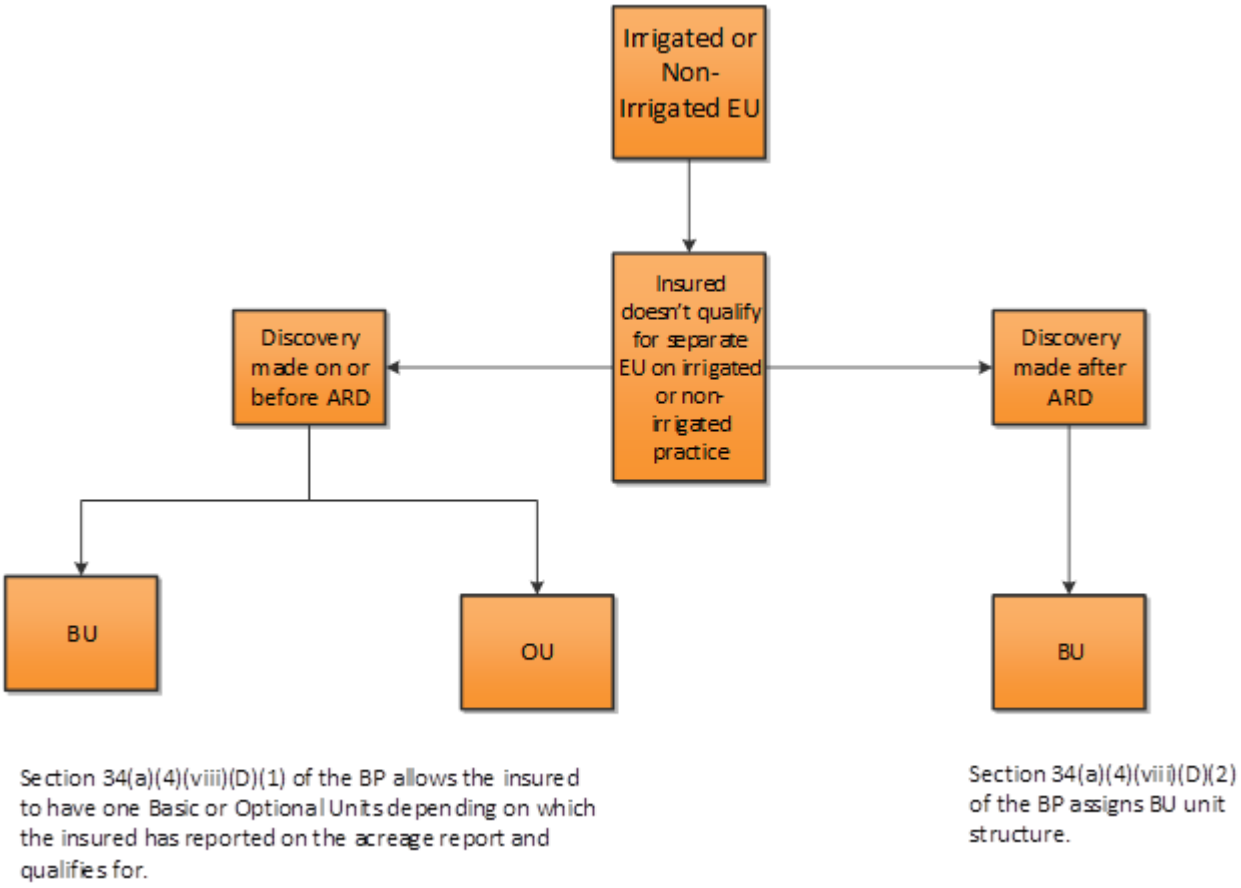

## A. Summerfallow Database

**Example 1** CC Yield Higher Than SF Yield

**Step 1** Calculate the SF yield for a new insured using standard variable T-Yield procedure and compare to the CC approved APH yield. In this example, two years of records have been provided for the crop/county for the current crop year (qualifies for a 90% variable T-Yield). The SF T-Yield = 30; the CC T-Yield = 28. The SF database is retained, but the higher CC database is identified and reported for the SF practice.

| SF | APH | CURRENT | YEAR |
|---|---|---|---|
| YEAR | PROD | ACRES | YIELD |
| 2013 | | | N27 |
| 2014 | | | N27 |
| 2015 | | | N27 |
| 2016 | 4200 | 100.0 | A42 |
| 2017 | | 0.0 | Z |
| | | **TOTAL** | **123/4=31** |
| | 2018 SF | APH | 31 |

| CC | APH | CURRENT | YEAR |
|---|---|---|---|
| YEAR | PROD | ACRES | YIELD |
| 2013 | | | |
| 2014 | | | N25 |
| 2015 | | | N25 |
| 2016 | 3800 | 100.0 | A38 |
| 2017 | 4000 | 100.0 | A40 |
| | | **TOTAL** | **128/4=32** |
| | 2018 CC | APH | 32 |

**Step 2** Retained SF database updated in subsequent crop year (better than CC yield).

| SF APH - SUBSEQUENT YEAR | | | |
|---|---|---|---|
| YEAR | PROD | ACRES | YIELD |
| 2014 | | | T30 |
| 2015 | | | T30 |
| 2016 | 4200 | 100.0 | A42 |
| 2017 | | 0.0 | Z |
| 2018 | 4500 | 100.0 | A45 |
| | | **TOTAL** | **147/4=37** |
| | 2019 SF | APH | 37 |

| CC APH - SUBSEQUENT YEAR | | | |
|---|---|---|---|
| YEAR | PROD | ACRES | YIELD |
| 2014 | | | |
| 2015 | | | T28 |
| 2016 | 3800 | 100.0 | A38 |
| 2017 | 4000 | 100.0 | A40 |
| 2018 | 3700 | 100.0 | A37 |
| | | **TOTAL** | **143/4=36** |
| | 2019 CC | APH | 36 |

## A. Summerfallow Database (Continued)

**Example 2:** SF Yield Higher Than CC Yield

Three years of records have been provided for the crop/county for the current crop year. SF T-Yield = 30; CC T-Yield = 28

In this case, the SF APH would be reported for the SF practice since it is higher than the CC APH.

| SF APH - CURRENT YEAR | | | |
|---|---|---|---|
| YEAR | PROD | ACRES | YIELD |
| 2014 | | | T30 |
| 2015 | | | T30 |
| 2016 | 5200 | 100.0 | A52 |
| 2017 | | 0.0 | Z |
| 2018 | 4800 | 100.0 | A48 |
| | | **TOTAL** | **160/4=40** |
| | 2019 SF | APH | 40 |

| CC APH - CURRENT YEAR | | | |
|---|---|---|---|
| YEAR | PROD | ACRES | YIELD |
| 2014 | | | |
| 2015 | | | T28 |
| 2016 | | | T28 |
| 2017 | 3800 | 100.0 | A38 |
| 2018 | 3400 | 100.0 | A34 |
| | | **TOTAL** | **128/4=32** |
| | 2019 CC | APH | 32 |

## B. Skip-Row Planted Cotton and ELS Cotton Overview

This exhibit provides skip-row planted cotton and ELS cotton percent planted factors, PASS skip-row codes, yield conversion factors, an example of comingled production, and an example of determining planted acres using FSA percent planted factor and calculating per acre yield. Skip-row percent planted factors and PASS skip-row codes are applicable to, and used for, NI cotton, IRR cotton, NI ELS cotton, and IRR ELS cotton. Skip-row yield conversion factors are applicable to, and used only for, NI cotton and NI ELS cotton. Skip-row yield conversion factors are not applicable to, and are not used for, IRR cotton or IRR ELS cotton.

## C. FSA Determination for 30/50 Planting Pattern

Beginning with the 2013 crop year, FSA determined that IRR and NI cotton and ELS cotton planted in a 2 rows planted 1 row skipped with a row width of 30 inches between the 2 planted rows and a 20 inch skipped area is not a skip-row planting. This planting pattern is sometimes referred to as a "30/50" planting pattern because there is 30 inches between the two planted rows and 50 total inches between the rows where the planted row is skipped. No FSA percent planted factor shall be applied to determine the number of planted acres of cotton or ELS cotton planted in a 2 rows planted 1 row skipped with a row width of 30 inches between the 2 planted rows and a 20 inch skipped area.

## D. Percent Planted Factor, Yield Conversion Factor, and PASS Skip-Row Code Applicable to Arkansas, Louisiana, Missouri, and All States East of those States

The following table, Table 1, provides skip-row planting information applicable to Arkansas, Louisiana, Missouri and all states east of those states.

| SKIP-ROW PLANTING PATTERN TABLE 1 | ROW WIDTH [6] | PERCENT PLANTED FACTOR | YIELD CONVERSION FACTOR[7] | PASS SKIP-ROW CODE |
|---|---|---|---|---|
| Solid planted or non-qualifying skip-row patterns, as determined by FSA or RMA | | 1.0 | 1.0 | No PASS skip-row code |
| 2 rows planted 1 row skipped | 30 to 40 inch | 0.6667 | 1.33 | 102 |
| 2 rows planted 1 row narrow skip (40-40-24*) | 30 to 40 inch | 0.7692 | 1.23 | 102 |
| 2 rows planted 1 row narrow skip (38-38-26**) | 30 to 40 inch | 0.7451 | 1.25 | 102 |
| 2 rows planted 2 rows skipped | 30 to 40 inch | 0.5000 | 1.50 | 103 |
| 2 rows planted 4 or more rows skipped | 30 to 40 inch | FSA Rules | 1.67 | 118 |
| 4 rows planted 1 row skipped | 30 to 40 inch | 0.8000 | 1.20 | 106 |
| 4 rows planted 2 rows skipped | 30 to 40 inch | 0.6667 | 1.33 | 107 |
| 4 rows planted 4 rows skipped | 30 to 40 inch | 0.5000 | 1.33 | 108 |
| 6 rows planted 1 row skipped | 30 to 40 inch | 0.8571 | 1.14 | 111 |
| 6 rows planted 2 or more rows skipped | 30 to 40 inch | FSA Rules | 1.20 | 112 |
| Other | Cannot exceed 40 inch | FSA Rules | RMA Rules[8] | 117 |

[6] Row widths are equal unless otherwise indicated.
[7] Skip-row yield conversion factors are not applicable to, and are not used for, IRR cotton or IRR ELS cotton.
* 40-inch planted row width with 24-inch skip row width.
** 38-inch planted row width with 26-inch skip width.
[8] See RMA Rules Below.

## D. Percent Planted Factor, Yield Conversion Factor… (Continued)

The following table provides instructions for calculating the skip-row yield conversion factor for NI skip-row planted cotton and ELS cotton in Arkansas, Louisiana, Missouri and all states east of those states when the skip-row planting pattern:

(1) has unequal row widths within the pattern; or
(2) is not identified in Table 1.

| STEP | ACTION | RESULT |
|---|---|---|
| **1** | Determine the width, in inches, of the skipped area in the planting pattern. | Width of skipped area in pattern. |
| **2** | Determine the width, in inches, of the entire planting pattern. | Width of entire planting pattern. |
| **3** | Divide the result of step 1 by the result of step 2, and round to 2 decimal places. | |
| **4** | Add 1.00 to result of step 3. | Skip-row yield conversion factor, subject to limitation. |

The calculated skip-row yield conversion factor shall not exceed:

(1) 1.67 for any planting pattern or part of a planting pattern of 1 planted row or 2 consecutive planted rows alternating with a skipped area;

(2) 1.45 for any planting pattern or part of a planting pattern of 3 consecutive planted rows alternating with a skipped area;

(3) 1.33 for any plating pattern or part of a planting pattern of 4 consecutive planted rows alternating with a skipped area;

(4) 1.20 for any plating pattern or part of a planting pattern of 5 or 6 consecutive planted rows alternating with a skipped area; or

(5) 1.00 for any plating pattern or part of a planting pattern of 7 consecutive planted rows alternating with a skipped area.

**Example:** Insured A planted NI cotton in Arkansas using a 3 rows planted 1 row skipped with 40 inch rows planting pattern. The width of the skipped area in the planting pattern is 40 inches (step 1). The width of the entire planting pattern is 160 inches (step 2). The calculated yield conversion factor is 1.25 (40 ÷ 160 = 0.25 + 1.00) (step 3 and 4).

## E. Percent Planted Factor, Yield Conversion Factor, and PASS Skip-Row Code Applicable to New Mexico and the Following Counties in Texas: Baylor, Concho, Runnels, Schleicher, Shackleford, Sutton, Taylor, Throckmorton, Valverde, Wilbarger and All Counties West of Those Counties

The following table, Table 2, provides skip-row planting information applicable to New Mexico and the following counties in Texas: Baylor, Concho, Runnels, Schleicher, Shackleford, Sutton, Taylor, Throckmorton, Valverde, Wilbarger and all counties west of those counties.

| Skip-Row Planting Pattern Table 2 | Row Width[9] | Percent Planted Factor | Yield Conversion Factor[10] | PASS Skip-Row Code |
|---|---|---|---|---|
| Solid planted or non-qualifying skip-row patterns, as determined by FSA or RMA | | 1.0 | 1.0 | No PASS skip-row code |
| 1 row planted 1 row skipped | 40 inch | 0.5000 | 1.32 | 201 |
| 1 row planted 1 row skipped | 36 inch | 0.5556 | 1.19 | 201 |
| 1 row planted 1 row skipped | 32 inch | 0.6250 | 1.06 | 201 |
| 2 rows planted 1 row skipped | 30 to 40 inch | 0.6667 | 1.29 | 202 |
| 2 rows planted 2 rows skipped | 30 to 40 inch | 0.5000 | 1.29 | 203 |
| 3 rows planted 1 row skipped | 30 to 40 inch | 0.7500 | 1.19 | 204 |
| 3 rows planted 2 rows skipped | 30 to 40 inch | 0.6000 | 1.19 | 205 |
| 4 rows planted 1 row skipped | 30 to 40 inch | 0.8000 | 1.14 | 206 |
| 4 rows planted 2 rows skipped | 30 to 40 inch | 0.6667 | 1.14 | 207 |
| 4 rows planted 4 rows skipped | 30 to 40 inch | 0.5000 | 1.02 | 208 |
| 5 rows planted 1 row skipped | 30 to 40 inch | 0.8333 | 1.12 | 209 |
| 5 rows planted 2 rows skipped | 30 to 40 inch | 0.7143 | 1.12 | 210 |
| 6 rows planted 1 row skipped | 30 to 40 inch | 0.8571 | 1.10 | 211 |
| 6 rows planted 2 rows skipped | 30 to 40 inch | 0.7500 | 1.10 | 212 |
| 7 rows planted 1 row skipped | 30 to 40 inch | 0.8750 | 1.08 | 213 |
| 7 rows planted 2 rows skipped | 30 to 40 inch | 0.7777 | 1.08 | 214 |
| 8 rows planted 1 row skipped | 30 to 40 inch | 0.8889 | 1.07 | 215 |
| 8 rows planted 2 rows skipped | 30 to 40 inch | 0.8000 | 1.07 | 216 |
| Other | Cannot exceed 40 inch | FSA Rules | RMA Rules[11] | 217 |

[9] Row widths are equal unless otherwise indicated.
[10] Skip-row yield conversion factors are not applicable to, and are not used for, IRR cotton or IRR ELS cotton.
[11] See RMA Rules below Table 3 in subparagraph E.

## F. Percent Planted Factor, Yield Conversion Factor, and PASS Skip-Row Code Applicable to Kansas, Oklahoma, and All Counties in Texas for Which Table 2 Does Not Apply

The following table, Table 3, provides skip-row planting information applicable to Kansas, Oklahoma and all counties in Texas for which Table 2 in D does not apply.

| Skip-Row Planting Pattern Table 3 | Row Width[12] | Percent Planted Factor | Yield Conversion Factor[13] | PASS Skip-Row Code |
|---|---|---|---|---|
| Solid planted or non-qualifying skip-row patterns, as determined by FSA or RMA | | 1.0 | 1.0 | No PASS skip-row code |
| 1 row planted 1 row skipped | 40 inch | 0.5000 | 1.40 | 301 |
| 1 row planted 1 row skipped | 36 inch | 0.5556 | 1.26 | 301 |
| 1 row planted 1 row skipped | 32 inch | 0.6250 | 1.12 | 301 |
| 2 rows planted 1 row skipped | 30 to 40 inch | 0.6667 | 1.35 | 302 |
| 2 rows planted 2 rows skipped | 30 to 40 inch | 0.5000 | 1.35 | 303 |
| 3 rows planted 1 row skipped | 30 to 40 inch | 0.7500 | 1.23 | 304 |
| 3 rows planted 2 rows skipped | 30 to 40 inch | 0.6000 | 1.23 | 305 |
| 4 rows planted 1 row skipped | 30 to 40 inch | 0.8000 | 1.17 | 306 |
| 4 rows planted 2 rows skipped | 30 to 40 inch | 0.6667 | 1.17 | 307 |
| 4 rows planted 4 rows skipped | 30 to 40 inch | 0.5000 | 1.04 | 308 |
| 5 rows planted 1 row skipped | 30 to 40 inch | 0.8333 | 1.14 | 309 |
| 5 rows planted 2 rows skipped | 30 to 40 inch | 0.7143 | 1.14 | 310 |
| 6 rows planted 1 row skipped | 30 to 40 inch | 0.8571 | 1.12 | 311 |
| 6 rows planted 2 rows skipped | 30 to 40 inch | 0.7500 | 1.12 | 312 |
| 7 rows planted 1 row skipped | 30 to 40 inch | 0.8750 | 1.10 | 313 |
| 7 rows planted 2 rows skipped | 30 to 40 inch | 0.7777 | 1.10 | 314 |
| 8 rows planted 1 row skipped | 30 to 40 inch | 0.8889 | 1.09 | 315 |
| 8 rows planted 2 rows skipped | 30 to 40 inch | 0.8000 | 1.09 | 316 |
| Other | Cannot exceed 40 inch | FSA Rules | RMA Rules[14] | 317 |

The following Individual Row Factor table provides a row factor for each individual row, including the skipped row, in the planting pattern to be used to calculate the skip-row yield conversion factor for skip-row planting patterns not listed in Table 2 or Table 3 for NI skip-row planted cotton and NI ELS cotton in Kansas, Oklahoma and Texas.

[12] Row widths are equal unless otherwise indicated

[13] Skip-row yield conversion factors are not applicable to, and are not used for, IRR cotton or IRR ELS cotton.

[14] See RMA rules below.

## F. … Table 2 Does Not Apply (Continued)

| County where crop is planted | INDIVIDUAL ROW FACTORS | | | | |
|---|---|---|---|---|---|
| | Row Width | Skipped Row | Planted row on both sides | Planted row on one side, skipped row on other side | Skipped row on both sides |
| Counties in Table 2 | 40 | 0.00 | 1.00 | 1.29 | 1.32 |
| | 36 | 0.00 | 1.00 | 1.29 | 1.19 |
| | 32 | 0.00 | 1.00 | 1.29 | 1.06 |
| Counties in Table 3 | 40 | 0.00 | 1.00 | 1.35 | 1.40 |
| | 36 | 0.00 | 1.00 | 1.35 | 1.26 |
| | 32 | 0.00 | 1.00 | 1.35 | 1.12 |

The following table provides instructions to calculate the skip-row yield conversion factor for skip-row planting patterns not listed in Table 2 or Table 3 for NI skip-row planted cotton and NI ELS cotton in Kansas, Oklahoma, and Texas.

| STEP | ACTION |
|---|---|
| **1** | Using the Individual Row Factor table, assign the appropriate row factor for each individual row, including the skipped row, in the planting pattern. Row factors are based on the planting pattern only; therefore, turning at the end of the field has no effect on the calculation. |
| **2** | Sum the row factors from step 1. |
| **3** | Divide the result of step 2 by the total number of rows in the planting pattern, including the skipped rows. Round the result to 4 decimals. |
| **4** | Divide the result of step 3 by the FSA percent planted factor applicable to the skip-row planting pattern. Round the result to 2 decimals. |

**Example 1:** Insured C planted NI cotton in Baylor County, Texas, using a 2 rows planted, 3 rows skipped, 1 row planted with 40 inch rows planting pattern. Assign the appropriate row factor to each individual row using the Individual Row Factor table (step 1) as follows.

| PLANTING PATTERN = 2x3x1 with 40-inch row width | | | | | | |
|---|---|---|---|---|---|---|
| **Row** | 1 | 2 | 3 | 4 | 5 | 6 |
| | Planted | Planted | Skipped | Skipped | Skipped | Planted |
| **Assigned Row Factor** | 1.29 | 1.29 | 0.00 | 0.00 | 0.00 | 1.32 |

Sum the row factors (step 2), then divide the total by the total rows in the planting pattern (step 3). 1.29 + 1.29 + 0.00 + 0.00 + 0.00 + 1.32 = 3.90 ÷ 6 rows = 0.6500

Divide the result by the FSA percent planted factor for the planting pattern (step 4). The skip-row yield conversion factor for the planting pattern is 1.30 (0.6500 ÷ 0.5000).

## F. … Table 2 Does Not Apply (Continued)

**Example 2:** Insured D planted NI cotton in Baylor County, Texas, using a 4 rows planted, 1 row skipped, 2 rows planted, 1 row skipped with 36 inch rows planting pattern. Assign the appropriate row factor to each individual row using the Individual Row Factor table (step 1) as follows.

| **PLANTING PATTERN = 4x1x2x1 with 36-inch row width** | | | | | | | | |
|---|---|---|---|---|---|---|---|---|
| **Row** | 1 | 2 | 3 | 4 | 5 | 6 | 7 | 8 |
| | Planted | Planted | Planted | Planted | Skipped | Planted | Planted | Skipped |
| **Assigned Row Factor** | 1.29 | 1.00 | 1.00 | 1.29 | 0.00 | 1.29 | 1.29 | 0.00 |

Sum the row factors (step 2), then divide the total by the total rows in the planting pattern (step 3). 1.29 + 1.00 + 1.00 + 1.29 + 0.00 + 1.29 + 1.29 + 0.00 = 7.16 ÷ 8 rows = 0.8950

Divide the result by the FSA percent planted factor for the planting pattern (step 4). The skip-row yield conversion factor for the planting pattern is 1.19 (0.8950 ÷ 0.7500).

## G. Determining Planted Acres Using FSA Percent Planted Factor and Calculating Per Acre Yield Using Skip-Row Yield Conversion Factor

The following is an example of how to determine planted acres using FSA percent planted factor and calculating per acre yield using skip-row yield conversion factor.

Insured E in Baylor County, Texas, certifies the following physical land acres and total production for the most recent six crop years. Insured E planted NI cotton using a 2 rows planted, 1 row skipped with 40 inch rows planting pattern in each of the six years certified.

| CROP YEAR | PHYSICAL LAND ACRES | TOTAL PRODUCTION |
|---|---|---|
| 2013 | 930.3 | 217,070 lbs. cotton |
| 2014 | 675.0 | 182,250 lbs. cotton |
| 2015 | 600.0 | 128,800 lbs. cotton |
| 2016 | 765.0 | 143,310 lbs. cotton |
| 2017 | 1050.0 | 259,000 lbs. cotton |
| 2018 | 600.0 | 122,010 lbs. cotton |

## G. Determining Planted Acres Using FSA Percent Planted Factor… (Continued)

The following is an example of using a multipurpose production and yield worksheet to determine the number of planted acres using the applicable FSA percent planted factor and calculating the per acre yield using the appropriate skip-row yield conversion factor based on the skip-row planting pattern used and the county in which the acreage is located. The acres considered planted and the factored production for each year is entered in the insured's APH database.

| Crop Year | 1<br>Physical Land Acres | 2<br>FSA Percent Planted Factor | 3<br>Acres Considered Planted (1 x 2) | 4<br>Gross Production | 5<br>Yield Conversion Factor | 6<br>Factored Production (4 ÷ 5) |
|---|---|---|---|---|---|---|
| 2013 | 930.3 | 0.6667 | 620.2 | 217,070 | 1.29 | 168,271 |
| 2014 | 675.0 | 0.6667 | 450.0 | 182,250 | 1.29 | 141,279 |
| 2015 | 600.0 | 0.6667 | 400.0 | 128,800 | 1.29 | 99,845 |
| 2016 | 765.0 | 0.6667 | 510.0 | 143,310 | 1.29 | 111,093 |
| 2017 | 1050.0 | 0.6667 | 700.0 | 259,000 | 1.29 | 200,775 |
| 2018 | 600.0 | 0.6667 | 400.0 | 122,010 | 1.29 | 94,581 |

## H. Commingled Production from IRR Solid-Planted and NI Skip-Row Planted Cotton

Insured F in Baylor County, Texas, commingled production between IRR solid-planted cotton and NI skip-row planted cotton. Total production of 32,710 pounds was produced on the following acres.

(1) 50 IRR solid planted acres.

(2) 29.4 NI acres planted in a 2 planted rows, 3 skipped rows, 1 planted row with 40-inch row width planting pattern with a calculated yield conversion factor of 1.30.

(3) 26.6 NI acres planted in a 2 planted rows, 4 skipped rows with 40 inch row width planting pattern with a calculated yield conversion factor 1.28.

(4) 95.0 NI acres planted in a 2 planted rows, 1 skipped row with 40 inch row width planting pattern with a yield conversion factor 1.29.

The skip-row planted acres (29.4, 26.6, and 95.0) are the determined planted acres after applying the applicable FSA percent planted factor.

## H. Commingled Production… (Continued)

**Step 1:** is to determine the IRR and NI yield using a Multi-Purpose Production and Yield Worksheet.

| 1 | 2 | 3 | 4 | 5 | 6 |
|---|---|---|---|---|---|
| **PRACTICE** | **PLANTED ACRES** | **100% "T" YIELD** | **YIELD EXTENSION (2 X 3)** | **YIELD FACTOR (TOTAL PRODUCTION ÷ TOTAL OF YIELD EXTENSION)** | **YIELD FACTOR X T-YIELD (3 X 5)** |
| IR | 50.0 | 350 | 17,500 | 0.88 (32,710 ÷ 37,130) | 308 |
| NI | 151.0 | 130 | 19,630 | 0.88 (32,710 ÷ 37,130) | 114 |
| **Total of Yield Extension** | | | **37,130** | | |

**Step 2:** is to determine the yield factor for the NI skip-row acreage.

| 1 | 2 | 3 | 4 | 5 | 6 |
|---|---|---|---|---|---|
| **PLANTING PATTERN** | **DETERMINED SKIP-ROW ACRES** | **YIELD CONVERSION** | **FACTORED ACRES (2 X 3)** | **YIELD CONVERSION FACTOR (4 ÷ 2)** | **SOLID PLANTED YIELD[15]** |
| 2x3x1 – 40" | 29.4 | 1.30 | 38.2 | 1.29 | 88 |
| 2x4 – 40" | 26.6 | 1.28 | 34.1 | 1.29 | 88 |
| 2x1 – 40" | 95.0 | 1.29 | 122.6 | 1.29 | 88 |
| **TOTAL** | **151.0** | | **194.9** | | |

Insured F reported the four most recent crop year's production. Unit 0001-0001's production for the next most recent crop year was commingled between IRR solid planted acreage and NI skip-row planted acreage, as described above.

| **UNIT 0001-0001** | | **IRRIGATED** | |
|---|---|---|---|
| **YEAR** | **PRODUCTION** | **ACRES** | **YIELD** |
| 20XX | 29,824 | 64.0 | A466 |
| 20XX | 48,400 | 55.0 | A880 |
| 20XX | 15,400* | 50.0 | A308 |
| 20XX | 36,600* | 52.0 | A704 |
| | | | TOTAL: 2358 |
| | PRELIMINARY YIELD: 590 | **APPROVED APH YIELD:** | **590** |

[15] NI Yield from Step 1 ÷ Yield Conversion Factor (Column 5)

* Production Commingled

**H. Commingled Production… (Continued)**

| UNIT 0001-0002 | | NON-IRRIGATED | |
|---|---|---|---|
| YEAR | PRODUCTION | ACRES | YIELD |
| 20XX | 37,200 | 200.0 | A186 |
| 20XX | 28,700 | 140.0 | A205 |
| 20XX | 13,288** | 151.0 | A88 |
| 20XX | 36,660 | 244.0 | A150 |
| | | | Total: 629 |
| PRELIMINARY YIELD: 157 | | APPROVED APH YIELD: 157 | |
| PRIOR YIELD: N/A | | | |

**Production Commingled and Factored

**Reserved**

**Reserved**

## A. Soybeans Example of Completed Production Report for Production Reporting Requirements

See Part 13.

| **PRODUCTION REPORT** | | | | | | | | | | | | | | | | |
|---|---|---|---|---|---|---|---|---|---|---|---|---|---|---|---|---|
| Policy #: XX-XXX-XXXX | | | State: Insured State (XX) | | | | | | | | County: Insured County (XXX) | | | | | |
| **Insured/Policyholder Information** | | | | | | | | | **AIP Information** | | **Agency/Agent Information** | | | | | |
| Name: | I. M. Insured | | | | | | | | Name: I.M. Company | | Name: | I. M. Agent | | | | |
| Mailing address: | Insured Address State, Zip | | | | | | | | | | Mailing address: | Agent/Agency Address State, Zip | | | | |
| Telephone #: | (XXX) XXX-XXXX | | | | | | | | Address: Company Address State, Zip | | Telephone #: | (XXX) XXX-XXXX | | | | |
| Insured id # & type: | XXX-XX-XXXX SSN | | | | | | | | | | Agent Code: | XXXXXX | | | | |
| Spouse's name: | Also Insured | | | | | | | | | | | | | | | |
| Spouse's id #: | XXX-XX-XXXX | | | | | | | | | | Insured signature & date | | | | | |
| Crop year | Multi Crop Year Reporting Reason | Unit # | Crop | Practice: | Irr. Practice: | Cropping Practice: | Organic Practice: | Interval: | Acres | Total Production | Yield Descriptor | Yield | Legal Description | Farm-Tract-Field # | | |
| | | | | NI (003) | | | | | | | | | | | | |
| 2018 | n/a | 0001-0001 | Soybeans (0081) | Type: | Comm Type | Class: | Sub-Class: | Intended use: | 326.8 | 14,052 | A | 43 | XX XXXX XXXX | XXXX XXXXX XX XXX | | |
| | | | | NTS (997) | | | | | | | | | | | | |
| Other Persons | Processor Number/Name | Record Type | Insurability | Area Classification | | | | | | | | | # Of Trees/Vines | Other: | | |
| none | n/a | Production Sold | Insurable | | | | | | | | | | N/A | | | |
| Crop year | Multi Crop Year Reporting Reason | Unit # | Crop | Practice: | Irr. Practice: | Cropping Practice: | Organic Practice: | Interval: | Acres | Total Production | Yield Descriptor | Yield | Land Description | Farm-Tract-Field # | | |
| | | | | | | | | | | | | | | | | |
| | | | | Type: | Comm Type: | Class: | Sub-Class: | Intended use: | | | | | | | | |
| | | | | | | | | | | | | | | | | |
| Other Persons | Processor Number/Name | Record Type | Insurability | Area Classification | | | | | | | | | # Of Trees/Vines | Other: | | |
| | | | | | | | | | | | | | | | | |

SAMPLE

## B. Corn Example of Completed Production Report for Production Reporting Requirements

<table>
<tr><td colspan="15">PRODUCTION REPORT</td></tr>
<tr><td colspan="5">Policy #: XX-XXX-XXXX</td><td colspan="5">State: Insured State (XX)</td><td colspan="5">County: Insured County (XXX)</td></tr>
<tr><td colspan="5">Insured/Policyholder Information</td><td colspan="5">AIP Information</td><td colspan="5">Agency/Agent Information</td></tr>
<tr><td colspan="2">Name:</td><td colspan="3">I. M. Insured</td><td colspan="5" rowspan="2">Name:<br>I.M. Company</td><td colspan="2">Name:</td><td colspan="3">I. M. Agent</td></tr>
<tr><td colspan="2">Mailing address:</td><td colspan="3">Insured Address<br>State, Zip</td><td colspan="2">Mailing address:</td><td colspan="3">Agent/Agency Address<br>State, Zip</td></tr>
<tr><td colspan="2">Telephone #:</td><td colspan="3">(XXX) XXX-XXXX</td><td colspan="5" rowspan="4">Address:<br>Company Address<br>State, Zip</td><td colspan="2">Telephone #:</td><td colspan="3">(XXX) XXX-XXXX</td></tr>
<tr><td colspan="2">Insured id # & type:</td><td colspan="3">XXX-XX-XXXX SSN</td><td colspan="2">Agent Code:</td><td colspan="3">XXXXXX</td></tr>
<tr><td colspan="2">Spouse’s name:</td><td colspan="3">Also Insured</td><td colspan="5"></td></tr>
<tr><td colspan="2">Spouse’s id #:</td><td colspan="3">XXX-XX-XXXX</td><td colspan="2">Insured signature & date</td><td colspan="3"></td></tr>
<tr><td rowspan="2">Crop year</td><td rowspan="2">Multi Crop Year Reporting Reason</td><td rowspan="2">Unit #</td><td rowspan="2">Crop</td><td>Practice:</td><td>Irr. Practice</td><td>Cropping Practice</td><td>Organic Practice</td><td>Interval</td><td rowspan="2">Acres</td><td rowspan="2">Total Production</td><td rowspan="2">Yield Descriptor</td><td rowspan="2">Yield</td><td rowspan="2">Legal Description</td><td rowspan="2">Farm-Tract-Field #</td></tr>
<tr><td>I (002)</td><td></td><td></td><td></td><td></td></tr>
<tr><td rowspan="2">2018</td><td rowspan="2">n/a</td><td rowspan="2">0002-0002</td><td rowspan="2">Corn (0041)</td><td>Type:</td><td>Type:</td><td>Class:</td><td>Sub-Class:</td><td>Intended use:</td><td rowspan="2">87.4</td><td rowspan="2">18,092</td><td rowspan="2">A</td><td rowspan="2">207</td><td rowspan="2">XX XXXX XXXX</td><td rowspan="2">XXXX XXXXX XX XXX</td></tr>
<tr><td>NTS (997)</td><td></td><td></td><td></td><td></td></tr>
<tr><td>Other Persons</td><td>Processor Number/Name</td><td>Record Type</td><td>Insurability</td><td colspan="5">Area Classification</td><td rowspan="2"></td><td rowspan="2"></td><td># Of Trees/Vines</td><td rowspan="2">Other:</td></tr>
<tr><td>T. Tenant 2/5</td><td>n/a</td><td>Production Sold</td><td>Insurable</td><td colspan="5"></td><td></td></tr>
<tr><td rowspan="2">Crop year</td><td rowspan="2">Multi Crop Year Reporting Reason</td><td rowspan="2">Unit #</td><td rowspan="2">Crop</td><td>Irr. Practice:</td><td>Cropping Practice:</td><td>Organic Practice:</td><td>Interval:</td><td>Use of Acreage:</td><td rowspan="2">Acres</td><td rowspan="2">Total Production</td><td rowspan="2">Yield Descriptor</td><td rowspan="2">Yield</td><td rowspan="2">Legal Description</td><td rowspan="2">Farm-Tract-Field #</td></tr>
<tr><td></td><td></td><td></td><td></td><td></td></tr>
<tr><td rowspan="2"></td><td rowspan="2"></td><td rowspan="2"></td><td rowspan="2"></td><td>Type:</td><td>Class:</td><td>Sub-Class:</td><td colspan="2"></td><td>Intended use:</td><td rowspan="2"></td><td rowspan="2"></td><td rowspan="2"></td><td rowspan="2"></td><td rowspan="2"></td><td rowspan="2"></td></tr>
<tr><td></td><td></td><td></td><td colspan="2"></td><td></td></tr>
<tr><td>Other Persons</td><td>Processor Number/Name</td><td>Record Type</td><td>Insurability</td><td colspan="6">Area Classification</td><td rowspan="2"></td><td rowspan="2"></td><td># Of Trees/Vines</td><td rowspan="2">Other:</td></tr>
<tr><td></td><td></td><td></td><td></td><td colspan="6"></td><td></td></tr>
</table>

SAMPLE

**Reserved**

**Reserved (Continued)**

## A. Examples of Completed APH Databases-New Insured

A new insured provides a production report for the prior crop year only and then APH database is established.

| | | |
|---|---|---|
| Insured's Name and Address:<br><br>I.M. Insured<br>Street<br>State, Zip<br><br>Phone Number: (XXX) XXX-XXXX<br>Identification Number: XXX-XX-XXXX | Required Field Review: (check one)<br>Yes □ No □<br>Required Inspection: (check one)<br>Yes □ No □<br>AIP Name and Address:<br><br>I.M. Company<br>Street<br>State, Zip | Agent Name and Address:<br><br>I.M. Agent<br>Street<br>State, Zip<br><br>Phone Number: (XXX) XXX-XXXX<br><br>Agent Code: XXXXXX |
| Policy Number: XX-XXX-XXXX | State: Insured State (XX) | County: Insured County (XXX) |

Practice: FAC-NI (043) | Type: Commodity (091)

| Irr. Practice: | Cropping Practice: | Organic Practice: | Interval: Use of Acreage: | Commodity Type: | Class: | Sub-class: | Intended use: |
|---|---|---|---|---|---|---|---|
| | | | | | | | |

| Crop Year: 2019 | Crop Year | Total Production | Acres | Yield |
|---|---|---|---|---|
| Crop: Soybeans (0081) | 2009 | | | |
| | 2010 | | | |
| Unit Number: 0001-0001 OU | 2011 | | | |
| | 2012 | | | |
| | 2013 | | | |
| Others sharing in crop: | 2014 | | | |
| | 2015 | | | E17 |
| Land Description: | 2016 | | | E17 |
| Section: XX | 2017 | | | E17 |
| Township: XXXX | 2018 | 2,976.0 | 95.0 | A31 |
| Range: XXXX | Average Yield: | Total: | | 82 |
| Other Land Identifier: | | Approved APH Yield: | | 21 |
| FSA Farm: XXXX | Preliminary Yield: 21 | Rate Yield: | | |
| Tract: XXXXX | | Prior Year Yield: | | N/A |
| Field Number: XX | T-Yield: 21 | Other: | | |
| Area Classification: | Yield Indicator: | | | |

SAMPLE

## B. Examples of Completed APH Databases-New Producer

The insured has met the requirements for a New Producer and has not previously produced the crop/P/T in the county.

| | | |
|---|---|---|
| Insured's Name and Address:<br><br>I.M. Insured<br>Street<br>State, Zip<br><br>Phone Number: (XXX) XXX-XXXX<br><br>Identification Number:<br>XXX-XX-XXXX | Required Field Review: (check one)<br>Yes □ No □<br>Required Inspection: (check one)<br>Yes □ No □<br>AIP Name and Address:<br><br>I.M. Company<br>Street<br>State, Zip | Agent Name and Address:<br><br>I.M. Agent<br>Street<br>State, Zip<br><br>Phone Number: (XXX) XXX-XXXX<br><br>Agent Code: XXXXXX |
| Policy Number: XX-XXX-XXXX | State: Insured State (XX) | County: Insured County (XXX) |

| | | | | | | | | |
|---|---|---|---|---|---|---|---|---|
| Practice: NI (003) | | | Type: Commodity (091) | | | | | |
| Irr. Practice: | Cropping Practice: | Organic Practice: | Interval: | Commodity Type: | Class: | Sub-class: | Intended use: | |
| | | | | | | | | |
| Crop Year: 2019 | | | Crop Year | Total Production | Acres | Yield | | |
| Crop: Soybeans (0081) | | | 2012 | | | | | |
| Unit Number: | | | 2013 | | | | | |
| Others sharing in crop: | | | 2014 | | | | | |
| | | | 2015 | | | I46 | | |
| Land Description: | | | 2016 | | | I46 | | |
| Section: XX | | | 2017 | | | I46 | | |
| Township: XXXX | | | 2018 | | | I46 | | |
| Range: XXXX<br>Other Land Identifier: | | | Average Yield: | Total: | | 184 | | |
| | | | | Approved APH Yield: | | 46 | | |
| FSA Farm: XXXX<br>Tract: XXXXX<br>Field Number: XX | | | Preliminary Yield: 46 | Rate Yield: | | | | |
| | | | | Prior Year Yield: | | N/A | | |
| | | | T-Yield: 46 | Other: | | | | |
| | | | Yield Indicator: | | | | | |

SAMPLE

## C. Examples of Completed APH Databases –Carryover Insured

A carryover insured has a previously established APH database. The insured provides a production report indicating the prior year's production and acreage for the unit/P/T, which is added to the existing APH database.

| | | |
|---|---|---|
| Insured's Name and Address:<br><br>I.M. Insured<br>Street<br>State, Zip<br><br>Phone Number: (XXX) XXX-XXXX<br><br>Identification Number:<br>XXX-XX-XXXX | Required Field Review: (check one)<br>Yes □ No □<br>Required Inspection: (check one)<br>Yes □ No □<br>AIP Name and Address:<br><br>I.M. Company<br>Street<br>State, Zip | Agent Name and Address:<br><br>I.M. Agent<br>Street<br>State, Zip<br><br>Phone Number: (XXX) XXX-XXXX<br><br>Agent Code: XXXXXX |
| Policy Number: XX-XXX-XXXX | State: Insured State (XX) | County: Insured County (XXX) |
| Practice: NI (003) | Type: Commodity (091) | |

| Irr. Practice: | Cropping Practice: | Organic Practice: | Interval: | Type: | Class: | Sub-class: | Intended use: |
|---|---|---|---|---|---|---|---|
| | | | | | | | |

| | | | | |
|---|---|---|---|---|
| Crop Year: 2019 | Crop Year | Total Production | Acres | Yield |
| Crop: Soybeans (0081) | | | | |
| Unit Number:<br>0001-0001 OU | 2011 | | | |
| | 2012 | | | |
| | 2013 | 2,800.0 | 100.0 | A28 |
| Others sharing in crop: | 2014 | 5,850.0 | 150.0 | A39 |
| | 2015 | 5,160.0 | 120.0 | A43 |
| Land Description: | 2016 | 8,800.0 | 220.5 | A40 |
| Section: XX | 2017 | 2,970.0 | 110.0 | A27 |
| Township: XXXX | 2018 | 2,940.0 | 105.0 | A28 |
| Range: XXXX | Average Yield: | Total: | | 205 |
| Other Land Identifier: | | Approved APH Yield: | | 34 |
| FSA Farm: XXXX | Preliminary Yield: 34 | Rate Yield: | | |
| Tract: XXXXX | | Prior Year Yield: | | 33 |
| Field Number: XX | T-Yield: 35 | Other: | | |
| | Yield Indicator: | | | |

SAMPLE

## D. Examples of Completed APH Databases-Zero-Acreage Reported

A carryover insured has previously established an APH database. A production report showing no acreage was planted the prior crop year for the unit/P/T and the existing APH database is updated.

| | | |
|---|---|---|
| Insured's Name and Address:<br><br>I.M. Insured<br>Street<br>State, Zip<br><br>Phone Number: (XXX) XXX-XXXX<br><br>Identification Number:<br>XXX-XX-XXXX | Required Field Review: (check one)<br>Yes □ No □<br>Required Inspection: (check one)<br>Yes □ No □<br>AIP Name and Address:<br><br>I.M. Company<br>Street<br>State, Zip | Agent Name and Address:<br><br>I.M. Agent<br>Street<br>State, Zip<br><br>Phone Number: (XXX) XXX-XXXX<br><br>Agent Code: XXXXXX |
| Policy Number: XX-XXX-XXXX | State: Insured State (XX) | County: Insured County (XXX) |

Practice: NI (003) | Type: Grain (016)

| Irr. Practice: | Cropping Practice: | Organic Practice: | Interval: | Commodity Type: | Class: | Sub-class: | Intended use: |
|---|---|---|---|---|---|---|---|
| | | | | | | | |

Crop Year: 2019

Crop: Corn (0041)

0001-0001 OU

Others sharing in crop:

Land Description:
Section: XX
Township: XXXX
Range: XXXX
Other Land Identifier:

FSA Farm: XXXX
Tract: XXXXX
Field Number: XX

| Crop Year | Total Production | Acres | | Yield |
|---|---|---|---|---|
| | | | | |
| | | | | |
| | | | | |
| | | | | |
| 2013 | 14,400.0 | 120.0 | A | 120 |
| 2014 | 24,300.0 | 180.0 | A | 135 |
| 2015 | 22,500.0 | 150.0 | A | 150 |
| 2016 | | 0 | Z | |
| 2017 | 18,850.0 | 130.0 | A | 145 |
| 2018 | | 0 | Z | |
| Average Yield: | Total: | | | 550 |
| | Approved APH Yield: | | | 138 |
| Preliminary Yield: 138 | Rate Yield: | | | |
| | Prior Year Yield: | | | 138 |
| T-Yield: 80 | Other: | | | |
| Yield Indicator: | | | | |

SAMPLE

## E. Examples of Completed APH Databases-Assigned Yield

A carryover insured who had planted acres failed to provide a production report for the prior crop year. An assigned yield is used for the previous crop year to update the APH database.

<table>
<tr><td colspan="3">Insured's Name and Address:<br><br>I.M. Insured<br>Street<br>State, Zip<br><br>Phone Number: (XXX) XXX-XXXX<br><br>Identification Number: XXX-XX-XXXX</td><td colspan="3">Required Field Review: (check one)<br>Yes □ No □<br>Required Inspection: (check one)<br>Yes □ No □<br>AIP Name and Address:<br><br>I.M. Company<br>Street<br>State, Zip</td><td colspan="4">Agent Name and Address:<br><br>I.M. Agent<br>Street<br>State, Zip<br><br>Phone Number: (XXX) XXX-XXXX<br><br>Agent Code: XXXXXX</td></tr>
<tr><td colspan="3">Policy Number: XX-XXX-XXXX</td><td colspan="3">State: Insured State (XX)</td><td colspan="4">County: Insured County (XXX)</td></tr>
<tr><td colspan="3">Practice: NI (003)</td><td colspan="3">Type: GR (029)</td><td colspan="4"></td></tr>
<tr><td>Irr. Practice:</td><td>Cropping Practice:</td><td>Organic Practice:</td><td>Interval:</td><td>Commodity Type:</td><td>Class:</td><td>Sub-class:</td><td>Intended use:</td></tr>
<tr><td></td><td></td><td></td><td></td><td></td><td></td><td></td><td></td></tr>
<tr><td colspan="3">Crop Year: 2019</td><td>Crop Year</td><td>Total Production</td><td>Acres</td><td colspan="2">Yield</td></tr>
<tr><td colspan="3" rowspan="2">Crop: Corn (0041)</td><td></td><td></td><td></td><td colspan="2"></td></tr>
<tr><td></td><td></td><td></td><td colspan="2"></td></tr>
<tr><td colspan="3" rowspan="3">Unit Number:<br>0001-0001 OU</td><td></td><td></td><td></td><td colspan="2"></td></tr>
<tr><td></td><td></td><td></td><td colspan="2"></td></tr>
<tr><td></td><td></td><td></td><td colspan="2"></td></tr>
<tr><td colspan="3" rowspan="2">Others sharing in crop:</td><td>2014</td><td>11,500.0</td><td>100.0</td><td colspan="2">A115</td></tr>
<tr><td>2015</td><td>13,200.0</td><td>120.0</td><td colspan="2">A110</td></tr>
<tr><td colspan="3" rowspan="4">Land Description:<br>Section: XX<br>Township: XXXX<br>Range: XXXX<br>Other Land Identifier:</td><td>2016</td><td>8,651.0</td><td>105.5</td><td colspan="2">A82</td></tr>
<tr><td>2017</td><td>9,102.0</td><td>111.0</td><td colspan="2">A82</td></tr>
<tr><td>2018</td><td></td><td>100.0</td><td colspan="2">P77</td></tr>
<tr><td>Average Yield:</td><td colspan="2">Total:</td><td colspan="2">466</td></tr>
<tr><td colspan="3" rowspan="3">FSA Farm: XXXX<br>Tract: XXXXX<br>Field Number: XX</td><td rowspan="2">Preliminary Yield: 93</td><td colspan="2">Approved APH Yield:</td><td colspan="2">93</td></tr>
<tr><td colspan="2">Rate Yield:</td><td colspan="2"></td></tr>
<tr><td>T-Yield: 80</td><td colspan="2">Prior Year Yield:</td><td colspan="2">103</td></tr>
<tr><td colspan="3"></td><td>Yield Indicator:</td><td colspan="4">Other:</td></tr>
</table>

SAMPLE

## F. Examples of Completed APH Databases-Certified Organic

A carryover insured begins producing the crop organically on certified organic acreage. Although the insured has produced and insured the crop for three years, this is the first time the crop has been grown organically on this acreage.

| | | | | | | | | |
|---|---|---|---|---|---|---|---|---|
| Insured's Name and Address:<br><br>I.M. Insured<br>Street<br>State, Zip<br><br>Phone Number: (XXX) XXX-XXXX<br><br>Identification Number: XXX-XX-XXXX | | | Required Field Review: (check one)<br>Yes □ No □<br>Required Inspection: (check one)<br>Yes □ No □<br>AIP Name and Address:<br><br>I.M. Company<br>Street<br>State, Zip | | | Agent Name and Address:<br><br>I.M. Agent<br>Street<br>State, Zip<br><br>Phone Number: (XXX) XXX-XXXX<br><br>Agent Code: XXXXXX | | |
| Policy Number: XX-XXX-XXXX | | | State: Insured State (XX) | | | County: Insured County (XXX) | | |
| Practice: NI Certified Organic (713) | | | Type: GR (029) | | | | | |
| Irr. Practice: | Cropping Practice: | Organic Practice: | Interval: | Commodity Type: | Class: | Sub-class: | Intended use: | |
| | | | | | | | | |
| Crop Year: 2019 | | | Crop Year | Total Production | Acres | Yield | | |
| Crop: Corn (0041) | | | | | | | | |
| | | | | | | | | |
| Unit Number: 0001-0001 OU | | | | | | | | |
| | | | | | | | | |
| | | | | | | | | |
| Others sharing in crop: | | | | | | | | |
| | | | 2015 | | | T80 | | |
| Land Description: | | | 2016 | | | T80 | | |
| Section: XX | | | 2017 | | | T80 | | |
| Township: XXXX | | | 2018 | | | T80 | | |
| Range: XXXX | | | Average Yield: 80 | Total: | | 320 | | |
| Other Land Identifier: | | | | Approved APH Yield: | | 80 | | |
| FSA Farm: XXXX | | | Preliminary Yield: | Rate Yield: | | 80 | | |
| Tract: XXXXX | | | | Prior Year Yield: | | | | |
| Field Number: XX | | | T-Yield: 80 | Other: | | | | |
| | | | Yield Indicator: | | | | | |

As the certified organic history is accumulated, the AIP will remove the variable T-Yield(s) from the Certified Organic APH database.

SAMPLE

## G. Examples of Completed APH Databases-Category C Crops

A carryover insured certifies prior crop year's production.

| Insured's Name and Address: | Required Field Review: (check one) | Agent Name and Address: |
|---|---|---|
| | Yes □ No □ | |
| I.M. Insured<br>Street<br>State, Zip | Required Inspection: (check one)<br>Yes □ No □ | I.M. Agent<br>Street<br>State, Zip |
| Phone Number: (XXX) XXX-XXXX | AIP Name and Address:<br>I.M. Company<br>Street<br>State, Zip | Phone Number: (XXX) XXX-XXXX |
| Identification Number: XXX-XX-XXXX | | Agent Code: XXXXXX |
| Policy Number: XX-XXX-XXXX | State: Insured State (XX) | County: Insured County (XXX) |

| Practice: IRR (002) | | | Type: | | | | |
|---|---|---|---|---|---|---|---|
| Irr. Practice: | Cropping Practice: | Organic Practice: | Interval: | Type: | Class: | Sub-class: | Intended use: |
| | | | | | | | |

| Crop Year: 2019 | Crop Year | Total Production | Acres | Yield |
|---|---|---|---|---|
| Crop: Almonds (0028) | | | | |
| Unit Number: 0001-0001 OU | 2012 | 92,500 | 50.5 | A1832 |
| | 2013 | 95,000 | 50.5 | A1881 |
| Others sharing in crop: | 2014 | 97,500 | 50.5 | A1931 |
| | 2015 | 100,000 | 50.5 | A1980 |
| Land Description: | 2016 | 103,125 | 60.0 | A1719 |
| Section: XX | 2017 | 97,900 | 60.0 | A1632 |
| Township: XXXX | 2018 | 86,250 | 60.0 | A1438 |
| Range: XXXX | Average Yield: 1773 | Total: | | 12413 |
| Other Land Identifier: | | Approved APH Yield: | | 1773 |
| FSA Farm: XXXX | Preliminary Yield: 1773 | Rate Yield: | | |
| Tract: XXXXX | | Prior Year Yield: | | 1830 |
| Field Number: XX | T-Yield: | Other: | | |
| | Yield Indicator: | | | |

SAMPLE

## H. Yield Determinations-Converting an Existing Practice to a New Practice

For the previous (policy) year, a single APH database for FAC practice contained actual or assigned yields. The current T-Yield for NI is 17. For this example the NI FAC database is converted to the new practice.

| **2018** UNIT 0001-0000BU | | | NI FAC |
|---|---|---|---|
| YEAR | PROD | ACRES | YIELD |
| 2012 | | | |
| 2013 | 2,200 | 55.0 | A40 |
| 2014 | | 0.0 | Z |
| 2015 | | 40.5 | P12 |
| 2016 | 2,520 | 60.0 | A42 |
| 2017 | 1,210 | 50.0 | A24 |

**Resulting APH Database**

| **2019** | UNIT 0001-0000BU | | | NI |
|---|---|---|---|---|
| YEAR | PROD | ACRES | YIELD | STEP |
| 2012 | | | | STEP 3 |
| 2013 | 2,200 | 55.0 | A40 | STEP 2 |
| 2014 | | 0.0 | Z | STEP 2 |
| 2015 | | 40.5 | P12 | STEP 2 |
| 2016 | 2,520 | 60.0 | A42 | STEP 2 |
| 2017 | 1,210 | 50.0 | A24 | STEP 2 |
| 2018 | 5,760 | 120.0 | A48 | STEP 1 |
| | | TOTAL | 166/5=33 | STEP 4 |
| | | APH | 33 | |

## I. Yield Determinations—Combining Two Practices into a New Practice

The following example illustrates combining NI FAC and NI NFAC APH databases containing actual yields into a single NI APH database. The APH databases below are considered the previous (policy) year's APH databases.

| 2018 | UNIT 0001-0000BU | | NI FAC |
|---|---|---|---|
| YEAR | PROD | ACRES | YIELD |
| 2013 | | | T13 |
| 2014 | | | T13 |
| 2015 | 1,200 | 60.0 | A20 |
| 2016 | | 0.0 | Z |
| 2017 | 880 | 40.0 | A22 |

| 2018 | UNIT 0001-0000BU | | NI NFAC |
|---|---|---|---|
| YEAR | PROD | ACRES | YIELD |
| 2013 | | | |
| 2014 | | | T17 |
| 2015 | 2,880 | 90.0 | A32 |
| 2016 | 1,680 | 60.0 | A28 |
| 2017 | 1,920 | 80.0 | A24 |

Steps for combining APH databases:

| STEP | ACTION |
|---|---|
| **1** | The current production report (2019) indicates for the 2018 crop year: NI NFAC practice with 3000 bu. production, 100.0 actual acres and a 30 bu. average yield. |
| **2** | Actual acres and production are combined. |

| YEAR | | | | | | | | | |
|---|---|---|---|---|---|---|---|---|---|
| | **4080** | | | | **150.0** | | | | |
| 2015 | (1200[FAC] | + | 2880[NFAC]) | / | (60.0[FAC] | + | 90.0[NFAC]) | = | **27** |
| | **1680** | | | | **60.0** | | | | |
| 2016 | (0[FAC] | + | 1680[NFAC]) | / | (0.0[FAC] | + | 60.0[NFAC]) | = | **28** |
| | **2800** | | | | **120.0** | | | | |
| 2017 | (880[FAC] | + | 1920[NFAC]) | / | (40.0[FAC] | + | 80.0[NFAC]) | = | **23** |

## I. Yield Determinations—Combining Two Practices into a New Practice (Continued)

**2019 Non-Irrigated Database (0001-0000BU)**

| STEP | YEAR | PROD. | ACRES | YIELD |
|---|---|---|---|---|
| STEP 2 | 2015 | 4,080 | 150.0 | A27 |
| STEP 2 | 2016 | 1,680 | 60.0 | A28 |
| STEP 2 | 2017 | 2,800 | 120.0 | A23 |
| **STEP 1** | **2018** | **3,000** | **100.0** | **A30** |
| STEP 3 | | | TOTAL | 108/4=27 |
| | | | APH | 27 |

## J Yield Determinations-Dividing a Practice into Two Practices Using Apportionment

The NI yield has been divided into SF and CC practices. The insured apportioned production using the Multi-Purpose Production and Yield Worksheet by CC and SF practice, which was previously reported as NI. Current crop year production reports were also submitted for CC and SF practices.

**Original APH Database**

| **2018** | **UNIT 0001-0000BU** | | **NI** |
|---|---|---|---|
| YEAR | PROD. | ACRES | YIELD |
| 2012 | 8,800 | 200.0 | A44 |
| 2013 | | 0.0 | Z |
| 2014 | | 100.0 | P32 |
| 2015 | 10,080 | 210.0 | A48 |
| 2016 | 8,000 | 200.0 | A40 |
| 2017 | 4,800 | 240.0 | A20 |

**Multi-Purpose Production and Yield Worksheet**

| YEAR | 1 | 2 | 3 | 4 | 5 | 6 |
|---|---|---|---|---|---|---|
| 2012 | SF | 40 | 80.0 | 3200 | 1.25 | 50 |
| 2012 | CC | 32 | 120.0 | 3840 | 1.25 | 40 |
| 2015 | SF | 40 | 100.0 | 4000 | 1.34 | 54 |
| 2015 | CC | 32 | 110.0 | 3520 | 1.34 | 43 |
| 2016 | SF | 40 | 60.0 | 2400 | 1.16 | 46 |
| 2016 | CC | 32 | 140.0 | 4480 | 1.16 | 37 |
| 2017 | SF | 40 | 140.0 | 5600 | 0.55 | 22 |
| 2017 | CC | 32 | 100.0 | 3200 | 0.55 | 18 |

## J. …Dividing a Practice into Two Practices Using Apportionment (Continued)

### Resulting APH Databases

| 2019 | UNIT 0001-0000BU | | | SF |
|---|---|---|---|---|
| YEAR | PROD | ACRES | YIELD | STEP |
| 2012 | 4,000 | 80.0 | A50 | STEP 2 |
| 2013 | | 0.0 | Z | STEP 2 |
| 2014 | | 100.0 | P32 | STEP 2 |
| 2015 | 5,400 | 100.0 | A54 | STEP 2 |
| 2016 | 2,760 | 60.0 | A46 | STEP 2 |
| 2017 | 3,080 | 140.0 | A22 | STEP 2 |
| 2018 | **4,400** | **80.0** | **A55** | **STEP 1** |
| | | TOTAL | 259/6=43 | STEP 4 |
| | | APH | 43 | |

| 2019 | UNIT 0001-0000BU | | | CC |
|---|---|---|---|---|
| YEAR | PROD | ACRES | YIELD | STEP |
| 2012 | 4,800 | 120.0 | A40 | STEP 2 |
| 2013 | | 0.0 | Z | STEP 2 |
| 2014 | | 0.0 | Z | STEP 2 |
| 2015 | 4,730 | 110.0 | A43 | STEP 2 |
| 2016 | 5,180 | 140.0 | A37 | STEP 2 |
| 2017 | 1,800 | 100.0 | A18 | STEP 2 |
| 2018 | | **0.0** | **Z** | **STEP 1** |
| | | TOTAL | 138/4=35 | STEP 4 |
| | | APH | 35 | |

## K. Yield Determinations-Dividing a Practice into Two Practices Using Attribution

In this example, the NI practice has been divided into SF and CC practices. The insured did not re-certify production that was previously reported as non-irrigated. The Multi-Purpose Production and Yield Worksheet cannot be used to apportion production because the insured did not have separate records of acres by practice.

Current production reports were submitted for SF and CC practices for the most recent year. If acceptable records had not been submitted for the 2018 crop year, the assigned yield would have been used.

**Original APH Database**

| **2018** | **UNIT 0001-0000BU** | | **NI** |
|---|---|---|---|
| YEAR | PROD. | ACRES | YIELD |
| 2012 | 11,600 | 200.0 | A58 |
| 2013 | 4,800 | 100.0 | A48 |
| 2014 | 2,900 | 100.0 | A29 |
| 2015 | 4,200 | 210.0 | A20 |
| 2016 | 3,000 | 200.0 | A15 |
| 2017 | 1,200 | 240.0 | A5 |

The SF practice is considered to be the higher yield practice, therefore, the SF APH database is established using the actual acres and production. The CC APH database is established using the percentage relationship between the T-Yield for the CC practice and T-Yield for the SF practice. The resulting relationship is used as a percentage of the SF approved APH yield to calculate the Determined Yield (F). For example, CC T-Yield = 32 and SF T-Yield = 40. Therefore, 32/40=.80 and the SF approved yield of 29 x .80 = F23.

## K. …Dividing a Practice into Two Practices Using Attribution (Continued)

**Resulting APH Databases**

| **2019** | **UNIT 0001-0000BU** | | **SF** | |
|---|---|---|---|---|
| YEAR | PROD | ACRES | YIELD | STEP |
| 2012 | 11,600 | 200.0 | A58 | STEP 2 |
| 2013 | 4,800 | 100.0 | A48 | STEP 2 |
| 2014 | 2,900 | 100.0 | A29 | STEP 2 |
| 2015 | 4,200 | 210.0 | A20 | STEP 2 |
| 2016 | 3,000 | 200.0 | A15 | STEP 2 |
| 2017 | 1,200 | 240.0 | A5 | STEP 2 |
| **2018** | | **0.0** | **Z** | STEP1 |
| | | TOTAL | 175/6=29 | STEP 4 |
| | | APH | 29 | |

| **2019** | **UNIT 0001-0000BU** | | | **CC** |
|---|---|---|---|---|
| YEAR | PROD | ACRES | YIELD | STEP |
| | | | | |
| | | | | |
| | | | | |
| 2015 | | | F 23 | STEP 3 |
| 2016 | | | F 23 | STEP 3 |
| 2017 | | | F 23 | STEP 3 |
| **2018** | 800 | 100.0 | A8 | STEP 1 |
| | | TOTAL | 77/4=19 | STEP 4 |
| | | APH | 19 | |

## L. Yield Determinations-Dividing a Practice into Two Practices Using Recertification

In this example, the NI practice has been divided into SF and CC practices. The insured had added this land as a separate OU in 2016 with a SA T-yield of 29. The insured re-certified production that was previously reported as NI. Current production reports were submitted for SF and CC practices for the most recent year. The insured's calculated SA T-Yield for 2019 for SF is 25 and for CC is 20. If acceptable records had not been submitted for the 2018 crop year, the assigned yield would have been used.

**Original APH Database**

| **2018** | **UNIT 0001-0000BU** | | **NI** |
|---|---|---|---|
| YEAR | PROD | ACRES | YIELD |
| 2014 | | | L29 |
| 2015 | | | L29 |
| 2016 | 8,000 | 200.0 | A15 |
| 2017 | 4,800 | 240.0 | A5 |

## L. …Dividing a Practice into Two Practices Using Recertification (continued)

**Resulting APH Databases**

| 2019 | UNIT 0001-0000BU SF | | | |
|---|---|---|---|---|
| YEAR | PROD | ACRES | YIELD | STEP |
| 2014 | | | L25 | STEP 3 |
| 2015 | | | L25 | STEP 3 |
| 2016 | 8000 | 200.0 | A15 | STEP 2 |
| 2017 | | 0.0 | Z | STEP 2 |
| **2018** | **3750** | **125** | **A30** | STEP1 |
| | | TOTAL | 95/4=24 | STEP 4 |
| | | APH | 24 | |

| 2019 | UNIT 0001-0000BU | | CC | |
|---|---|---|---|---|
| YEAR | PROD | ACRES | YIELD | STEP |
| | | | | |
| 2015 | | | L20 | STEP 3 |
| 2016 | | | L20 | STEP 3 |
| 2017 | 4800 | 240.0 | A5 | STEP 3 |
| **2018** | **2500** | **100.0** | **A25** | STEP 1 |
| | | TOTAL | 70/4= 18 | STEP 4 |
| | | APH | 18 | |

## M. Yield Determinations-Dividing APH Databases by Recertification

Scenario 1-3 illustrate how to divide a non-irrigated (NI) database containing NI Following Another Crop (FAC) and NI Not Following Another Crop (NFAC) into two separate databases by practice (NI FAC and NI NFAC).

## M. Yield Determinations-Dividing APH Databases by Recertification (Continued)

**Scenario 1**: Production is certified/re-certified - Insured has records of acreage and production by practice.

| 2018 | SOYBEANS - 003 NI UNIT 0001-0000BU | | |
|---|---|---|---|
| YEAR | PROD | ACRES | YIELD |
| 2014 | | | N45 |
| 2015 | | | N45 |
| 2016 | 3500 | 92.0 | A38 |
| 2017 | 3000 | 50.0 | A60 |
| T-YLD 50 | | APH 47 | |

| 2019 | SOYBEANS – 053 NI NFAC UNIT 0001-0000BU | | |
|---|---|---|---|
| YEAR | PROD | ACRES | YIELD |
| 2015 | | | T50 |
| 2016 | 2260 | 52.0 | A43 |
| 2017 | 2000 | 30.0 | A67 |
| 2018 | 2800 | 50.0 | A56 |
| T-YLD 50 | | APH 54 | |

| 2019 | SOYBEANS – 043 NI FAC UNIT 0001-0000BU | | |
|---|---|---|---|
| YEAR | PROD | ACRES | YIELD |
| 2015 | | | T30 |
| 2016 | 1240 | 40.0 | A31 |
| 2017 | 1000 | 20.0 | A50 |
| 2018 | 1680 | 35.0 | A48 |
| T-YLD 30 | | APH 40 | |

Insured reported both practices together according to previous actuarial structure for 2017 and prior years, had records of acreage and production by practice for the new actuarial structure. 2018 production was certified according to the new actuarial structure.

The databases must have at least four yields to calculate the APH yield. If the database contains less than 4 yields, a percentage of the applicable transitional yield (T-Yield) is used to provide four yields.

The percent of T used is determined on a crop/county basis and is based on the number of actual/assigned yields:

- 1 year, 80 percent of applicable T-Yield (E);
- 2 years, 90 percent of applicable T-Yield (N); and
- 3 years, 100 percent of applicable T-Yield (T).

In the example, the T-Yield for NI NFAC remained unchanged at 50 and the T-Yield for NI FAC was changed to 30, since the insured has three actual yields 100 percent of the applicable T-Yield is used to provide the fourth yield for both the NI FAC and NI NFAC databases.

## M. Yield Determinations-Dividing APH Databases by Recertification (Continued)

**Scenario 2:** Production is certified/re-certified - Insured has records of acreage and production by practice.

| **2018** | **SOYBEANS – 003 NI UNIT 0001-0000BU** | | |
|---|---|---|---|
| YEAR | PROD | ACRES | YIELD |
| 2014 | | | E40 |
| 2015 | | | E40 |
| 2016 | | | E40 |
| 2017 | 3,000 | 50.0 | A60 |
| T-YLD 50 | | APH 45 | |

In this example the insured has two years of actual yields and 90 percent of the applicable T-Yield is used.

| **2019** | **SOYBEANS – 053 NI NFAC UNIT 0001-0000BU** | | |
|---|---|---|---|
| YEAR | PROD | ACRES | YIELD |
| 2015 | | | N45 |
| 2016 | | | N45 |
| 2017 | 2,000 | 30.0 | A67 |
| 2018 | 2,800 | 50.0 | A56 |
| T-YLD 50 | | APH 53 | |

| **2019** | **SOYBEANS – 043 NI FAC UNIT 0001-0000BU** | | |
|---|---|---|---|
| YEAR | PROD | ACRES | YIELD |
| 2015 | | | N27 |
| 2016 | | | N27 |
| 2017 | 1,000 | 20.0 | A50 |
| 2018 | 1,680 | 35.0 | A48 |
| T-YLD 30 | | APH 38 | |

## M. Yield Determinations-Dividing APH Databases by Recertification (Continued)

**Scenario 3:** Production is certified/re-certified - Insured has records of acreage and production by practice.

| **2018** | **SOYBEANS – 003 NI UNIT 0001-0000BU** | | |
|---|---|---|---|
| YEAR | PROD | ACRES | YIELD |
| 2013 | | | N45 |
| 2014 | | | N45 |
| 2015 | 4,400 | 80.0 | A55 |
| 2016 | | 0.0 | Z |
| 2017 | 3,000 | 50.0 | A60 |
| T-YLD 50 | | APH 51 | |

| **2019** | **SOYBEANS – 053 NI NFAC UNIT 0001-0000BU** | | |
|---|---|---|---|
| YEAR | PROD | ACRES | YIELD |
| 2014 | | | T50 |
| 2015 | 3,500 | 60.0 | A58 |
| 2016 | | 0.0 | Z |
| 2017 | 3,000 | 50.0 | A60 |
| 2018 | 2,800 | 50.0 | A56 |
| T-YLD 50 | | APH 56 | |

| **2019** | **SOYBEANS – 043 NI FAC UNIT 0001-0000BU** | | |
|---|---|---|---|
| YEAR | PROD | ACRES | YIELD |
| 2013 | | | T30 |
| 2014 | | | T30 |
| 2015 | 900 | 20.0 | A45 |
| 2016 | | 0.0 | Z |
| 2017 | | 0.0 | Z |
| 2018 | 1,680 | 35.0 | A48 |
| T-YLD 30 | | APH 38 | |

In this example the insured did not have any soybeans planted on this unit in 2016 and in 2017 all the beans planted were NI NFAC.

The insured still gets 100 percent of the applicable T-Yield for the NI FAC database, because the number of actual/assigned yields is determined on a crop/county basis.

## N. Yield Determinations-Dividing APH Databases by Apportioning Commingled Production

The following scenarios illustrate how to divide a non-irrigated (NI) database containing NI NFAC and NI FAC into two separate databases using the Multi-Purpose Production and Yield Worksheet. If current year's production is not certified, the Multi-Purpose Production and Yield Worksheet can be used to separate the production by practice.

**Scenario 1:** Apportion production - Insured has records of acreage by practice and total production, but does not know the amount of production by practice.

| 2018 | SOYBEANS – 003 NI UNIT 0001-0000BU | | |
|---|---|---|---|
| YEAR | PROD | ACRES | YIELD |
| 2014 | | | N45 |
| 2015 | | | N45 |
| 2016 | 3,500 | 92.0 | A38 |
| 2017 | 3,000 | 50.0 | A60 |
| T-YLD 50 | | APH 47 | |

Insured has reported production from both practices together according to previous actuarial structure. The insured has records of the acreage by practice and total production, but does not know the amount production by practice.

Insured will have to set up the databases according to the new actuarial structure apportioning production using the Multi-purpose Production and Yield Worksheet. In the example the T-Yield for NI NFAC remained unchanged at 50 and the T-Yield for NI FAC is 30.

| MULTI-PURPOSE PRODUCTION AND YIELD WORKSHEET | | | | | | |
|---|---|---|---|---|---|---|
| CROP YEAR | 1 | 2 | 3 | 4 | 5 | 6 |
| | PRACTICE | ACRES | T-YIELD | YIELD EXTENSION | FACTOR | YIELD |
| 2016 | NFAC | 52 | 50 | 2,600 | 0.92 | 46 |
| | FAC | 40 | 30 | 1,200 | | 28 |
| 2017 | NFAC | 30 | 50 | 1,500 | 1.43 | 72 |
| | FAC | 20 | 30 | 600 | | 43 |
| 2018 | NFAC | 50 | 50 | 2,500 | 1.26 | 63 |
| | FAC | 35 | 30 | 1,050 | | 38 |

Insured did not keep 2018 production separate according to new actuarial structure and used the Multi-purpose Production and Yield Worksheet to separate 2018 production. For this example, the insured planted 50 acres NI NFAC and 35 acres NI FAC with total production of 4,480.

## N. …Dividing APH Databases by Apportioning Commingled Production (Continued)

**FOR EXAMPLE: CROP YEAR 2016 CALCULATIONS**

| | | | | | | |
|---|---|---|---|---|---|---|
| COLUMN 1 | – | Practice | | | | |
| COLUMN 2 | – | Transitional Yield for the applicable practice (NI NFAC 50 and NI FAC 30) | | | | |
| COLUMN 3 | – | Planted acres for the applicable practice (NI NFAC 52 and NI FAC 40 | | | | |
| COLUMN 4 | – | Yield Extension is Col. 2 x Col. 3 (NI NFAC 50 x 52 = 2600 NI FAC 30 x 40 = 1200) | | | | |
| COLUMN 5 | – | Factor (total commingled production) | ÷ | (total yield extensions in Col. 4) | (3,500 ÷ 3,800) = | 0.92* |
| COLUMN 6 | – | Yield is Col. 3 x Col. 5. (NI NFAC – 50 x 0.92 = 46 NI FAC – 30 x 0.92 = 28) | | | | |

*Values rounded to nearest hundredth

## N. …Dividing APH Databases by Apportioning Commingled Production (Continued)

| **2018** | **SOYBEANS – 003 NI UNIT 0001-0000BU** | | |
|---|---|---|---|
| YEAR | PROD | ACRES | YIELD |
| 2014 | | | N45 |
| 2015 | | | N45 |
| 2016 | 3500 | 92.0 | A38 |
| 2017 | 3000 | 50.0 | A60 |
| T-YLD 50 | | APH 47 | |

The yield by practice from Col. 6 on Multi-purpose Production and Yield Worksheet is used to create two separate databases (NI NFAC and NI FAC) according to the new actuarial structure.

Since the insured has three actual yields, 100 percent of the applicable T-Yield is used to provide the fourth yield.

| **2019** | **SOYBEANS – 053 NI NFAC UNIT 0001-0000BU** | | |
|---|---|---|---|
| YEAR | PROD | ACRES | YIELD |
| 2015 | | | T50 |
| 2016 | 2392 | 52.0 | A46 |
| 2017 | 2160 | 30.0 | A72 |
| 2018 | 3150 | 50.0 | A63 |
| T-YLD 50 | | APH 58 | |

This example used the same original database as example 1 in the previous certification/re-certification section. Since the production was apportioned according to practice the APH by practice is different.

The APH for NI NFAC changed from 54 to 58 and the APH for NI FAC changed from 40 to 35. Note that the total production after apportioning the production may not equal the total commingled production due to rounding.

| **2019** | **SOYBEANS – 043 NI FAC UNIT 0001-0000BU** | | |
|---|---|---|---|
| YEAR | PROD | ACRES | YIELD |
| 2015 | | | T30 |
| 2016 | 1120 | 40.0 | A28 |
| 2017 | 860 | 20.0 | A43 |
| 2018 | 1330 | 35.0 | A38 |
| T-YLD 30 | | APH 35 | |

## N. …Dividing APH Databases by Apportioning Commingled Production (Continued)

**Scenario 2:** Apportion production - Insured has records of acreage by practice and total production, but does not have production records by practice.

| **2018** | **SOYBEANS – 003 NI UNIT 0001-0000BU** | | |
|---|---|---|---|
| YEAR | PROD | ACRES | YIELD |
| 2014 | | | E40 |
| 2015 | | | E40 |
| 2016 | | | E40 |
| 2017 | 3000 | 50.0 | A60 |
| T-YLD 50 | | APH 45 | |

In this example the insured has two years of actual yields and 90 percent of the applicable T-Yield is used.

| **2019** | **SOYBEANS – 043 NI FAC UNIT 0001-0000BU** | | |
|---|---|---|---|
| YEAR | PROD | ACRES | YIELD |
| 2015 | | | N27 |
| 2016 | | | N27 |
| 2017 | 860 | 20.0 | A43 |
| 2018 | 1330 | 35.0 | A38 |
| T-YLD 30 | | APH 34 | |

| **2019** | **SOYBEANS – 053 NI NFAC UNIT 0001-0000BU** | | |
|---|---|---|---|
| YEAR | PROD. | ACRES | YIELD |
| 2015 | | | N45 |
| 2016 | | | N45 |
| 2017 | 2160 | 30.0 | A72 |
| 2018 | 3150 | 50.0 | A63 |
| T-YLD 50 | | APH 56 | |

**MULTI-PURPOSE PRODUCTION AND YIELD WORKSHEET**

| | COL. 1 | COL. 2 | COL. 3 | COL. 4 | COL. 5 | COL. 6 |
|---|---|---|---|---|---|---|
| CROP YEAR | PRACTICE | ACRES | T-YIELD | YIELD EXTENSION | FACTOR | YIELD |
| 2017 | NFAC | 30.0 | 50 | 1500 | 1.43 | 72 |
| | FAC | 20.0 | 30 | 600 | | 43 |
| 2016 | NFAC | 50.0 | 50 | 2500 | 1.26 | 63 |
| | FAC | 35.0 | 30 | 1050 | | 38 |

## N. …Dividing APH Databases by Apportioning Commingled Production (Continued)

**Scenario 3:** Apportion production - Insured has records of acreage by practice and total production, but does not have production records by practice.

| **2018** | **SOYBEANS – 003 NI UNIT 0001-0000BU** | | |
|---|---|---|---|
| YEAR | PROD | ACRES | YIELD |
| 2013 | | | N45 |
| 2014 | | | N45 |
| 2015 | 4400 | 80.0 | A55 |
| 2016 | | 0.0 | Z |
| 2017 | 3000 | 50.0 | A60 |
| T-YLD 50 | | APH 51 | |

In this example the insured has three years of actual yields and 100 percent of the applicable T-Yield is used.

In this example the insured did not have any soybeans planted on this unit in 2016, and in 2017 all the soybeans planted were NI NFAC.

| **2019** | **SOYBEANS – 053 NI NFAC UNIT 0001-0000BU** | | |
|---|---|---|---|
| YEAR | PROD | ACRES | YIELD |
| 2014 | | | T50 |
| 2015 | 3,660 | 60.0 | A61 |
| 2016 | | 0.0 | Z |
| 2017 | 3,000 | 50.0 | A60 |
| 2018 | 3,150 | 50.0 | A63 |
| T-YLD 50 | | APH 59 | |

| **2019** | **SOYBEANS – 043 NI FAC UNIT 0001-0000BU** | | |
|---|---|---|---|
| YEAR | PROD | ACRES | YIELD |
| 2013 | | | T30 |
| 2014 | | | T30 |
| 2015 | 740 | 20.0 | A37 |
| 2016 | | 0.0 | Z |
| 2017 | | 0.0 | Z |
| 2018 | 1,330 | 35.0 | A38 |
| T-YLD 30 | | APH 34 | |

| **MULTI-PURPOSE PRODUCTION AND YIELD WORKSHEET** | | | | | | |
|---|---|---|---|---|---|---|
| CROP YEAR | 1 PRACTICE | 2 ACRES | 3 T-YIELD | 4 YIELD EXTENSION | 5 FACTOR | 6 YIELD |
| 2015 | NFAC | 60.0 | 50 | 3.000 | 1.22 | 61 |
| | FAC | 20.0 | 30 | 600 | | 37 |
| 2018 | NFAC | 50.0 | 50 | 2,500 | 1.26 | 63 |
| | FAC | 35.0 | 30 | 1,050 | | 38 |

**Exception:** On any unit for any year, if only one P/T/TMA was planted on the unit, that unit's actual acres and production may be re-certified without regard to instructions for apportioning or attributing the acreage and production for other units for that year.

## O. Yield Determinations-Dividing APH Databases by Attributing Acres and Production

The following example illustrates how to divide a non-irrigated (NI) database containing NI NFAC and NI FAC into two separate databases when acres and production are attributed.

**Scenario 1:** Attribute acres and production - insured does not have separate records of acres by practice. Insured knows total production, but does not have records for acres planted to each practice.

| **2018** | **SOYBEANS – 003 NI UNIT 0001-0000BU** | | |
|---|---|---|---|
| YEAR | PROD | ACRES | YIELD |
| 2014 | | | N45 |
| 2015 | | | N45 |
| 2016 | 3,500 | 92.0 | A38 |
| 2017 | 3,000 | 50.0 | A60 |
| T-YLD 50 | | APH 47 | |

When acres and production have to be attributed, all the acres and production are charged to the practice with the higher T-Yield. In this example all acres and production in the NI – 003 database is charged to the new NI NFAC - 053 database.

The NI FAC database - 043 is established using the percentage relationship between the T-Yield for the NI FAC practice and the T-Yield for the NI NFAC practice. The resulting relationship is used as a percentage of the NI NFAC approved APH yield to calculate the Determined Yield (F) for the FAC database.

| **2019** | **SOYBEANS – 053 NI NFAC UNIT 0001-0000BU** | | |
|---|---|---|---|
| YEAR | PROD | ACRES | YIELD |
| 2015 | | | T50 |
| 2016 | 3,500 | 92.0 | A38 |
| 2017 | 3,000 | 50.0 | A60 |
| 2018 | 2,800 | 50.0 | A56 |
| T-YLD 50 | | APH 51 | |

For this example the T-Yield for the NI NFAC practice is 45 and the T-Yield for the NI FAC practice is 30. The insured certified 2018 production according to new actuarial structure and was unable to apportion 2017 production.

The Determined Yield is calculated by dividing the T-Yield of the lower practice by the T-Yield of the higher practice and multiplying the result by the approved APH yield of the higher practice. The determined yield cannot exceed the lower of the lower of the T-Yield or determined yield.

| **2019** | **SOYBEANS – 043 NI FAC UNIT 0001-0000BU** | | |
|---|---|---|---|
| YEAR | PROD | ACRES | YIELD |
| 2015 | | | F30 |
| 2016 | | | F30 |
| 2017 | | | F30 |
| 2018 | 1,680 | 35.0 | A48 |
| T-YLD 30 | | APH 33 | |

e.g., NI NFAC T-Yield = 50, NI FAC T-Yield = 30, and NI NFAC APH yield = 47. Therefore, 30 ÷ 50 = 0.60 and the NI NFAC approved APH yield of 51 x 0.6 = 31.

## P. Yield Determinations-Dividing APH Databases Using All 3 Methods

The following example illustrates how to divide a non-irrigated (NI) database containing NI Following Another Crop (FAC) and NI Not Following Another Crop (NFAC) into two separate databases by practice (NI NFAC and NI FAC) using all three methods to separate prior production and acreage history.

| 2018 | SOYBEANS – 003 NI UNIT 0001-0000BU | | |
|---|---|---|---|
| YEAR | PROD | ACRES | YIELD |
| 2009 | 5,630 | 92.0 | A61 |
| 2010 | 2,450 | 38.0 | A64 |
| 2011 | 1,600 | 46.0 | A35 |
| 2012 | 2,500 | 58.0 | A43 |
| 2013 | 750 | 75.0 | A10 |
| 2014 | 6,500 | 110.0 | A59 |
| 2015 | 4,400 | 80.0 | A55 |
| 2016 | | 0.0 | Z |
| 2017 | 3,000 | 50.0 | A60 |
| T-YLD 50 | | APH 48 | |

| 2019 | SOYBEANS – 053 NI NFAC UNIT 0001-0000BU | | |
|---|---|---|---|
| YEAR | PROD | ACRES | YIELD |
| 2009 | 5,630 | 92.0 | A61 |
| 2010 | 2,450 | 38.0 | A64 |
| 2011 | 1,600 | 46.0 | A35 |
| 2012 | 1,920 | 40.0 | A48 |
| 2013 | 234 | 18.0 | A13 |
| 2014 | 6,500 | 110.0 | A59 |
| 2015 | 3,835 | 65.0 | A59 |
| 2016 | | 0.0 | Z |
| 2017 | 1,600 | 24.0 | A67 |
| 2018 | 2,800 | 50.0 | A56 |
| T-YLD 50 | | APH 51 | |

| 2019 | SOYBEANS – 043 NI FAC UNIT 0001-0000BU | | |
|---|---|---|---|
| YEAR | PROD | ACRES | YIELD |
| 2009 | | 0.0 | Z |
| 2010 | | 0.0 | Z |
| 2011 | | 0.0 | Z |
| 2012 | 594 | 18.0 | A33 |
| 2013 | 513 | 57.0 | A 9 |
| 2014 | | 0.0 | Z |
| 2015 | 615 | 15.0 | A41 |
| 2016 | | 0.0 | Z |
| 2017 | 1,400 | 26.0 | A54 |
| 2018 | 1,680 | 35.0 | A48 |
| T-YLD 35 | | APH 37 | |

| MULTI-PURPOSE PRODUCTION AND YIELD WORKSHEET | | | | | | |
|---|---|---|---|---|---|---|
| CROP YEAR | 1 PRACTICE | 2 ACRES | 3 T-YIELD | 4 YIELD EXTENSION | 5 FACTOR | 6 YIELD |
| 2012 | NFAC | 40.0 | 50 | 2,000 | 0.95 | 48 |
| | FAC | 18.0 | 35 | 630 | | 33 |
| 2013 | NFAC | 18.0 | 50 | 900 | 0.26 | 13 |
| | FAC | 57.0 | 35 | 1,995 | | 9 |
| 2015 | NFAC | 65.0 | 50 | 3,250 | 1.17 | 59 |
| | FAC | 15.0 | 35 | 525 | | 41 |

**P. Yield Determinations-Dividing APH Databases Using All 3 Methods …(Continued)**

(1) The insured must separate all prior production and acreage history according to the new actuarial structure using one of the three following methods: production records certified/re-certified, production apportioned, or acres and production attributed in the order listed.

Only one of the three methods below may be elected within a crop year for the crop/county and the selected method applies across all units by P/T/V/TMA for that crop year. Exception: On any unit for any year, if only one P/T/V/TMA was planted on the unit, that unit's actual acres and production may be re-certified without regard to instructions for apportioning or attributing the acreage and production for other units for that year.

(2) The insured had records of acreage and production by practice for crop years 2017 and 2018. The production and acres for crop year 2014 was also certified/re-certified, because the insured did not have any FAC soybeans planted on that unit in 2014.

(3) The insured has records of acreage by practice and total production, but does not know the amount of production by practice for crop years 2012, 2013, and 2015.

(4) For crop years 2009-2011 the insured does not have separate records of acres by practice. Insured knows total production, but does not know how many acres were planted to each practice.

The production for crop years 2009-2011 are attributed to the NI NFAC database. Since the NI FAC database already contains at least four actual/assigned yields, the NI FAC APH is calculated using those yields. If the NI FAC database did not contain four actual/assigned yields, then the Determined Yield (F) would be entered to provide four yields.

## Q. Yield Determinations-Dividing an Added Land APH Database

(1) This example illustrates how to divide a database with added land according to the new actuarial structure (NI NFAC and NI FAC). The insured had the following OUs 0001-0001OU, 0001-0002OU, and 0001-0003OU. Unit 0001-0003OU is an added land unit (added in 2017).

| 2018 | Soybeans – 003 NI UNIT 0001-0001OU | | |
|---|---|---|---|
| YEAR | PROD | ACRES | YIELD |
| 2014 | 4210 | 84.0 | A50 |
| 2015 | 3220 | 70.0 | A46 |
| 2016 | 3000 | 50.0 | A60 |
| 2017 | 5200 | 100.0 | A52 |
| T-YIELD 50 | | APH 52 | |

| 2018 | Soybeans – 003 NI UNIT 0001-0002OU | | |
|---|---|---|---|
| YEAR | PROD | ACRES | YIELD |
| 2014 | 1410 | 33.0 | A43 |
| 2015 | 2744 | 56.0 | A49 |
| 2016 | 3276 | 63.0 | A52 |
| 2017 | 3976 | 71.0 | A56 |
| T-YIELD 50 | | APH 50 | |

| 2018 | Soybeans – 003 NI UNIT 0001-0003OU | | |
|---|---|---|---|
| YEAR | PROD | ACRES | YIELD |
| 2014 | | | L51 |
| 2015 | | | L51 |
| 2016 | | | L51 |
| 2017 | 7625 | 125.0 | A61 |
| T-YIELD 50 | | APH 54 | |

(2) To establish unit 0001-0003OU according to the new actuarial structure, a new SA T-Yield must be calculated for NI NFAC and NI FAC. The first step is to establish APH databases according to the new actuarial structure.

For this example, the insured certified/re-certified all prior production and acres to establish the NI NFAC and NI FAC APH databases for units 0001-0001OU, 0001-0002OU, and 0001-0003OU. If an APH database contains SA T-Yields, the applicable T-Yield will replace the SA T-Yields before calculating the approved APH yield.

## Q. Yield Determinations-Dividing an Added Land APH Database (Continued)

| 2018 | SOYBEANS – 003 NI UNIT 0001-0001OU | | |
|---|---|---|---|
| YEAR | PROD | ACRES | YIELD |
| 2014 | 4210 | 84.0 | A50 |
| 2015 | 3220 | 70.0 | A46 |
| 2016 | 3000 | 50.0 | A60 |
| 2017 | 5200 | 100.0 | A52 |
| T-YIELD 50 | | APH 52 | |

| 2019 | SOYBEANS – 053 NI FAC UNIT 0001-0001OU | | |
|---|---|---|---|
| YEAR | PROD | ACRES | YIELD |
| 2014 | 3472 | 62.0 | A56 |
| 2015 | 2912 | 56.0 | A52 |
| 2016 | 2640 | 40.0 | A66 |
| 2017 | 3965 | 65.0 | A61 |
| 2018 | 3150 | 50.0 | A63 |
| T-YIELD 50 | | APH 60 | |

| 2019 | SOYBEANS - 043 NI FAC UNIT 0001-0001OU | | |
|---|---|---|---|
| YEAR | PROD | ACRES | YIELD |
| 2014 | 738 | 22.0 | A34 |
| 2015 | 308 | 14.0 | A22 |
| 2016 | 360 | 10.0 | A36 |
| 2017 | 1235 | 35.0 | A35 |
| 2018 | 1323 | 35.0 | A38 |
| T-YIELD 30 | | APH 33 | |

| 2018 | SOYBEANS – 003 NI UNIT 0001-0002OU | | |
|---|---|---|---|
| YEAR | PROD | ACRES | YIELD |
| 2014 | 1410 | 33.0 | A43 |
| 2015 | 2744 | 56.0 | A49 |
| 2016 | 3276 | 63.0 | A52 |
| 2017 | 3976 | 71.0 | A56 |
| T-YIELD 50 | | APH 50 | |

| 2019 | SOYBEANS – 053 NI NFAC UNIT 0001-0002OU | | |
|---|---|---|---|
| YEAR | PROD | ACRES | YIELD |
| 2014 | 940 | 20.0 | A47 |
| 2015 | 2242 | 38.0 | A59 |
| 2016 | 2394 | 42.0 | A57 |
| 2017 | 2542 | 41.0 | A62 |
| 2018 | 2800 | 50.0 | A56 |
| T-YIELD 50 | | APH 56 | |

| 2019 | SOYBEANS - 043 NI FAC UNIT 0001-0002OU | | |
|---|---|---|---|
| YEAR | PROD | ACRES | YIELD |
| 2014 | 470 | 13.0 | A36 |
| 2015 | 502 | 18.0 | A28 |
| 2016 | 882 | 21.0 | A42 |
| 2017 | 1434 | 30.0 | A48 |
| 2018 | 1680 | 35.0 | A48 |
| T-YIELD 30 | | APH 40 | |

## Q. Yield Determinations-Dividing an Added Land APH Database (Continued)

(3) If SA T-Yields were applicable in the prior year and there are less than four years of actual and assigned yields for the APH database, recalculate the SA T-Yields according to the new actuarial structure using the simple average of approved yields for all APH databases by P/T/TMA and enter the recalculated SA T-Yield in the yield column of the APH database to establish a 4-year database.

| 2018 | SOYBEANS – 003 NI UNIT 0001-0003OU | | |
|---|---|---|---|
| YEAR | PROD. | ACRES | YIELD |
| 2014 | | | L51 |
| 2015 | | | L51 |
| 2016 | | | L51 |
| 2017 | 7625 | 125.0 | A61 |
| T-YIELD 50 | | APH 54 | |

| 2019 | SOYBEANS – 053 NI FAC UNIT 0001-0003OU | | |
|---|---|---|---|
| YEAR | YEAR | ACRES | YIELD |
| 2015 | | | T50 |
| 2016 | | | T50 |
| 2017 | 6110 | 94.0 | A65 |
| 2018 | 3000 | 50.0 | A60 |
| T-YIELD 50 | | APH 56 | |

| 2019 | SOYBEANS - 043 NI FAC UNIT 0001-0003OU | | |
|---|---|---|---|
| | PROD. | ACRES | YIELD |
| 2015 | | | T30 |
| 2016 | | | T30 |
| 2017 | 1515 | 31.0 | A49 |
| 2018 | 3500 | 92.0 | A38 |
| T-YIELD 30 | | APH 37 | |

**Calculation of New SA T-Yields by practice for Unit 0001-0003OU**

The SA T-Yield for the NI NFAC practice is calculated by averaging the approved NI NFAC APH yield of units 0001-0001OU, 0001-0002OU, and 0001-0003OU.

| UNIT | NI NFAC APH |
|---|---|
| 0001-0001OU | 60 |
| 0001-0002OU | 55 |
| 0001-0003OU | 56 |

NI NFAC SA T-Yield Calculation for Unit 0001-0003OU

(60 + 55 + 56) ÷ 3 = 57

| 2019 | SOYBEANS – 053 NI NFAC UNIT 0001-0003OU | | |
|---|---|---|---|
| YEAR | PROD. | ACRES | YIELD |
| 2015 | | | L57 |
| 2016 | | | L57 |
| 2017 | 6110 | 94.0 | A65 |
| 2018 | 3000 | 50.0 | A60 |
| T-YIELD 50 | | APH 60 | |

## Q. Yield Determinations-Dividing an Added Land APH Database (Continued)

**Calculation of New SA T-Yields by practice for Unit 0001-0003OU Cont'd**

The SA T-Yield for the NI FAC practice is calculated by averaging the approved NI FAC APH yield of units 0001-0001OU, 0001-0002OU, and 0001-0003OU.

| UNIT | NI FAC APH |
|---|---|
| 0001-0001OU | 33 |
| 0001-0002OU | 40 |
| 0001-0003OU | 37 |

NI NFAC SA T-Yield Calculation for Unit 0001-0004OU

(33 + 40 + 37) ÷ 3 = 37

| **2019** | **SOYBEANS – 053 NI NFAC UNIT 0001-0003OU** | | |
|---|---|---|---|
| YEAR | PROD. | ACRES | YIELD |
| 2015 | | | L37 |
| 2016 | | | L37 |
| 2017 | 1515 | 31.0 | A49 |
| 2018 | 3500 | 92.0 | A38 |
| T-YIELD 30 | | APH 40 | |

## R. Dividing an APH Database when a Type is Divided into More than Two Types

**Scenario:** RMA divides the existing barley (Type 997) into five types: all others (872), malting (873), waxy hulled (874), waxy hulless (875), and hulless (876). Historically, the insured has produced three non-irrigated types of barley: all others, malting, and hulless. Therefore, the insured must separate prior year's history in the barley APH database to reflect the new type structure in the actuarial documents.

**2018 APH Database (original APH database)**

| **2018** | CROP: BARLEY (0091) | | |
|---|---|---|---|
| UNIT # 0001-0001OU | PRACTICE: NI (003) | | |
| | TYPE: NO TYPE SPECIFIED (997) | | |
| YEAR | PRODUCTION | ACRES | YIELD |
| 2008 | 7200 | 120 | A 60 |
| 2009 | 6000 | 150 | A 40 |
| 2010 | 5435 | 140 | A 39 |
| 2011 | 9000 | 150 | A 60 |
| 2012 | 3108 | 42 | A 74 |
| 2013 | 5270 | 85 | A 62 |
| 2014 | 2066 | 30 | A 69 |
| 2015 | 404 | 117 | A 3 |
| 2016 | 966 | 10 | A 97 |
| 2017 | 4940 | 76 | A 65 |
| | | | 569/10 |
| T-YIELD 45 | APPROVED APH | | 57 |

## R. Dividing an APH Database … into More than Two Types (Continued)

For APH crop years 2014-2017, the insured has separate production records of the three types of barley and will be able to re-certify the barley production by type.

**Note:** 2015 was a loss year and the loss records must be used in re-certification process). In the years 2011-2013 the insured does not have separate production records for the three types of barley, but the insured has the acreage of the three types of barley grown.

For those years, the insured will apportion the barley production by using the Multi-Purpose Production and Yield Worksheet see Para. 1715 and Exhibit 17. For years 2009-2011, the insured does not have separate production records or acreage records. For those years, the insured will attribute the barley production to the type that normally has the highest yield (i.e., highest T-Yield or if T-Yields are the same, the highest yielding type designated by RMA). The steps used to separate prior year's history in the barley APH database are illustrated in (1), (2), and (3) below.

(1) Recertification: For APH crop years 2014-2017, the insured has separate production records for the three types of barley and will be able to re-certify the barley production by type.

**Note:** 2015 was a loss year and the loss records must be used in re-certification process.

Para. 1523 provides instructions to re-certify production. Remarks concerning these steps are provided below:

| STEP | ACTION |
|---|---|
| **1** | Add the production from the acceptable production report filed for the current crop year (enter the assigned yield if carryover insureds acceptable production reports are not filed). |
| **2** | Enter the certified/re-certified production, acres, actual yields, and assigned yields (for carryover insureds) into the resulting APH databases for crop year 2014-2018. |
| **3** | Would not apply because other production history is available that could be apportioned or attributed. Also, Simple Average T – Yields (SA T-Yields) were not applicable in the prior year in this example. If they were, and there were less than four years of actual and assigned yields for the database, SA T-Yields would be recalculated and used to establish a 4-year APH database. |
| **4** | Will not apply as there is remaining production to be separated. |

## R. Dividing an APH Database … into More than Two Types (Continued)

**After Re-Certification**

| 2019 | CROP: BARLEY (0091) | | |
|---|---|---|---|
| UNIT # 0001-0001OU | PRACTICE: NI (003) | | |
| | TYPE: **ALL OTHERS (872)** | | |
| YEAR | PROD | ACRES | YIELD |
| 2014 | 0 | 0 | Z |
| 2015 | 404 | 105 | A 4 |
| 2016 | 0 | 0 | Z |
| 2017 | 2720 | 40 | A 68 |
| 2018 | 5520 | 80 | A 69 |
| T-YIELD 45 | | | |

| 2019 | CROP: BARLEY (0091) | | |
|---|---|---|---|
| UNIT # 0001-0001OU | PRACTICE: NI (003) | | |
| | TYPE: **MALTING (873)** | | |
| YEAR | PROD | ACRES | YIELD |
| 2014 | 2066 | 30 | A 69 |
| 2015 | 0 | 0 | Z |
| 2016 | 966 | 10 | A 97 |
| 2017 | 2220 | 36 | A 62 |
| 2018 | 2090 | 35 | A 60 |
| T-YIELD 45 | | | |

| 2019 | CROP: BARLEY (0091) | | |
|---|---|---|---|
| UNIT # 0001-0001OU | PRACTICE: NI (003) | | |
| | TYPE: **HULLESS (876)** | | |
| YEAR | PROD | ACRES | YIELD |
| 2014 | 0 | 0 | Z |
| 2015 | 0 | 12 | A 0 |
| 2016 | 0 | 0 | Z |
| 2017 | 0 | 0 | Z |
| 2018 | 1134 | 14.8 | A 77 |
| T-YIELD 35 | | | |

(2) Apportionment: Para. 1523 provides instructions to apportion production, requiring the use of the Multi-Purpose Production and Yield Worksheet. See Exh.17. Remarks concerning these steps are provided below. In this example, production for years 2014-2017 have been re-certified and the insured only has the acreage by type for years 2011-2013, therefore production will be apportioned by type.

| STEP | ACTION |
|---|---|
| **1** | Was completed prior to re-certification of production for years 2014-2017. |
| **2** | Enter the acres, apportioned production and yields, and assigned yields (for carryover insureds) in the database. See the completed Multi-Purpose Production and Yield Worksheet. |
| **3** | Would not apply at this point because other production history is available that could be attributed. Additionally, the insured has more than 4-years of production history. |
| **4** | Will not apply as there is remaining production to be separated. |

COLUMN 1 – Type
COLUMN 2 – Planted Acres
COLUMN 3 – Transitional Yield
COLUMN 4 – Yield Extension (Col. 2 x Col. 3)
COLUMN 5 – Factor (total commingled production ÷ total yield extensions in Col. 4)
COLUMN 6 – Yield (Col. 3 x Col. 5)

## R. Dividing an APH Database … into More than Two Types (Continued)

**Multi-Purpose Production and Yield Worksheet**

| | COL.1 | COL. 2 | COL. 3 | COL. 4 | COL. 5 | COL. 6 |
|---|---|---|---|---|---|---|
| CROP YEAR | TYPE | PLANTED ACRES | TRANSITIONAL YIELD | YIELD EXTENSION | FACTOR | YIELD |
| 2011 | ALL OTHERS | 50 | 45 | 2250 | 1.44 | 65 |
| 2011 | MALTING | 50 | 45 | 2250 | 1.44 | 65 |
| 2011 | HULLESS | 50 | 35 | 1750 | 1.44 | 50 |
| 2012* | ALL OTHERS | 30 | 45 | | | 74 |
| 2012* | MALTING | 12 | 45 | | | 74 |
| 2012* | HULLESS | 0 | 35 | | | 0 |
| 2013 | ALL OTHERS | 30 | 45 | 1350 | 1.47 | 66 |
| 2013 | MALTING | 30 | 45 | 1350 | 1.47 | 66 |
| 2013 | HULLESS | 25 | 35 | 875 | 1.47 | 51 |

**After Re-certification and Apportionment**

| **2019** | CROP: BARLEY (0091) | | |
|---|---|---|---|
| UNIT # 0001-0001OU | PRACTICE: NI (003) | | |
| | TYPE: **ALL OTHERS (872)** | | |
| YEAR | PROD | ACRES | YIELD |
| 2011 | 3250 | 50 | A65 |
| 2012 | 2220 | 30 | PA74 |
| 2013 | 1980 | 30 | A66 |
| 2014 | 0 | 0 | Z |
| 2015 | 404 | 105 | A4 |
| 2016 | 0 | 0 | Z |
| 2017 | 2720 | 40 | A68 |
| 2018 | 5520 | 80 | A69 |
| T-YIELD 45 | | | |

| **2019** | CROP: BARLEY (0091) | | |
|---|---|---|---|
| UNIT # 0001-0001OU | PRACTICE: NI (003) | | |
| | TYPE: **MALTING (873)** | | |
| YEAR | PROD | ACRES | YIELD |
| 2011 | 3250 | 50 | A65 |
| 2012 | 888 | 12 | PA74 |
| 2013 | 1980 | 30 | A66 |
| 2014 | 2066 | 30 | A69 |
| 2015 | 0 | 0 | Z |
| 2016 | 966 | 10 | A97 |
| 2017 | 2220 | 36 | A62 |
| 2018 | 2090 | 35 | A60 |
| T-YIELD 45 | | | |

| **2019** | CROP: BARLEY (0091) | | |
|---|---|---|---|
| UNIT # 0001-0001OU | PRACTICE: NI (003) | | |
| | TYPE: **HULLESS (876)** | | |
| YEAR | PROD | ACRES | YIELD |
| 2011 | 2500 | 50 | A50 |
| 2012 | 0 | 0 | Z |
| 2013 | 1275 | 25 | A 51 |
| 2014 | 0 | 0 | Z |
| 2015 | 0 | 12 | A 0 |
| 2016 | 0 | 0 | Z |
| 2017 | 0 | 0 | Z |
| 2018 | 1134 | 14.8 | A 77 |
| T-YIELD 35 | | | |

* For 2012, the production is prorated to the planted acres of each applicable type since all of the barley production was from types with the same T-Yield see Para. 1523. When production is prorated, the yield is identified by the yield descriptor PA (Example PA74).

## R. Dividing an APH Database … into More than Two Types (Continued)

(3) Attribution: Para. 1523 provides instructions to attribute production to the type with the highest T-Yield or if the T-Yields are the same, to the highest yielding type designated by RMA. In this example, production for years 2014-2017 has been re-certified and production for years 2011-2013 has been apportioned by type.

Therefore, production for years 2009-2010 must be attributed to the highest yielding type. For this example, RMA has designated the all others type as the highest yielding type. For years 2009-2010; the insured only planted these types, the all others (872) and hulless (876). Remarks concerning these steps are provided below:

(a) For the higher yielding type:

| STEP | ACTION |
|---|---|
| **1** | Was completed prior to re-certification of production for years 2014-2016. |
| **2** | Enter the production, acres, actual yields and assigned yields in the APH database. |
| **3** | Would not apply because insured has more than 4-years of production history. |
| **4** | Calculate the approved APH yield according to applicable Category B procedure for the higher yielding type. Cups will not apply because original APH database was divided. |

(b) For the lower yielding type(s):

| STEP | ACTION |
|---|---|
| **1** | Was completed prior to re-certification of production for years 2014-2017. |
| **2** | Divide the lower yielding type(s) T-Yield for each type by the highest yielding type T-Yield to calculate a percentage factor. A percentage factor would need to be calculated for each lower yielding type, if the lower yielding type(s) were produced in prior years. For example, hulless T-Yield of 35 (lower yielding) divided by the all others T-Yield of 45 (highest yielding type):<br><br>35/45= .78 (rounded to two places) or 78 percent. |
| **3** | Apply the percentage factor calculated in Step 2 to the approved yield for the highest yielding type to calculate the Determined Yield for the lower yielding type. A Determined Yield would need to be calculated for each lower yielding type, if the lower yielding types were produced in prior years. For example, the insured's approved APH yield for the all others type is 53.<br><br>Although the Determined Yield for hulless (41 = 53 x .78) is higher than the T-Yield (35), an APH database cannot be updated with a Determined Yield greater than the T-Yield. In this case, the APH database is updated with the T-Yield and identified with the F yield descriptor. If the calculated Determined Yield is equal to or less than the T-Yield, the APH database is updated with the Determined Yield and identified with the F yield descriptor. |
| **4** | Calculate the approved APH yield following the applicable Category B procedure. |

## R. Dividing an APH Database … into More than Two Types (Continued)

**After Re-certification, Apportionment, and Attribution**

| **2019** | Crop: Barley (0091) | | | **2019** | Crop: Barley (0091) | | | **2019** | Crop: Barley (0091) | | |
|---|---|---|---|---|---|---|---|---|---|---|---|
| UNIT # 0001-0001OU | Practice: NI (003) Type: **All others (872)** | | | UNIT # 0001-0001OU | Practice: NI (003) Type: **Malting (873)** | | | UNIT # 0001-0001OU | Practice: NI (003) Type: **Hulless (876)** | | |
| YEAR | PROD | ACRES | YIELD | YEAR | PROD | ACRES | YIELD | YEAR | PROD | ACRES | YIELD |
| 2009 | 6000 | 150 | A40 | 2009 | 0 | 0 | Z | 2009 | 0 | 0 | Z |
| 2010 | 5435 | 140 | A39 | 2010 | 0 | 0 | Z | 2010 | 0 | 0 | Z |
| 2011 | 3240 | 50 | A65 | 2011 | 3240 | 50 | A65 | 2011 | 2520 | 50 | A50 |
| 2012 | 2220 | 30 | PA74 | 2012 | 888 | 12 | PA74 | 2012 | 0 | 0 | Z |
| 2013 | 1980 | 30 | A66 | 2013 | 1980 | 30 | A66 | 2013 | 1275 | 25 | A51 |
| 2014 | 0 | 0 | Z | 2014 | 2066 | 30 | A69 | 2014 | 0 | 0 | Z |
| 2015 | 404 | 105 | A4 | 2015 | 0 | 0 | Z | 2015 | 0 | 12 | A0 |
| 2016 | 0 | 0 | Z | 2016 | 966 | 10 | A97 | 2016 | 0 | 0 | Z |
| 2017 | 2720 | 40 | A68 | 2017 | 2220 | 36 | A62 | 2017 | 0 | 0 | Z |
| 2018 | 5520 | 80 | A69 | 2018 | 2090 | 35 | A60 | 2018 | 1134 | 14.8 | A77 |
| | | | 425/8 | | | | 493/7 | | | | 178/4 |
| T-YLD 45 | Approved APH | | 53 | T-YLD 45 | Approved APH | | 70 | T-YLD 35 | Approved APH | | 45 |

## S. Dividing an APH Database When Only One Type has been Produced

RMA divided one type (997) into five different types. The insured has only produced feed barley on an APH database, which is considered an all other type (872). Therefore, only the type name and code will be changing on the APH database, after the inclusion of the current year's production report, and cups would apply. Re-certification is not required.

**Original APH Database**

| **2018** | CROP: BARLEY (0091) | | |
|---|---|---|---|
| UNIT # 0001-0001OU | PRACTICE: NI (003) | | |
| | TYPE: NO TYPE SPECIFIED (997) | | |
| YEAR | PRODUCTION | ACRES | YIELD |
| 2012 | 7300 | 100 | A 73 |
| 2013 | 10200 | 150 | A 68 |
| 2014 | 12150 | 150 | A 81 |
| 2015 | 2225 | 30 | A 74 |
| 2016 | 7035 | 105 | A 67 |
| 2017 | 2100 | 24.8 | A 85 |
| | | | 448/6 |
| T-YIELD 45 | APPROVED APH | | 75 |

**Resulting APH Database**

| **2019** | CROP: BARLEY (0091) | | |
|---|---|---|---|
| UNIT # 0001-0001OU | PRACTICE: NI (003) | | |
| | TYPE: ALL OTHERS (872) | | |
| YEAR | PRODUCTION | ACRES | YIELD |
| 2012 | 7300 | 100 | A 73 |
| 2013 | 10200 | 150 | A 68 |
| 2014 | 12150 | 150 | A 81 |
| 2015 | 2225 | 30 | A 74 |
| 2016 | 7035 | 105 | A 67 |
| 2017 | 2100 | 24.8 | A 85 |
| 2018 | 938 | 134 | A 7 |
| | | | 455/7 |
| | AVERAGE YIELD: | | 65 |
| | CUPPED YIELD: | | 67 |
| T-YIELD 45 | APPROVED APH: | | 67 |

## T. Retaining 10 Crop Years of APH History

**Example 1:** In 2018, a carryover insured has actual yields for crop years 2008, 2009, 2011, 2012, 2013, 2014, 2016 and 2017. In crop years 2010 and 2015, the insured crop was not planted on acreage contained in this APH database. In 2019, the carryover insured reports an actual yield 90 bushel per acres for crop year 2018. The base period for 2018 crop year is the 10 most recent APH crop years. APH databases are limited to the 10 most recent APH crop years. When the 2018 actual yield is added to the APH database, the oldest Z yield is removed. The carryover insured will have 9 actual yields in the 2019 APH database.

| 2018 APH DATABASE | | | |
|---|---|---|---|
| YEAR | PROD | ACRES | YIELD |
| 2008 | 11250 | 150 | A75 |
| 2009 | 11100 | 150 | A74 |
| 2010 | | 0 | Z |
| 2011 | 8450 | 130 | A65 |
| 2012 | 12150 | 150 | A81 |
| 2013 | 10005 | 145 | A69 |
| 2014 | 10950 | 150 | A73 |
| 2015 | | 0 | Z |
| 2016 | 3750 | 150 | A25 |
| 2017 | 14250 | 150 | A95 |
| APPROVED APH 557/8 = 70 | | | |

| 2019 APH DATABASE | | | |
|---|---|---|---|
| YEAR | PROD | ACRES | YIELD |
| 2008 | 11250 | 150 | A75 |
| 2009 | 10952 | 148 | A74 |
| 2011 | 8450 | 130 | A65 |
| 2012 | 12150 | 150 | A81 |
| 2013 | 10005 | 145 | A69 |
| 2014 | 10950 | 150 | A73 |
| 2015 | | 0 | Z |
| 2016 | 3750 | 150 | A25 |
| 2017 | 14250 | 150 | A95 |
| 2018 | 13320 | 148 | A90 |
| APPROVED APH 647/9 = 72 | | | |

**Example 2:** A carryover insured who has provided actual yields for crop years 2008, 2009, 2011, 2012, 2013, 2014, 2016 and 2017. The base period for 2016 crop year is the 10 most recent APH crop years. Zero acres planted were reported for crop year 2010 and 2015. In 2019, the insured reported zero acres planted for crop year 2018. The 2018 APH database is duplicated for the 2019 APH database with the exception of the yield descriptor "Z" deleted for crop year 2010. The carryover insured has 8 actual yields in the 2019 database.

| 2018 APH DATABASE | | | |
|---|---|---|---|
| YEAR | PROD | ACRES | YIELD |
| 2008 | 11250 | 150 | A75 |
| 2009 | 11100 | 150 | A74 |
| 2010 | | 0 | Z |
| 2011 | 8450 | 130 | A65 |
| 2012 | 12150 | 150 | A81 |
| 2013 | 10005 | 145 | A69 |
| 2014 | 10950 | 150 | A73 |
| 2015 | | 0 | Z |
| 2016 | 3750 | 150 | A25 |
| 2017 | 14250 | 150 | A95 |
| APPROVED APH 557/8 = 70 | | | |

| 2019 APH DATABASE | | | |
|---|---|---|---|
| YEAR | PROD | ACRES | YIELD |
| 2008 | 11250 | 150 | A75 |
| 2009 | 10952 | 148 | A74 |
| 2011 | 8450 | 130 | A65 |
| 2012 | 12150 | 150 | A81 |
| 2013 | 10005 | 145 | A69 |
| 2014 | 10950 | 150 | A73 |
| 2015 | | 0 | Z |
| 2016 | 3750 | 150 | A25 |
| 2017 | 14250 | 150 | A95 |
| 2018 | | 0 | Z |
| APPROVED APH 557/8 = 70 | | | |

## T. Retaining 10 Crop Years of APH History (Continued)

**Example 3:** A carryover insured who has previously provided actual yields for crop years 2008, 2009, 2010, 2011, 2012, 2013, 2014, 2015, 2016, and 2017. The base period for the 2017 crop year is the most recent 10 APH crop years. In 2019, the insured reports zero acres were planted in crop year 2018. The 2018 APH database is duplicated for the 2019 APH database. The carryover insured has 10 actual yields in the 2019 database.

| **2018 APH DATABASE** | | | |
|---|---|---|---|
| YEAR | PROD | ACRES | YIELD |
| 2008 | 11250 | 150 | A75 |
| 2009 | 11100 | 150 | A74 |
| 2010 | 12040 | 140 | A86 |
| 2011 | 8450 | 130 | A65 |
| 2012 | 12150 | 150 | A81 |
| 2013 | 10005 | 145 | A69 |
| 2014 | 10950 | 150 | A73 |
| 2015 | 12040 | 146 | A82 |
| 2016 | 3750 | 150 | A25 |
| 2017 | 14250 | 150 | A95 |
| **APPROVED APH 725/10 = 73** | | | |

| **2019 APH DATABASE** | | | |
|---|---|---|---|
| YEAR | PROD | ACRES | YIELD |
| 2008 | 11250 | 150 | A75 |
| 2009 | 11100 | 150 | A74 |
| 2010 | 12040 | 140 | A86 |
| 2011 | 8450 | 130 | A65 |
| 2012 | 12150 | 150 | A81 |
| 2013 | 10005 | 145 | A69 |
| 2014 | 10950 | 150 | A73 |
| 2015 | 12040 | 146 | A82 |
| 2016 | 3750 | 150 | A25 |
| 2017 | 14250 | 150 | A95 |
| **APPROVED APH 725/10 = 73** | | | |

## U. Dividing Previously Established APH Databases for P/Ts with the Same T-Yield

This example applies only to those crop P/Ts where the T-Yields are the same for both P/Ts and a single APH database was established for both P/Ts (it does not apply when RMA divides a crop P/T).

Insured has previously produced both oil and confectionary sunflowers on the same unit. The T-Yields for both sunflower types were the same, thus both types could use the same APH database. Separate APH databases are required for each type, regardless of whether the T-Yields are the same.

However, an exception to the rule that an APH database for a P/T may not be duplicated to establish an APH database for another P/T is authorized to allow the single APH database for both types to be duplicated to establish an APH database for each type. Production must be reported and maintained separately for each type in subsequent years.

## U. Dividing Previously Established APH Databases for P/Ts with the Same T-Yield (Cont.)

| **2018** | **SUNFLOWERS (0078) NI (003)** | | **UNIT: 0001-0001** | |
|---|---|---|---|---|
| YEAR | PRODUCTION | ACRES | | YIELD |
| 2012 | 127,342 | 113.8 | A | 1119 |
| 2013 | 122,235 | 145.0 | A | 843 |
| 2014 | 88,388 | 88.3 | A | 1001 |
| 2015 | 97,028 | 101.6 | A | 955 |
| 2016 | 92,403 | 85.4 | A | 1082 |
| 2017 | 112,500 | 100.0 | A | 1125 |
| **T-YIELD 950** | | **APH 1021** | | |

| **2019** | Sunflowers (0078) NI (003) ***OIL (048)*** | | Unit: 0001-0001 |
|---|---|---|---|
| Year | Production | Acres | Yield |
| 2012 | 127,342 | 113.8 | DA1119 |
| 2013 | 122,235 | 145.0 | DA843 |
| 2014 | 88,388 | 88.3 | DA1001 |
| 2015 | 97,028 | 101.6 | DA955 |
| 2016 | 92,403 | 85.4 | DA1082 |
| 2017 | 112,500 | 100.0 | DA1125 |
| 2018 | 74,481 | 61.0 | A1221 |
| **T-YIELD 950** | | **APH 1049** | |

| **2019** | Sunflowers (0078) NI (003) ***CONFT (049)*** | | Unit: 0001-0001 |
|---|---|---|---|
| Year | Production | Acres | Yield |
| 2012 | 127,342 | 113.8 | DA1119 |
| 2013 | 122,235 | 145.0 | DA843 |
| 2014 | 88,388 | 88.3 | DA1001 |
| 2015 | 97,028 | 101.6 | DA955 |
| 2016 | 92,403 | 85.4 | DA1082 |
| 2017 | 112,500 | 100.0 | DA1125 |
| 2018 | 53,708 | 45.4 | A1183 |
| **T-YIELD 950** | | **APH 1044** | |

## V. Yield Indicators

Yield indicators are codes that are used to identify the approved APH yield. APH databases must be identified with the applicable yield indicator see Appendix III.

(1) Yield indicators, if applicable, must be shown; otherwise show 000. See the following table for a list of yield indicators and the conditions when they are applicable.

| Yield Indicator | WHEN APPLICABLE |
|---|---|
| **A** | For Category B crops, Added land using SA T-Yields |
| **AL** | For Sugarcane and Tobacco (0236, Type 061 in CT and MA), added land using SA T-Yields |
| **B** | For Category B crops, Added land, using Variable T-Yields due to not being eligible for use of SA T-Yield |
| **BL** | For Sugarcane and Tobacco (0236, Type 061 in CT and MA), added land using variable T-Yields due to not being eligible for use of SA T-Yield |
| **C** | • For Category B crops, Added land using Variable T-Yields due to SA T-Yield lower than variable T-Yield; or<br>• Determined Irrigated Yield for added Irrigated Practice |
| **CL** | For Sugarcane and Tobacco (0236, Type 061 in CT and MA), added land using variable T-Yields due to SA T-Yield being lower than variable T-Yield |
| **CR** | For Category B Crops, used to identify APH databases containing acreage emerging from CRP |
| **F** | For Category B, C, and D crops used to identify APH Databases containing RO Determined Yield. No cup or YA is applicable unless specified by the RO. |
| **L** | For Sugar Cane Lag Year Planted |
| **M** | Master Yield |
| **NB** | For Category B crops, used to identify APH databases containing acreage planted the year after the initial year of new breaking |
| **SB** | For annual crops, primarily Category B crops see Exhibit 17L for applicable crops, used to identify APH databases containing native sod acreage during the first four crop years of planting. |
| **S** | Skip-row planting pattern for all skip-row crops, except Cotton and Corn |
| **W** | For Category C APH crops, when multiple blocks are reported as a unit or as one block that has mixed age and/or density with production reported together.<br><br>When commingled production does not include immature acreage, yield indicators may be eligible for YA or cup see Para. 1856.<br><br>**Note**: When only one T-Yield is shown on the AD, T-Yield indicator "W" is not reported. |

## V. Yield Indicators (Continued)

(2) Special case indicators are provided for specified situations that trigger: 1) RO Determined Yield Requests, 2) adjustments by the AIP by formulas and/or 3) procedures provided in RO UG or the CIH. YA or cup will apply only when authorized by the RO.

| Special Case Yield Indicators | WHEN APPLICABLE |
|---|---|
| **H** | Higher yield than the average is approved for the block or unit. No YA. |
| **R** | Productivity is reduced. No YA. |
| **N** | Non-conventional farming practice is carried out. No YA. |
| **NS** | When a non-conventional farming practice is carried out and is determined to be a sustainable practice. YA may be applicable if authorized by the RO Determined Yield. |
| **I** | Irrigation water supply is not adequate. No YA. |
| **AF** | High variability (Alternate Bearing) of actual yields with adjustment made by the AIP according to the CIH formula. No YA. |
| **D** | Database met high variability (Alternate Bearing or Downward Trending) test as defined by the CIH formula, but RO UG waived adjustment. YA may be applicable if authorized by the RO UG. |
| **DF** | High variability (Downward Trending) of actual yields with adjustment made by the AIP according to the CIH formula. No YA. |
| **F** | Database met high variability (Alternate Bearing or Downward Trending) test defined by the CIH formula, however, the RO UGG modified the high variability testing and subsequent database modification OR the RO provided a RO DY. YA may be applicable if authorized by the RO. |
| **PS** | For Pecan Revenue. Productivity is reduced. No YA. |
| **P** | Change in practice or production methods that result in an increase in approved yield or revenue. Applicable to Category C crops or Pecan Revenue. No YA |
| **PM** | Change in practice or production methods that result in a decrease in approved yield or revenue. Applicable to Category C crops or Pecan Revenue. No YA. |
| **UC** | Crop is underage as specified in the policy or special provision statement(s). No YA. |
| **PB** | Unusual cases submitted to the RO that meet the criteria listed in Para. 1881E. YA may be applicable if authorized by the RO. |
| **M** | Databases that do not meet the required production minimums specified in the policy or special provision statement(s). No YA. |

## W. Yield Descriptors

Refer to Appendix III for the appropriate yield type descriptors and reporting instructions. **Key:**

| | |
|---|---|
| **1** | Eligible for yield substitution. |
| **2** | Counts as a year of records for determining percent of T-Yield or Yield Floor, if applicable. |
| **N/A** | Not eligible for yield substitution or counted as a year of records for percent of T-Yield or Yield Floor determinations. |
| ***** | If insured elects yield adjustments, use applicable yield descriptor (AY, GY, VY, NA, NV, NG, RY, NR) to indicate if yield should not be substituted. |

(1) Actual Yield Descriptor

| Actual Yield Descriptor | Applicable Condition(s) (1, 2 or N/A) | WHEN APPLICABLE |
|---|---|---|
| **A** | 1, 2 | Actual yield, (Example: A120). |
| **AY** | 2 | Actual yields less than 60 percent of the T-Yield that do not qualify for yield substitutions, (Example: AY20). |
| **BF** | 1, 2 | Actual yield transferred from another person under BFR procedures, (Example BF100). |
| **FA** | 1, 2 | Actual yield from undamaged acres when part of the acreage in the APH database is damaged due to UUF or a third party, (Example FA110). |
| **NA** | 2 | Conventional and sustainable practice actual yields less than 60% of the T-Yield that qualify for yield adjustment and the insured did not elect the adjustment for a specific crop year(s), (Example: NA30). |

## W. Yield Descriptors (Continued)

(2) Prorated Yield Descriptor

| Prorated Yield Descriptor | Applicable Condition(s) (1, 2 or N/A) | WHEN APPLICABLE |
|---|---|---|
| **PA*** | 1, 2 | Actual yield developed from prorated (or apportioned) actual production (Example: PA75). |
| **PR*** | 1, 2 | Actual or Summarized Actual Yield taken from the previous year's Master Yield Summary that was replicated to a new county's database that was developed from prorated actual production, (Example: PR75). |
| **DA*** | 1. 2 | Actual yield developed from duplicated actual production, see Para. 1505 and Exhibit 15 (Example: DA75). |

(3) Assigned Yield Descriptor

| Assigned Yield Descriptor | Applicable Condition(s) (1, 2 or N/A) | WHEN APPLICABLE |
|---|---|---|
| **B** | N/A | Pecan, assigned value using the lowest available dollar span shown on the actuarial documents (Example: B299). |
| **P** | 2 | Assigned yield, (Example: P75). |

## W. Yield Descriptors (Continued)

(4) PP Assigned Yield Descriptor

| PP Assigned Yield Descriptor | Applicable Condition(s) (1, 2 or N/A) | WHEN APPLICABLE |
|---|---|---|
| **PP** | N/A | A yield assigned when PP payments are limited to 35% of the PP coverage and the unit/P/T/V contains only PP acreage of the first insured crop (Example: PP60). |

(5) Special Yield Descriptor

| Special Yield Descriptor | Applicable Condition(s) (1, 2 or N/A) | WHEN APPLICABLE |
|---|---|---|
| **C** | N/A | A special yield entered in the database (Example: C105):<br>• If the crop was grown prior to enrollment in CRP and acceptable production records are not provided.<br>• New databases for new crop/P/T/TMAs using SA T-Yields or using variable T-Yields for forage production.<br>• For Determined Irrigated Yields. |
| **F** | N/A<br>(For all other crops)<br><br>2 ( peanuts and tobacco) | RMA RO Determined Yields.<br>• Used when less than four years of actual and/or assigned yields are available for a database and the T-Yield is specifically assigned and designated by the RMA RO, or high-risk T-Yields (also applicable to unrated land when high-risk T-Yields are assigned by written agreement) are used in the approved APH Yield calculation.<br>• For Texas Citrus Fruit, RMA RO appraised yields (when entered into the databases and used to calculate the approved APH yield) will be considered RMA RO Determined Yields.<br>• For peanuts and tobacco, classification yields used to establish approved APH yields. (Example: F100). |
| **FD** | 2 | Used for acreage damaged by UUF or a third party, see Para. 1310H, (Example: FD0). |
| **OG** | N/A | Organic determined yield, see Para. 1167A and B (Example: OG75). Only available for 2014 and prior crop years. |
| **OF** | 2 | For organic Cat C perennials. AIP determined yield for acreage in transition to organic, (Example OF35). |
| **Q** | 2 | Used for short rated acreage, see Para. 1304F (Example: Q). |
| **U** | N/A | Uninsured acreage shown to prevent a break in continuity of records. |
| **UG** | 2 | Unharvested acres insured under ARPI. |
| **UR** | N/A | Production report not provided under ARPI. |
| **Z** | N/A | Zero planted acreage. |

## W. Yield Descriptors (Continued)

(6) Weighted Average Yield Descriptor

| Weighted Average Yield Descriptor | Applicable Condition(s) (1, 2 or N/A) | WHEN APPLICABLE |
|---|---|---|
| **NW** | 2 | A weighted average yield assigned when PP payments are limited to 35% of the PP coverage and the unit/P/T/V contains both PP acreage and planted acreage of the first insured crop and it is less than 60% of the T-Yield that qualifies for yield adjustment and the insured did not elect the adjustment for a specific crop year(s), (Example: NW60). |
| **PW** | 1, 2 | A weighted average yield assigned when PP payments are limited to 35% of the PP coverage and the unit/P/T/V contains both PP acreage and planted acreage of the first insured crop, (Example: PW95). |
| **WY** | 2 | A weighted average yield assigned when PP payments are limited to 35% of the PP coverage and the unit/P/T/V contains both PP acreage and planted acreage of the first insured crop and is less than 60% of the T-Yield but does not qualify for yield substitutions, (Example: WY90). |

(7) Reduced/Replaced Yield Descriptor

| Reduced/ Replaced Yield Descriptor | Applicable Condition(s) (1, 2 or N/A) | WHEN APPLICABLE |
|---|---|---|
| **AC** | 2 | For Category C APH crops, used to identify commingled production where separate acres are available to separate production using different T-Yields by P/T/V/TMA or other characteristics. |
| **AX** | 1, 2 | Used to identify excessive yields that were replaced by the simple average of all actual and assigned yields for the same crop year for the same P/T/V/TMA or other characteristics (Example: AX100). |
| **EX** | 2 | For Category C crops, used to identify 80% T-Yields used instead of actual yields. This descriptor takes precedence over any other applicable yield descriptor. (Example: One actual/assigned yield = EX80). |
| **IX** | 2 | For Category C crops, used to identify 100% T-Yield. This descriptor is used instead of actual yields and takes precedence over any other applicable yield descriptor, (Example: Three actual/assigned yields = IX100). |
| **NX** | 2 | For Category C crops, used to identify 90% T-Yield used instead of actual yields. This descriptor takes precedence over any other applicable yield descriptor, (Example: Two actual/assigned yields = NX90). |
| **SX** | N/A | For Category C crops, used to identify 65% T-Yields used instead of actual yields for crops without production minimums. This descriptor takes precedence over any other applicable yield descriptor. (Example: No actual/assigned yields = SX65). |
| **TX** | 2 | Used to identify excessive yields that were replaced by the applicable county T-Yield, or lowest available dollar span for pecan revenue, if insured has no other applicable actual/assigned yields for the same crop year for the same P/T/V/TMA or other characteristics (Example: TX100). |

## W. Yield Descriptors (Continued)

(8) Summed Yield Descriptor

| Summed Yield Descriptor | Applicable Condition(s) (1, 2 or N/A) | WHEN APPLICABLE |
|---|---|---|
| **NR** | 2 | Actual or Summarized Actual Yield taken from the previous year's Master Yield Summary that was replicated to a new county's database less than 60% of the T-Yield that qualify for yield adjustment and the insured did not elect the adjustment for a specific crop year(s), (Example: NR100). |
| **R** | 1, 2 | Actual or Summarized Actual Yield taken from the previous year's Master Yield Summary that was replicated to a new county's database. |
| **RY** | 2 | Actual or Summarized Actual Yield taken from the previous year's Master Yield Summary that was replicated to a new county's database to identify yields less than 60% of the T-Yield that do not qualify for yield substitutions, (Example: RY100). |

(9) T-Yield Descriptor

| T- Yield Descriptor | Applicable Condition(s) (1, 2 or N/A) | When Applicable |
|---|---|---|
| **E** | N/A | 80% T-Yield, (Example: One actual/assigned yield = E80). |
| **EK** | N/A | For Category C crops, used to identify if adjusted for percent stand prior to adjustment for 80% T-Yield, (Example: EK80). |
| **G** | N/A | For certified organic, a T-Yield based on an actual yield from transitional acreage, (Example: G110). G yield descriptors should only appear in 2016 prior crop years within a current year's APH database. |
| **I** | N/A | Initial yield for new producer of the crop in the county, (Example: I100). |
| **IL** | N/A | 100% T-Yield or SA T-Yield, used to identify initial databases for added land for new producers, see Part 17 Section 9 for additional instructions, (Example: IL100). |
| **L** | N/A | SA T-Yield for added land, (Example: L103). |
| **N** | N/A | 90% T-Yield, (Example: Two actual/assigned yields = N90). |
| **NK** | N/A | For Category C crops, used to identify if adjusted for percent stand prior to adjustment for 90% T-Yield, (Example: NK90). |
| **S** | N/A | 65% T-Yield, (Example: No actual/assigned yields = S65). |
| **SK** | N/A | For Category C crops, used to identify if adjusted for percent stand, on crops without minimum production, prior to adjustment for 65% T-Yield, (Example: SK65). |
| **T** | N/A | 100% T-Yield, (Example: Three actual/assigned yields =T100). |
| **TK** | N/A | For Category C crops, used to identify if adjusted for percent stand prior to adjustment for 100% T-Yield, (Example: TK100). |
| **X** | N/A | 80% T-Yield, remaining for feed or forage APH databases qualified in a previous crop year (Example: No actual assigned yields =X80). |

## W. Yield Descriptors (Continued)

(10) Temporary Yield Descriptor

| Temporary Yield Descriptor | Applicable Condition(s) (1, 2 or N/A) | WHEN APPLICABLE |
|---|---|---|
| **J** | 2 | Temporary Yield, (Example: J105). |
| **JJ** | 2 | Temporary Yield for delayed claim, (Example: JJ100). |

## X. APH Yield Floors, Cups, and Substitutions- Carryover Insured with Actual Yields

**Example 1:** The following Corn example assumes a 100-bu. T-Yield through the 2019 crop year for a carryover insured with two years of low actual yields.

(1) For 2018, the insured reported an actual yield of 53 bushels per acre for the 2017 crop year due to hail damage. Yield substitution under the APH Yield Adjustment was not elected. The approved APH yield was calculated by using the actual yield (53 bu.) and three 80 percent T-Yields

A53 + E80 + E80 + E80 = 293 ÷ 4 = **73**

(2) For 2019, the insured reported an actual yield of zero bushels per acre for the previous (2018) crop year. (The corn was flooded out.) Yield substitution under the APH Yield Adjustment is elected. Yield determinations are as follows:

(a) To calculate the average APH yield, the zero actual yield is added to the previous production data and two 90 percent T-Yields (90 bu.) are used to complete the 4-year APH database.

A0 + A53 + N90 + N90 = 233 ÷ 4 = **58**

(b) Sixty percent of the T-Yield is substituted for the two low actual yields and two 90 percent T-Yields are used to calculate the adjusted yield

YA60 +YA60 + N90 + N90 = 300 ÷ 4 = **75**

(c) The YC was elected and the cup is calculated by multiplying the previous year's approved APH yield x .90. Normal rounding rules apply. See GSH Exh. 8 for Rounding Rules.

73 x .90 = **66**

(d) The insured has provided two years of records and is eligible for the 75 percent yield floor.

100 bu. T-Yield x .75 = **75bu**

## X. APH Yield Floors, Cups, and Substitutions - Carryover Insured with Actual Yields (Continued)

(e) Approved APH Yield.

(i) For additional coverage policies, the cupped yield (66 bu.) and the yield floor (75), and the APH Yield Adjustment (75) are compared, the initial year yield substitutions is elected and the YC is elected. The insured may elect to use the yield calculated using yield substitutions under the APH Yield adjustment, the cupped yield or the yield floor (75).

(ii) For CAT policies, the average APH yield (58) and the APH Yield Adjustment (75), if elected, are compared. The approved APH yield is the average APH yield (58 bu.) unless yield substitutions under the APH Yield Adjustment are elected.

**Example 2:** The following Cotton example (solid-planted or irrigated skip-row cotton) assumes a 400-lb T-Yield through the 2019 crop year, for a carryover insured with five years of actual records which reflect three low actual yields.

(1) For crop year 2018, the insured reported actual yields of 600 lbs. (2014 crop year), 245 lbs. (2015 crop year), 0 lbs. (2016 crop year), and 300 lbs. (2017 crop year) per acre.

The average APH yield is 286.

A600 + A245 + A0 + A300 = 1145 ÷ 4 = **286**

Yield substitutions under the APH Yield Adjustment election resulted in an approved APH yield of 346.

A600 + A245 + 240/~~A0~~ + 300 = 1385 ÷ 4 = **346**

(2) For crop year 2019, the insured reported an actual yield of 50 lbs. per acre for the previous crop year (2018). (The cotton was damaged by drought.)

(a) Crop year 2019 average APH yield. The 50-lbs. actual yield was added to the previous data and used to complete the APH database. The average APH yield is 239.

A600 + A245 + A0 + A300 + A50 = 1195 ÷ 5 = **239**.

**X. APH Yield Floors, Cups, and Substitutions- Carryover Insured with Actual Yields (Continued)**

(b) The YC option was elected and the cup is calculated by multiplying the previous year's approved APH yield x .90. Normal rounding rules apply. See GSH Exh. 8 for Rounding Rules.

346 X .90 = 311 lb

(c) Yield Floor. The insured has provided five years of records and is eligible for the 80 percent yield floor, if insured has an additional coverage level policy.

400-lb. T-Yield X .80 = **320 lb**.

(d) APH Yield Adjustment (YA). Sixty percent of the T-Yield is substituted (if elected) for the two low actual yields.

A600 + A245 + 240/~~A0~~ + A300 + 240/~~A50~~ = 1625 ÷ 5 = **325**

(e) Approved APH Yield.

(i) For additional coverage level policies, the yield floor (320 lbs.) and the APH average yield (239) are compared. The insured may elect to use the yield calculated using yield substitutions under the YA (325), cups under the YC (311) or cancel the yield substitution, and use the yield floor (320).

(ii) For CAT policies, the average APH yield (239) and the yield calculated using APH Yield Adjustments (325) are compared. The insured may elect to use the yield calculated using yield substitutions (325).

(3) For Non-Irrigated Cotton planted to a qualifying skip-row pattern, the approved APH yield is calculated on a solid-planted basis; however, the applicable yield conversion factor is applied when determining the approved APH yields for qualifying skip-row patterns.

## Y. APH Yield Floors, Cups, and Substitutions- No Production Records Initially

**Example 3:** A new insured that has produced the insured crop did not provide any production records. The insured is eligible for 65% of T-Yield.

RMA T-Yield is 100.

2014 S65
2015 S65
2016 S65
2017 S65
260/4 = **65**

2018 Approved APH Yield is **65.**

Cups, if elected, do not apply until the insured provides an actual record or the assigned yield provision is applied.

(1) The Carryover Insured Provided 2018 Production History

The insured reports the actual yield for the most recent crop year. It is used to calculate the approved yield.

2015 E80
2016 E80
2017 E80
2018 A95
335/4 = **84**

The average yield is 84; the 2019 crop year Approved APH Yield is **84**.

(2) The Carryover Insured Provided Production Records for the 2017 and 2018 Crop Year

Cups, if elected, do not apply because the insured provided more than the most recent crop year production records.

2015 N90
2016 N90
2017 A40
2018 A95
315/4 = **79**

The 2019 crop year Approved APH Yield is **79**.

## Z. APH Yield Floor, Cups, and Substitutions- Assigned Yield

Continuation of Example 3.

If the carryover insured did not provide any production records for the 2018 crop year, assigned yield provisions apply.

| | |
|---|---|
| 2015 | E80 |
| 2016 | E80 |
| 2017 | E80 |
| 2018 | P49 (65 x 75%) |
| | 289/4 = **72** |

The 2019 crop year Approved APH yield is 72.

## AA. Carryover Insured Provided a Production Report Applicable for the 2019 Crop Year

The prior year's approved APH yield was 97 and was not a yield floor or calculated using yield substitutions.

| | |
|---|---|
| 2014 | A105 |
| 2015 | A80 |
| 2016 | A98 |
| 2017 | A103 |
| 2018 | A0 |
| | 386/5 = **77** |

The average yield is **77**; however, the 2019 crop year Yield is CUPPED AT **87** (97 x 90%), if YC is elected.

## BB. Yield Adjustment Examples

In this example, the 2008 and prior years' RMA T-Yield was 97 bushels, the 2015 RMA T-Yield is 105 bushels, the 2017 and 2018 RMA T-Yields are 110. The prior year's APH yield was 117 bushels which was calculated using YA/yield substitutions. For 2018, the insured has elected YA and YC. Insured has applied substitutions for crop years 2009, 2015, and 2018. Insured is eligible for APH Adjustment for crop year 2017; however, the insured chose not to substitute crop year 2017.

| APH Calculation Without YA/Substitutions | | | |
|---|---|---|---|
| Crop<br>Corn | Practice<br>NI | Type<br>GR | Unit<br>00101 |
| Year | Prod | Acres | Yield |
| 2008 | 0 | 90.0 | A0 |
| 2010 | 16000 | 100.0 | A160 |
| 2011 | 10850 | 70.0 | A155 |
| 2012 | 7700 | 55.0 | A140 |
| 2013 | 11375 | 65.0 | A175 |
| 2014 | 13178 | 125.5 | A105 |
| 2015 | 0 | 100.0 | A0 |
| 2016 | 6300 | 100.0 | A63 |
| 2017 | 3510 | 90.0 | A39 |
| 2018 | 0 | 100.0 | A0 |
| | | Total | 837 |

| APH Calculation With YA/Substitutions | | | |
|---|---|---|---|
| Crop<br>Corn | Practice<br>NI | Type<br>GR | Unit<br>00101 |
| Year | Prod | Acres | Yield |
| 2008 | 5220 | 90.0 | A0/58* |
| 2010 | 16000 | 100.0 | A160 |
| 2011 | 10850 | 70.0 | A155 |
| 2012 | 7700 | 55.0 | A140 |
| 2013 | 11375 | 65.0 | A175 |
| 2014 | 13178 | 125.5 | A105 |
| 2015 | 5800 | 100.0 | A0/58** |
| 2016 | 6300 | 100.0 | A63 |
| 2017 | 3510 | 90.0 | NA39*** |
| 2018 | 0 | 100.0 | A0/66**** |
| | | Total | 1019 |

| Method: | Avg. Yield | Yield Floor | Cup | YA APH |
|---|---|---|---|---|
| Yield | 837÷10=<br>84 | 110x .8<br>= 88 | 117<br>*.9 =<br>105 | NA |

| Method | Avg. Yield | Yield Floor | Cup | YA APH |
|---|---|---|---|---|
| Yield | 84 | 88 | 105 | 1019÷10<br>=102 |

In the example above, the average yield prior to yield adjustment is 84 bushels. After YA/substitutions, the approved APH yield would be 105 bushels unless the insured chose to opt-out of the cup, in which case the approved APH yield would be 102 bushels. If the insured chose not to apply YA/substitutions and to opt-out of the cup for this APH database, the approved APH yield would be 88 using the yield floor.

* 60 percent of the 2008 T-Yield
** 60 percent of the 2015 T-Yield
*** 2017 yield substitution not elected.
**** 60 percent of the 2018 T-Yield

## CC. Yield Exclusion Examples

(1) Example of YE Concept

| Yield Exclusion Selection Criteria | | | | |
|---|---|---|---|---|
| Year: 2019 | Commodity: Cotton (0021) | | | State: Xxxx (XX) |
| Data: Example | Plan: Revenue Protection (02) | | | County: Xxxx (XXX) |
| **Types / Practices** | T/P 01 | T/P 02 | T/P 03 | T/P 04 |
| **Type** | No Type Specified 997 | No Type Specified 997 | No Type Specified 997 | No Type Specified 997 |
| **Practice** | Non-IRR 003 | Non-IRR Skip Row 063 | IRR 002 | Organic(Certified) Non-IRR 713 |
| **Yield Exclusions** | | | | |
| | LBS | LBS | LBS | LBS |
| **Eligible Yield Exclusion Years** | **2017 (P)**<br>**2016 (P)**<br>**2011 (C)** | 2017 (P)<br>2016 (P)<br>2011 (C) | 2016 (P)<br>2015 (P) | 2017 (P)<br>2016 (P)<br>2011 (C) |

(P) indicates yield exclusion based on primary county.
(C) indicates yield exclusion based on contiguous county.

| Year | Eligible for Exclusion | T-Yield | 60% of applicable T-Yield | APH | APH w/ YA | APH w/ YA and TA | APH w/ All eligible yields excluded | APH w/All eligible yields excluded and YA | APH w/ All eligible yields excluded, YA and TA |
|---|---|---|---|---|---|---|---|---|---|
| 2009 | No | 126 | 76 | 628 | 628 | 684 | 628 | 628 | 684 |
| 2010 | No | 140 | 84 | 746 | 746 | 797 | 746 | 746 | 797 |
| 2011 | Yes - by contiguous | 164 | 98 | 231 | 231 | 276 | | | |
| 2012 | No | 197 | 118 | 563 | 563 | 602 | 563 | 563 | 602 |
| 2013 | No | 197 | 118 | 430 | 430 | 464 | 430 | 430 | 464 |
| 2014 | No | 197 | 118 | 111 | 118 | 146 | 111 | 118 | 146 |
| 2015 | No | 197 | 118 | 531 | 531 | 554 | 531 | 531 | 554 |
| 2016 | Yes - by county | 197 | 118 | 0 | 118 | 135 | | | |
| 2017 | Yes - by county | 197 | 118 | 35 | 118 | 129 | | | |
| 2018 | No | 219 | 131 | 95 | 131 | 137 | 95 | 131 | 137 |
| | | **Approved APH Yield:** | | **337** | **361** | **392** | **443** | **450** | **483** |

## CC. Yield Exclusion Examples (Continued)

(2) Impact to Approved APH Yield when All Eligible Crop Years are Excluded, Including Those Above the T-Yield

| Year | Eligible for Exclusion | T-Yield | 60% of applicable T-Yield | APH | APH w/ YA | APH w/ YA and TA | APH w/ All eligible yields excluded except for 2006 | APH w/All eligible yields excluded except for 2006 and YA | APH w/ All eligible yields excluded except for 2006, YA and TA |
|---|---|---|---|---|---|---|---|---|---|
| 2011 | Yes - by contiguous | 140 | 84 | 746 | 746 | 797 | 746 | 746 | 797 |
| 2012 | No | 197 | 118 | 563 | 563 | 602 | 563 | 563 | 602 |
| 2013 | No | 197 | 118 | 430 | 430 | 464 | 430 | 430 | 464 |
| 2014 | No | 197 | 118 | 111 | 118 | 146 | 111 | 118 | 146 |
| 2015 | No | 197 | 118 | 531 | 531 | 554 | 531 | 531 | 554 |
| 2016 | Yes - by county | 197 | 118 | 0 | 118 | 135 | | | |
| 2017 | Yes - by county | 197 | 118 | 35 | 118 | 129 | | | |
| 2018 | No | 219 | 131 | 95 | 131 | 137 | 95 | 131 | 137 |
| | | | **Approved Yield:** | **313** | **344** | **371** | **413** | **420** | **450** |

| Year | Eligible for Exclusion | T-Yield | 60% of applicable T-Yield | APH | APH w/ YA | APH w/ YA and TA | APH w/ All eligible yields excluded | APH w/All eligible yields excluded and YA | APH w/ All eligible yields excluded, YA and TA |
|---|---|---|---|---|---|---|---|---|---|
| 2011 | Yes – by contiguous | 140 | 84 | 746 | 746 | 797 | | | |
| 2012 | No | 197 | 118 | 563 | 563 | 602 | 563 | 563 | 602 |
| 2013 | No | 197 | 118 | 430 | 430 | 464 | 430 | 430 | 464 |
| 2014 | No | 197 | 118 | 111 | 118 | 146 | 111 | 118 | 146 |
| 2015 | No | 197 | 118 | 531 | 531 | 554 | 531 | 531 | 554 |
| 2016 | Yes – by county | 197 | 118 | 0 | 118 | 135 | | | |
| 2017 | Yes – by county | 197 | 118 | 35 | 118 | 129 | | | |
| 2018 | No | 219 | 131 | 95 | 131 | 137 | 95 | 131 | 137 |
| | | | **Approved Yield:** | **313** | **344** | **371** | **346** | **355** | **381** |

## CC. Yield Exclusion Examples (Continued)

(3) Using the T-Yield to Complete an APH When Less Than 4 Years Are Left After Exclusion

| Selection Criteria | | | | |
|---|---|---|---|---|
| Year: 2019 | Commodity: Cotton (0021) | | | State: Xxxx (XX) |
| Data: Example | Plan: Revenue Protection (02) | | | County: Xxxx (XXX) |
| **Types / Practices** | T/P 01 | T/P 02 | T/P 03 | T/P 04 |
| **Type** | No Type Specified 997 | No Type Specified 997 | No Type Specified 997 | No Type Specified 997 |
| **Practice** | Non-IRR 003 | Non-IRR Skip Row 063 | IRR 002 | Organic(Certified) Non-IRR 713 |
| **Yield Exclusions** | | | | |
| | LBS | LBS | LBS | LBS |
| **Eligible Yield Exclusion Years** | **2017 (P)**<br>**2016 (P)** | 2017 (P)<br>2016 (P) | 2016 (P)<br>2015 (P) | 2017 (P)<br>2016 (P) |

(P) indicates yield exclusion based on primary county.
(C) indicates yield exclusion based on contiguous county.

| Year | Eligible for Exclusion | T-Yield | 60% of applicable T-Yield | APH | APH w/ YA | APH w/ YA and TA | APH w/ All eligible yields excluded | APH w/All eligible yields excluded and YA | APH w/ All eligible yields excluded, YA and TA* |
|---|---|---|---|---|---|---|---|---|---|
| 2012 | No | 197 | 118 | 563 | 563 | 602 | 563 | 563 | 592 |
| 2014 | No | 197 | 118 | 111 | 118 | 139 | 111 | 118 | 139 |
| 2016 | Yes - by county | 197 | 118 | 0 | 118 | 130 | T 219 | T 219 | T 219 |
| 2018 | No | 219 | 131 | 95 | 131 | 135 | 95 | 131 | 135 |
| | | | **Approved Yield:** | **192** | **233** | **252** | **247** | **258** | **271** |

*County Trend = 5.5
3 actuals in the last 12 = 0.75 of Trend
5.5 x 0.75 = 4.125

## CC. Yield Exclusion Examples (Continued)

(4) Example - YE Only

Insured has produced soybeans in a single BU APH database since 2014. The county T-Yield is 30 bushels. For the 2019 crop year, the insured elects YE. The year circled in the example actuarial documents below is the eligible year for YE. The 2017 crop year is excludable and the insured chooses to exclude the actual yield in 2017.

| Yield Exclusion<br>Selection Criteria | | | | |
|---|---|---|---|---|
| Year: 2019 | Commodity: Soybeans (0081) | | | State: Xxxx (XX) |
| Data: Example | Plan: Revenue Protection (02) | | | County: Xxxx (XXX) |
| **Types / Practices** | T/P 01 | T/P 02 | T/P 03 | T/P 04 |
| **Type** | No Type Specified 997 | No Type Specified 997 | No Type Specified 997 | No Type Specified 997 |
| **Practice** | NFAC (Non-IRR) 053 | FAC (Non-IRR) 043 | NFAC (IRR) 094 | I FAC (IRR) 095 |
| **Yield Exclusions** | | | | |
| | BU | BU | BU | BU |
| **Eligible Yield Exclusion Years** | **2017 (P)** | 2017 (P) | 2017 (P) | 2017 (P) |

| APH Database before YE | | | | |
|---|---|---|---|---|
| 2019 | Soybeans (0081) | NFAC NI (053) | NTS (997) | |
| Unit # 0001-0000 BU | | | Yld Desc | Yield |
| Year | Prod | Acres | | |
| 2014 | 2750 | 50 | A | 55 |
| 2015 | 4700 | 100 | A | 47 |
| 2016 | 2100 | 50 | A | 42 |
| 2017 | 1200 | 100 | A | 12 |
| 2018 | 3050 | 50 | A | 61 |
| T-Yield = 30 | | Approved APH | | 43 |
| | | Average Yield | | 43 |
| | | Rate Yield | | 43 |

Unit 0001-0000 BU

Excludable year(s): 2017

Excluded year(s): 2017

Approved Yield Calculation:
(61 + 42 + 47 + 55) / 4 = 51

Adjusted Yield Calculation:
(61 + 12 + 42 + 47 + 55) / 5 = 43

| APH database **After** YE | | | | | |
|---|---|---|---|---|---|
| 2019 | Soybeans (0081) | NFAC NI (053) | NTS (997) | | |
| Unit # 0001-0000 BU | | | Yld Desc | Yield | YE Opt Out |
| Year | Prod | Acres | | | |
| 2014 | 2750 | 50 | A | 55 | |
| 2015 | 4700 | 100 | A | 47 | |
| 2016 | 2100 | 50 | A | 42 | |
| 2017 | 1200 | 100 | A | 12 | |
| 2018 | 3050 | 50 | A | 61 | |
| T-Yield = 30 | | Approved APH | | 51 | |
| Adjusted Yield = 43 | | Average Yield | | 43 | |
| | | Rate Yield | | 43 | |

## CC. Yield Exclusion Examples (Continued)

(5) Example - Yield Exclusion Elected, Eligible Crop Years Not Excluded and Less Than 4 Years Remain after Exclusions

Insured has a single BU APH database for soybeans. The county T-Yield is 30 bushels. The years circled in the example actuarial documents below are the eligible years for YE. For the 2019 crop year, the insured elects YE and chooses to exclude the 2016 crop year actual yield and to not exclude 2017 crop year actual yield. In this example, the APH database will only have three actual yields after the 2016 actual yield is excluded. The approved APH yield is calculated with the applicable T-Yield (100 percent of the county T-Yield in this case) to complete the APH database because less than four actual yields are available after yield exclusion.

**Yield Exclusion**
**Selection Criteria**

| | | |
|---|---|---|
| Year: 2019 | Commodity: Soybeans (0081) | State: Xxxx (XX) |
| Data: Example | Plan: Revenue Protection (02) | County: Xxxx (XXX) |

| Types / Practices | T/P 01 | T/P 02 | T/P 03 | T/P 04 |
|---|---|---|---|---|
| **Type** | No Type Specified 997 | No Type Specified 997 | No Type Specified 997 | No Type Specified 997 |
| **Practice** | NFAC (Non-IRR) 053 | FAC (Non-IRR) 043 | NFAC (IRR) 094 | I FAC (IRR) 095 |
| **Yield Exclusions** | | | | |
| | BU | BU | BU | BU |
| **Eligible Yield Exclusion Years** | **2017 (P)**<br>**2016 (P)** | 2017 (P)<br>2016 (P) | 2016 (P) | 2016 (P) |

| APH database before YE | | | | |
|---|---|---|---|---|
| 2019 | Soybeans (0081) | NFAC NI (053) | NTS (997) | |
| Unit # 0001-0000 BU | | | Yld Desc | Yield |
| Year | Prod | Acres | | |
| 2015 | 2640 | 80 | A | 33 |
| 2016 | 280 | 40 | A | 7 |
| 2017 | 2880 | 80 | A | 36 |
| 2018 | 1760 | 40 | A | 44 |
| T-Yield = 30 | | Approved APH | | 30 |
| | | Average Yield | | 30 |
| | | Rate Yield | | 30 |

Unit 0001-0000 BU

Excludable year(s): 2017, 2016

Excluded year(s): 2016

Approved Yield Calculation:
(33 + 30T + 36 + 44) / 4 = 36

Adjusted Yield Calculation:
(33 + 7 + 36 + 44) / 4 = 30

| APH database **After** YE | | | | | |
|---|---|---|---|---|---|
| 2019 | Soybeans (0081) | NFAC NI (053) | NTS (997) Yld Limitation Flag 15 | | |
| Unit # 0001-0000 BU | | | Yld Desc | Yield | YE Opt Out |
| Year | Prod | Acres | | | |
| 2015 | 2640 | 80 | A | 33 | |
| 2016 | 280 | 40 | A | 7 | |
| 2017 | 2880 | 80 | A | 36 | Y |
| 2018 | 1760 | 40 | A | 44 | |
| T-Yield = 30 | | Approved APH | | 36 | |
| Adjusted Yield = 30 | | Average Yield | | 30 | |
| | | Rate Yield | | 30 | |

## CC. Yield Exclusion Examples (Continued)

(6) Example - YE and YA Elected

The insured has elected YE for cotton in 2019 and has two OUs for non-irrigated cotton. In the example actuarial documents below, the insured can exclude crop years 2017, 2015, and 2012. For OU 0001-0001, the insured has elected to exclude crop year 2012; not exclude crop years 2017 and 2015; and to use yield substitutions for crop years 2010 and 2015. For OU 0001-0002, the insured elected to not exclude any crop years, although 2017 was an eligible crop year, and did not plant any cotton in crop years 2015 and 2012.

**Yield Exclusion**
**Selection Criteria**

Year: 2019 Commodity: Cotton (0021) State: Xxxx (XX)
Data: Example Plan: Revenue Protection (02) County: Xxxx (XXX)

| Types / Practices | T/P 01 | T/P 02 | T/P 03 | T/P 04 |
|---|---|---|---|---|
| **Type** | No Type Specified 997 | No Type Specified 997 | No Type Specified 997 | No Type Specified 997 |
| **Practice** | Non-IRR 003 | Non-IRR Skip Row 063 | IRR 002 | Organic(Certified) Non-IRR 713 |
| **Yield Exclusions** | | | | |
| | LBS | LBS | LBS | LBS |
| **Eligible Yield Exclusion Years** | **2017 (P)**<br>**2015 (P)**<br>**2012 (P)** | 2017 (P)<br>2015 (P)<br>2012 (P) | 2015 (P)<br>2012 (P) | 2017 (P)<br>2015 (P)<br>2012 (P) |

## CC. Yield Exclusion Examples (Continued)

(6) Example - YE and YA Elected (continued)

| 2019 | Cotton (0021) | NI (003) | NTS (997) | |
|---|---|---|---|---|
| Yield limitation flag: 09 | | | | |
| Unit # 0001-0001 OU | | | Yield Desc | Yield |
| Year | Prod | Acres | | |
| 2009 | 15500 | 50 | A | 310 |
| 2010 | 39600 | 200 | A | 198 |
| 2011 | 86600 | 100 | A | 866 |
| 2012 | 6250 | 50 | A | 125 |
| 2013 | 152800 | 200 | A | 764 |
| 2014 | 84900 | 100 | A | 849 |
| 2015 | 6700 | 50 | A | 134 |
| 2016 | 40400 | 200 | NA | 202 |
| 2017 | 41500 | 100 | A | 415 |
| 2018 | 38040 | 40 | A | 951 |
| T-Yield = 350 | | Approved APH | | 499 |
| | | Average Yield | | 481 |
| | | Rate Yield | | 481 |

| 2019 | Cotton (0021) | NI (003) | NTS (997) | | |
|---|---|---|---|---|---|
| Yield limitation flag: 09 | | | | | |
| Unit # 0001-0001 OU | | | Yield Desc | Yield | YE Opt Out |
| Year | Prod | Acres | | | |
| 2009 | 15500 | 50 | A | 310 | |
| 2010 | 39600 | 200 | A | 198 | |
| 2011 | 86600 | 100 | A | 866 | |
| 2012 | 6250 | 50 | A | 125 | |
| 2013 | 152800 | 200 | A | 764 | |
| 2014 | 84900 | 100 | A | 849 | |
| 2015 | 6700 | 50 | YA | 134 | Y |
| 2016 | 40400 | 200 | NA | 202 | |
| 2017 | 41500 | 100 | A | 415 | Y |
| 2018 | 38040 | 40 | A | 951 | |
| T-Yield = 350 | | Approved APH | | **531** | |
| Adjusted Yield = 499 | | Average Yield | | 481 | |
| | | Rate Yield | | 481 | |

(a) Unit 0001-0001 OU

Excludable crop year(s): 2012, 2015, 2017

Excluded crop year(s): 2012

Substituted crop year(s): 2010, 2015

Average Yield: (951 + 415 + 202 + 134 + 849 + 764 + 125 + 866 + 198 + 310) / 10 = 481

Adjusted Yield: (951 + 415 + 202 + 210 + 849 + 764 +210 + 866 + 210 + 310) / 10 = 499

Approved APH Yield: (951 + 415 + 202 + 210 + 849 + 764 + 866 + 210 + 310) / 9 = 531

## CC. Yield Exclusion Examples (Continued)

(6) Example - YE and YA Elected (continued)

Unit 0001-0002 APH Database **Before** YE

| 2019 | Cotton (0021) | NI (003) | NTS (997) | |
|---|---|---|---|---|
| Yield limitation flag: 01 | | | | |
| Unit # 0001-0002 OU | | | Yield Desc. | Yield |
| Year | Prod | Acres | | |
| 2009 | 11320 | 40 | A | 283 |
| 2010 | 0 | 0 | Z | 0 |
| 2011 | 80880 | 120 | A | 674 |
| 2012 | 0 | 0 | Z | 0 |
| 2013 | 64560 | 80 | A | 807 |
| 2014 | 0 | 0 | Z | 0 |
| 2015 | 0 | 0 | Z | 0 |
| 2016 | 28080 | 120 | A | 234 |
| 2017 | 40080 | 80 | A | 501 |
| 2018 | 35480 | 40 | A | 887 |
| T-Yield = 350 | | Approved APH | | 564 |
| | | Average Yield | | 564 |
| | | Rate Yield | | 564 |

➔ Unit 0001-0002 APH Database **After** YE

| 2019 | Cotton (0021) | NI (003) | NTS (997) | | |
|---|---|---|---|---|---|
| Yield limitation flag: 01 | | | | | |
| Unit # 0001-0002 OU | | | Yield Desc. | Yield | YE Opt Out |
| Year | Prod | Acres | | | |
| 2009 | 11320 | 40 | A | 283 | |
| 2010 | 0 | 0 | Z | 0 | |
| 2011 | 80880 | 120 | A | 674 | |
| 2012 | 0 | 0 | Z | 0 | |
| 2013 | 64560 | 80 | A | 807 | |
| 2014 | 0 | 0 | Z | 0 | |
| 2015 | 0 | 0 | Z | 0 | Y |
| 2016 | 28080 | 120 | A | 234 | |
| 2017 | 40080 | 80 | A | 501 | Y |
| 2018 | 35480 | 40 | A | 887 | |
| T-Yield = 350 | | **Approved APH** | | **564** | |
| **Adjusted Yield = NA** | | Average Yield | | 564 | |
| | | Rate Yield | | 564 | |

(b) Unit 0001-0002 OU

Excludable years: 2012, 2015, 2017

Excluded years: none

Average Yield: (887 + 501 +234 + 807 + 674 + 283) / 6 = 564

Approved Yield: (887 + 501 +234 + 807 + 674 + 283) / 6 = 564

Adjusted Yield: Not Applicable because YE does not apply to APH database

## DD. Cups Example

Cotton 2019 T-Yield 278

Prior year's approved APH yield: 501

T-Yields: 2016-2018=307
2010-2015=256
2009=213

Eligible Yield Exclusion Years: 2017, 2016, 2014, 2012, 2009, 2007 (identified with *)

| Year | Production | Acres | Yield desc | Yield | YA | YE Opt-out |
|---|---|---|---|---|---|---|
| 2009 | 187,846 | 566.4 | A | 332 | | * Y |
| 2010 | 228,861 | 318.0 | A | 720 | | |
| 2011 | 48,341 | 324.5 | A | 149 | 154 | |
| 2012 | 43,441 | 324.5 | A | 134 | 154 | * |
| 2013 | 177,521 | 318.5 | A | 557 | | |
| 2014 | 0 | 332.8 | A | 0 | 154 | * |
| 2015 | 0 | 332.8 | A | 0 | 154 | |
| 2016 | 1,655 | 332.8 | A | 5 | 184 | * |
| 2017 | 0 | 0 | Z | 0 | | * |
| 2018 | 92,447 | 328.4 | A | 282 | | |
| **Rate Yield = 242** | | | **Average Yield = 242** | | | |
| **Adjusted Yield = 299** | | | **Approved APH Yield =** | | | |

* - means year is eligible to be excluded if YE is elected

(1) Approved APH yield with YA: (332+720+154+154+557+154+154+184+282)/9=**299**

(2) Approved APH yield with YA and YE: (332+720+154+557+154+282)/6=**367**

(3) Approved APH yield with YA, YE and YC: 501*0.9=**451**

**Note:** The approved APH yield is equal to the cupped yield because insured elected YC, did not opt- out of the cup applying to this APH database, and the cupped yield is higher than approved APH calculated using YA and/or YE.

In this example, the YC option code must be identified on the P15 yield record transmitted to RMA and the yield limitation flag (YLF) must be set to 09 (because YA was elected). If the insured did not elect YA, the yield limitation flag must be set to 16 with the YC option code identified on the P15 yield record.

## EE. Yield Reductions- Excessive Actual Yield (Without Verifiable Records)

**Example 1:** The following example is for a carryover insured who reported an excessive yield for 2018 on the 2019 production report. The AIP requested production evidence for all OU within the BU. The insured indicated that unit 0002-0001OU produced ten, 400 bu. truckloads of corn (4000 bu./10.0 acres. = 400 bu./acre.); however, OU 0002-0002 (same BU) produced only 80 bushels per acre and loss records were available for that unit.

The insured did not provide any verifiable records to support the excessive actual yield certified (the two units adjoined, had similar planting dates, soils and growing conditions). Therefore, the assigned yield procedure is applicable (168 X .75 = 126) for the 2018 crop year, resulting in an approved APH yield of 159. The insured does not qualify for OUs, separate APH databases are maintained, and other BU and OU with actual yields where claim records are not available require the use of assigned yields.

**ORIGINAL APH DATABASE**

| CROP: 0041 (CORN)<br>PRACTICE: 003 (NI)<br>TYPE: 029 (GRAIN)<br>UNIT NO: 0002-0001OU | | LEGAL: S1/2SEC. 12-XX-XX FSA FN:XX01 | T-YIELD: 90 BU. |
|---|---|---|---|
| CROP YEAR | TOTAL PRODUCTION | ACRES | YIELD |
| 2013 | | | |
| 2014 | 380 | 2.0 | A190 |
| 2015 | 4000 | 40.0 | A100 |
| 2016 | 600 | 2.0 | A300 |
| 2017 | 16000 | 200.0 | A80 |
| 2018 | 4000 | 10.0 | A400 |
| | | | TOTAL: 1070 |
| PRELIMINARY YIELD: 214<br>PRIOR YIELD: 168 | | | APPROVED APH YIELD: |

**REDUCED APH DATABASE**

| CROP: 0041 (CORN)<br>PRACTICE: 003 (NI)<br>TYPE: 029 (GRAIN)<br>UNIT NO: 0002-0001 BU | | LEGAL: S1/2SEC. 12-XX-XX FSA FN:XX01 | T-YIELD: 90 BU. |
|---|---|---|---|
| CROP YEAR | TOTAL PRODUCTION | ACRES | YIELD |
| 2013 | | | |
| 2014 | 380 | 2.0 | A190 |
| 2015 | 4000 | 40.0 | A100 |
| 2016 | 600 | 2.0 | A300 |
| 2017 | 16000 | 200.0 | A80 |
| 2018 | | 10.0 | **P126** |
| | | | TOTAL:**796** |
| PRELIMINARY YIELD: 214<br>PRIOR YIELD: 168 | | | APPROVED APH YIELD: **159 (REDUCED)** |

## FF. Inconsistent Approved APH Yield and Insured Acreage Limitation

**Example 2:** Using the information from Example 1, Example 2 illustrates whether the reduced approved APH yield (159) requires any further reduction after insured acreage is reported. The insured reported 100.0 planted and 100.0 prevented planted acres of non-irrigated corn (grain) for acreage using the approved APH yield calculated from the database.

The average number of acres (including the 2018 crop year) with actual/assigned yields reported is 50.8 (2.0 + 40.0 + 2.0 + 200.0 + 10.0 = 254/5). The insured acreage (200.0) does not exceed 400 percent of the average acreage; however, three individual crop years (2014, 2016, and 2018) each contain less than 10 percent of the current year's insured acreage.

The insured has 10 non-irrigated units of corn (grain) in his farming operation that contains actual/assigned yields. The simple average of the approved APH yields for these units is 125.5, rounded to 126 bu. per acre. The reduced approved APH yield (159) exceeds 115 percent of the simple average (126 X 1.15 = 145 bu.) and one of the insured acreage limitations was exceeded; therefore, the reduced approved APH yield must be reduced further. The simple average of the other nine approved APH yields (excluding the approved APH yield that must be reduced) is 122 bu. per acre.

| **ORIGINAL APH DATABASE** | | | |
|---|---|---|---|
| CROP: 041 (CORN)<br>PRACTICE: 003 (NI)<br>TYPE: 029 (GRAIN)<br>UNIT NO: 0002-0001 (.1) | | LEGAL: S1/2SEC. 12-XX-XX<br>FSA FN:XX01 | T-YIELD: 90 BU. |
| CROP YEAR | TOTAL PRODUCTION | ACRES | YIELD |
| 2014 | 380 | 2.0 | A190 |
| 2015 | 4000 | 40.0 | A100 |
| 2016 | 600 | 2.0 | A300 |
| 2017 | 16000 | 200.0 | A80 |
| 2018 | ~~4000~~ | 10.0 | **P126** |
| | | | TOTAL: **796** |
| PRELIMINARY YIELD: 214<br>PRIOR YIELD: 168 | | | 21 APPROVED APH YIELD<br>~~**159 (REDUCED)**~~<br>**122 (REDUCED AGAIN)** |

## FF. Inconsistent Approved APH Yield and Insured Acreage Limitation (continued)

**Example 3:**

(1) Three existing APH databases insured as three separate OUs as follows:

| APH Database | Approved Yield | Average Acres in APH Database | 2012 Acres |
|---|---|---|---|
| 0001-0001 | 30 | 20 | 50 |
| 0001-0002 | 50 | 5 | 0 |
| 0001-0003 | 40 | 25 | 60 |

The county T-Yield is 22 bushels. For 2019, the insured adds 25 acres of cropland as a separate OU and plants all 25 acres to the same insured crop.

(2) **Step 1:** Determine the simple average of the approved yields for all three existing APH databases.

**Result:** 40 bushels (30 + 50 + 40 = 120/3 = 40).

(3) **Step 2:** Multiply the average by 1.15

**Result:** 46 bushels (40 bushels X 1.15 = 46).

(4) **Step 3:** Compare each approved APH yield to the result in Step 2 to determine if an inconsistent yield exists.

**Result**: The approved yield for APH database 0001-0002 (50 bushels) exceeds 46 bushels and is considered an inconsistent approved yield but will only be reduced if one or both of the insured acreage limitations are exceeded. Since there are no acres planted or prevented from being planted for this database for 2019, the acreage limitations are not exceeded and there is no reduction in the approved yield for APH database 0001-0002.

(5) The 25 acres of added land are being added as a separate OU; therefore, those acres are not included in the acreage limitation computations for any of the existing APH databases. The added land APH database is established using the SA T-Yield of 40 bushels.

The SA T-Yield is not an inconsistent yield since it is the average of the existing APH databases' approved yields and does not exceed 115 percent of the average of all of the approved yields.

**GG. Reserved**

**GG. Reserved (Continued)**

.

**GG. Reserved (Continued)**

## HH. UUF or a Third Party

(1) When part of the acreage within an APH database is affected by UUF or third party damage, production and planted/insured acres for those acres are not included in the APH database. The production and acreage from the remaining acreage is included in the APH database. For example, 150 acres were planted in 2018, but 50 acres were damaged by spray drift from a neighbor's field and the requirements in Para. 1310 H were met. Since the requirements for third party damage were met, only the production from the 100 acres undamaged by the spray drift are included in the 2019 and subsequent year's APH database.

| 2018 APH DATABASE | | | | | 2019 APH DATABASE | | | |
|---|---|---|---|---|---|---|---|---|
| **YEAR** | **PROD** | **ACRES** | **YIELD** | | **YEAR** | **PROD** | **ACRES** | **YIELD** |
| 2008 | 11250 | 150 | A75 | | 2009 | 11100 | 150 | A74 |
| 2009 | 11100 | 150 | A74 | | 2010 | 12040 | 140 | A86 |
| 2010 | 12040 | 140 | A86 | | 2011 | 8450 | 130 | A65 |
| 2011 | 8450 | 130 | A65 | | 2012 | 12150 | 150 | A81 |
| 2012 | 12150 | 150 | A81 | | 2013 | 10005 | 145 | A69 |
| 2013 | 10005 | 145 | A69 | | 2014 | 10950 | 150 | A73 |
| 2014 | 10950 | 150 | A73 | | 2015 | 12040 | 146 | A64 |
| 2015 | 12040 | 146 | A64 | | 2016 | 3750 | 150 | A25 |
| 2016 | 3750 | 150 | A25 | | 2017 | 14250 | 150 | A95 |
| 2017 | 14250 | 150 | A95 | | 2018 | 8000 | 100 | FA80 |
| **APPROVED APH 707/10 = 71** | | | | | **APPROVED APH 712/10 = 71** | | | |

(2) When all of the acreage within an APH database is affected by UUF or third party damage, the acres, production and yield are all reported as null, with a FD yield descriptor. For example, in 2018 sparks from a train started a fire that destroyed all of the acreage within an APH database. This was an UUF that is not covered by crop insurance and met the requirements in Para. 1310 H. Therefore, 2018 is included in the APH database with a 0 for production and yield and the number of acres that were planted/insured and subsequently damaged. When the approved APH yield is calculated for the 2019 APH database, the 2018 crop year is not included in the calculation of the average, rate or approved APH yield.

| 2018 APH DATABASE | | | | | 2019 APH DATABASE | | | |
|---|---|---|---|---|---|---|---|---|
| **YEAR** | **PROD** | **ACRES** | **YIELD** | | **YEAR** | **PROD** | **ACRES** | **YIELD** |
| | | | | | 2009 | 11100 | 150 | A74 |
| 2009 | 11100 | 150 | A74 | | 2010 | 12040 | 140 | A86 |
| 2010 | 12040 | 140 | A86 | | 2011 | 8450 | 130 | A65 |
| 2011 | 8450 | 130 | A65 | | 2012 | 12150 | 150 | A81 |
| 2012 | 12150 | 150 | A81 | | 2013 | 10005 | 145 | A69 |
| 2013 | 10005 | 145 | A69 | | 2014 | 10950 | 150 | A73 |
| 2014 | 10950 | 150 | A73 | | 2015 | 12040 | 146 | A64 |
| 2015 | 12040 | 146 | A64 | | 2016 | 3750 | 150 | A25 |
| 2016 | 3750 | 150 | A25 | | 2017 | 14250 | 150 | A95 |
| 2017 | 14250 | 150 | A95 | | 2018 | 0 | 0 | FD0 |
| **APPROVED APH 632/9 = 70** | | | | | **APPROVED APH 632/9 = 70** | | | |

**HH. UUF or a Third Party (Continued)**

(3) Example of third party damage with insured cause of loss on same acreage. Insured has a 70 bushel approved APH yield on a 100 acre NI wheat APH database. Chemical overspray by the county roadside crew spraying weeds in the drainage ditches damaged 30 acres. Drought conditions, an insured cause of loss, has reduced the production on all 100 acres. For the purposes of illustration, assume that the insured has requested the acres damaged by a third party not be included in his APH database and the requirements in Para. 1310H are met. UIC loss appraisal determined 900 bu. for the 30 acres, or 30 bu./acre, due to the UIC (third party damage). The insured is able to harvest 10 bu./acre from the 30 acres damaged by a third party for a total of 300 bushels. The remaining 70 acres yielded 2,800 bushels, or 40 bu./acre, which suffered an insured cause of loss. Total production to count for the unit is 4,000 bushels.

(a) 2018 Acreage report is modified to change the acreage type for the third party damaged acres (requirement waived for losses in 2018):

(i) 70 acres – Insured-Planted acreage;

(ii) 30 acres – UUF/Third Party damaged acreage;

(b) 2018 Production Worksheet/Claim (used as production report in 2019)

(i) 30 acres - stage code *; 900 bu. uninsurable cause of loss appraisal, 300 bu. harvested production to count on the 30 acres; 70 acres - stage code H 2,800 bu.;

(ii) Total production to count for the unit is 4,000 bushels.

* There will be 3 new stage codes: one for UUF/Third party damage-no production on same acreage; one for UUF/Third Party damage - appraised production on same acreage; one for UUF/Third Party damage – harvested production on same acreage.

**HH. UUF or a Third Party (Continued)**

(c) 2019 APH database is updated with 2018 actual yield:

2018 2,800 bu. production 70 acres 40 FA.

| **2019** | **UNIT 0001-0001** | | |
|---|---|---|---|
| YEAR | PROD | ACRES | YIELD |
| 2012 | | | |
| 2013 | 7,500 | 100.0 | A75 |
| 2014 | | 0.0 | Z |
| 2015 | | 100.0 | P56 |
| 2016 | 8,100 | 100.0 | A81 |
| 2017 | 6,600 | 100.0 | A66 |
| 2018 | 2,800 | 70.0 | FA40 |
| | | TOTAL | 318 |
| | | APH | 64 |

(4) Another example of third party damage with insured cause of loss on same acreage. Insured has 100 bushel approved APH yield on a 100 acre corn for grain APH database (unit/P/T). A freak severe thunderstorm startled the neighbor's cattle who tore out the fence and damaged all 100 acres before the neighbor was able to remove them. Drought conditions, an insured cause of loss, has reduced the production on all 100 acres. For the purposes of illustration, assume that the insured has requested the acres damaged by a third party not be included in his APH database and the requirements in Para. 1310H are met. UIC loss appraisal determined third party damage at 20 bu./acre. Field A appraised at 20 bu./acre for 50 acres and was released. The remaining 50 acres were taken to harvest and yielded 1,500 bu., or 30 bu./acre. Total production to count for the unit is 4,500 bu.

(a) 2018 Acreage report is modified to change the acreage type for the third party damaged acres (requirement waived for losses in 2018):

100 acres – UUF/Third Party damaged acreage

(b) 2018 Production Worksheet/Claim (used as production report in 2019):

(i) 50 acres - stage code *; 1,000 bu. appraised potential; 1,000 bu. uninsurable cause of loss appraisal;

(ii) 50 acres - stage code *, 1,000 bu. uninsurable cause of loss appraisal; 1,500 bu. production to count;

* There will be 3 new stage codes: one for UUF/Third party damage-no production on same acreage; one for UUF/Third Party damage - appraised production on same acreage; one for UUF/Third Party damage – harvested production on same acreage.

**HH. UUF or a Third Party (Continued)**

(c) 2019 APH database is updated with 2018 actual yield:

2018 0 production 0 acres 0 FD.

| **2019** | **UNIT 0001-0001** | | |
|---|---|---|---|
| YEAR | PROD | ACRES | YIELD |
| 2012 | | | |
| 2013 | 7,500 | 100.0 | A57 |
| 2014 | | 0.0 | Z |
| 2015 | 15,000 | 100.0 | A150 |
| 2016 | 8,100 | 100.0 | A81 |
| 2017 | 13,000 | 100.0 | A110 |
| 2018 | 0 | 0.0 | FD0 |
| AVE | 100 | TOTAL | 398 |
| RATE | 100 | APH | 100 |

**Reserved**

**Reserved**

## A. Category B Crops- APH Databases Certified Organic or Transitional Acreage Affected by Prohibited Substances, Converted Back to Conventional Farming Practices and Suspended Or Revoked Certification

In the event of an occurrence of a prohibited substance(s) or drift, the Insured may transition the acreage towards organic status or return to conventional farming practices.

**Scenario:** The insured in 2018 notifies the certifying agency of the spraying of prohibited substance(s) or drift onto the organic acreage. As a result of the occurrence, the certifying agency did not issue a certificate or, the current certificate is considered invalid.

(a) If the acreage was found to be affected by drift before the ARD, then the affected yield (2018 actual yield) is added to the Conventional APH database.

| (a) **CONVENTIONAL APH DATABASE** | | | |
|---|---|---|---|
| CROP YEAR: 2019 | | UNIT NO. 0001-0000 | |
| YEAR | TOTAL PROD | ACRES | YIELD |
| 2005 | 17,443 | 160.0 | A109 |
| 2006 | 15,377 | 125.0 | A123 |
| 2008 | 8,965 | 80.0 | A112 |
| 2009 | 12,876 | 103.0 | A125 |
| 2011 | 10,623 | 90.0 | A118 |
| 2012 | 14,615 | 115.0 | A127 |
| 2015 | | | Z |
| 2016 | | | Z |
| 2017 | | | Z |
| 2018 | 4,152 | 45.0 | A92 |
| | | TOTAL | 806 ÷ 7 = 115.14 |
| | | APPROVED APH YIELD | 115 |

(b) If the acreage was found to be affected by drift after the ARD, the yield (2018 actual yield) is added to the Certified Organic APH database.

| (b) **CERTIFIED ORGANIC APH DATABASE** | | | |
|---|---|---|---|
| CROP YEAR: 2019 | | UNIT NO. 0001-0000 | |
| YEAR | TOTAL PROD | ACRES | YIELD |
| 2015 | | | T80 |
| 2016 | | | T80 |
| 2017 | 4,042 | 40.0 | A101 |
| 2018 | 4,152 | 45.0 | A92 |
| | | TOTAL | 353 ÷ 4 =88.25 |
| | | APPROVED APH YIELD | 88 |

## A. Category B Crops- APH Databases Certified Organic or Transitional Acreage (cont.)

(c) To regain certified organic status, the acreage that was found to be affected by drift will have to be transitioned again for 36-months towards full organic certification by the NOP standards. The insured must submit to the AIP a copy of the updated organic plan that includes all changes in practices, procedures, and inputs from the previous crop year's organic plan, if applicable, or written documentation from a certifying agent indicating an organic plan is in effect, as specified in the BP. Example of 2020 crop year APH database while in transition back to certified organic in (c) below.

| (c) **TRANSITIONAL APH DATABASE** | | | |
|---|---|---|---|
| CROP YEAR: 2020 | | UNIT NO. 0001-0000 | |
| YEAR | TOTAL PROD | ACRES | YIELD |
| 2014 | 5,345 | 60.0 | A89 |
| 2015 | 5,268 | 56.0 | A94 |
| 2016 | 4,810 | 49.0 | A98 |
| 2017 | | | Z |
| 2018 | | | Z |
| 2019 | 3,734 | 41.0 | A91 |
| | | TOTAL | 372 ÷ 4 = 93 |
| | | APPROVED APH YIELD | 93 |

(d) Example of APH database upon completion of transition back to certified organic in (d) below.

| (D) **CERTIFIED ORGANIC APH DATABASE** | | | |
|---|---|---|---|
| CROP YEAR: 2022 | | UNIT NO. 0001-0000 | |
| YEAR | TOTAL PROD | ACRES | YIELD |
| 2016 | | | T80 |
| 2017 | 4,042 | 40.0 | A101 |
| 2018 | 4,152 | 45.0 | A92 |
| 2019 | | | Z |
| 2020 | | | Z |
| 2021 | 3,734 | 41.0 | A91 |
| | | TOTAL | 364 ÷ 4 = 91 |
| | | APPROVED APH YIELD | 90 |

## A. Category B Crops- APH Databases Certified Organic or Transitional Acreage… (cont.)

(2) Converting back to conventional farming practices. Use prior years' conventional actual yields to compute the approved APH yield whenever acreage that is normally farmed under an organic practice is transitioned back to a conventional farming practice.

**Scenario**:

The following illustrations demonstrate when the insured returns to the conventional farming practices. The insured has prior years conventional production history. During crop years 2012-2017, the insured farmed organically. In 2018, the insured returns to conventional farming practices.

(a) The Conventional APH database after the conversion from certified organic farming practices back to conventional farming practices.

| (a) CONVENTIONAL APH DATABASE | | | |
|---|---|---|---|
| CROP YEAR: 2019 | | UNIT NO. 0001-0000 | |
| YEAR | TOTAL PROD | ACRES | YIELD |
| 2005 | 17,443 | 160.0 | A109 |
| 2006 | 15,377 | 125.0 | A123 |
| 2007 | 8,965 | 80.0 | A112 |
| 2008 | 12,876 | 103.0 | A125 |
| 2009 | 10,623 | 90.0 | A118 |
| 2010 | 14,615 | 115.0 | A127 |
| 2011 | | | Z |
| 2012 | | | Z |
| 2017 | | | Z |
| 2018 | 19,250 | 110.0 | A175 |
| | | TOTAL | 889 ÷ 7 = 127.0 |
| | | APPROVED APH YIELD | 127 |

(b) Because the insured returned to farming acreage under the conventional farming practices, the AIP is only required to submit the Conventional APH database to RMA. However, the AIP must maintain the Certified Organic and Transitional APH databases.

## A. Category B Crops- APH Databases Certified Organic or Transitional Acreage … (cont.)

(3) A certified organic farming operation whose certification has been suspended or revoked will be ineligible to receive certification under the organic practice. The certificate is no longer valid.

**Scenario:** In 2019, a certifying agency revokes an insured's certification:

(a) If an insured's certification was revoked by the certifying agency before the ARD, the acreage must be insured under conventional farming practices.

| (a) **CONVENTIONAL APH DATABASE** | | | |
|---|---|---|---|
| CROP YEAR: 2019 | | UNIT NO. 0001-0000 | |
| YEAR | TOTAL PROD | ACRES | YIELD |
| 2005 | 17,443 | 160.0 | A109 |
| 2006 | 15,377 | 125.0 | A123 |
| 2007 | | | Z |
| 2008 | 8,965 | 80.0 | A112 |
| 2009 | 12,876 | 103.0 | A125 |
| 2010 | | | Z |
| 2011 | 10,623 | 90.0 | A118 |
| 2012 | 14,615 | 115.0 | A127 |
| 2017 | | | Z |
| 2018 | 4,785 | 53.0 | A90 |
| | | TOTAL | 804 ÷ 7 = 114.85 |
| | | APPROVED APH YIELD | 115 |

(b) If an insured's certification, however, was revoked by the certifying agency after the ARD, the certified organic APH database in effect at ARD remains for the remainder of the crop year. The acreage does not qualify as certified organic the following crop year.

| (b) **CERTIFIED ORGANIC APH DATABASE** | | | |
|---|---|---|---|
| CROP YEAR: 2019 | | UNIT NO. 0001-0000 | |
| YEAR | TOTAL PROD | ACRES | YIELD |
| 2014 | 5,528 | 51.0 | A108 |
| 2015 | 6,225 | 53.0 | A117 |
| 2016 | | | Z |
| 2017 | 5,887 | 60.0 | A98 |
| 2018 | 4,785 | 53.0 | A90 |
| | | TOTAL | 413 ÷ 4 = 103.25 |
| | | APPROVED APH YIELD | 103 |

## B. Category B Crops- Multi-Purpose Production and Yield Worksheet

This worksheet may be used to arrive at the factored production to be entered on the APH database in the total production column. See A(1)-A(8) for instructions and suggested column headings for this worksheet.

| CROP YEAR | COLUMN | | | | | |
|---|---|---|---|---|---|---|
| | 1 | 2 | 3 | 4 | 5 | 6 |
| XXXX | | | | | | |
| XXXX | | | | | | |
| XXXX | | | | | | |
| XXXX | | | | | | |
| XXXX | | | | | | |
| XXXX | | | | | | |
| XXXX | | | | | | |
| XXXX | | | | | | |
| XXXX | | | | | | |
| XXXX | | | | | | |

(1) The worksheet may be used to separate production that was commingled between P/T/TMAs that have different T-Yields. This worksheet shall not be used to separate production between conventional, transitional or organic practices.

Production from types or varieties that are being separated must have the same unit of measure (e.g., pounds). If the T-Yields are the same, a higher yielding practice has not been designated by RMA and the insured cannot separate the commingled production or provide a yield estimate by P/T/TMA; the production for each applicable P/T/TMA may be prorated instead of using the Multi-Purpose Production and Yield Worksheet if acres of the P/T/TMAs are provided. See Para. 1715C.

Col. 1 - P/T/TMA
Col. 2 - Planted Acres (for skip-row cotton, acres considered planted to cotton)
Col. 3 - Transitional Yield (T-Yield)
Col. 4 - Yield Extension (Col. 2 X Col. 3)
Col. 5 - Factor (total commingled production ÷ total yield extensions from Col. 4)*
Col. 6 - Yield (Col. 3 X Col.5)

* Values rounded to nearest hundredth.

**B. Category B Crops-Multi-Purpose Production and Yield Worksheet (Continued)**

(2) Converting Skip-row Cotton Production to Solid Plant

Col. 1 - Total Production
Col. 2 - Yield Factor See Exhibit 11 Skip Row Factors C, D, E and F
Col. 3 - Total Production (factored, Col. 1 ÷ Col. 2)
Col. 4 - Gross Acres X percent planted factor See Exh. 11 Skip Row Factors G
Col. 5 - Acres
Col. 6 - Yield (solid planted)

(3) Determining Skip-Row Cotton Yield Factors. See Exh. 11 Skip Row Factors H used when production is commingled between more than one non-irrigated skip-row planting pattern:

Col. 1 - Non-Irrigated Skip-Row Pattern
Col. 2 - Planted Acres (acres considered planted to Cotton for each pattern)
Col. 3 - Yield Factor (for each different pattern)
Col. 4 - Yield Extension
Col. 5 - Yield Factor (divide total yield extensions (Col. 4) by total acres (Col. 2)
Col. 6 - Solid Planted Yield (skip-row yield ÷ yield factor)

(4) Green Peas. See Para. G

Col. 1 - Dollars Received for Crop
Col. 2 - Contract price for the TR Sieve number shown on the actuarial documents.
Col. 3 - Adjusted Production (Col. 1 ÷ Col. 2)
Col. 4 - Lbs. Dry Peas ÷ .60 (converts to green pea equivalent)
Col. 5 - Total Production (Col. 3 + Col. 4)

(5) Contract Seed Beans (Bush Varieties for Garden Seed) and Wrinkled Seed Peas. See Para. F:

Col. 1 - Reference Year Adjustment Factor (RYAF)
Col. 2 - Total Dollars ($) Received (or value of)
Col. 3 - RYAF total $ (rounded to whole $). Transfer factored $ to the APH Database.

(6) Sugar Beets, used to adjust production to percentage of sugar on the actuarial documents:

Col. 1 - % Sugar (records)*
Col. 2 - % Sugar (actuarial documents)*
Col. 3 - Sugar Factor* (Col 1 ÷ Col 2)
Col. 4 - Actual Production
Col. 5 - Adjusted Production (Col. 3 x Col. 4)

* Values Rounded to the nearest thousand

## B. Category B Crops-Multi-Purpose Production and Yield Worksheet (Continued)

(7) Potatoes used when the Northern Potato Quality Endorsement or Northern Potato Processing Quality Endorsement is applicable:

Col. 1 - Fresh % No. 1
Col. 2 - Fresh % No. 2 or better
Col. 3 - Processing % No. 1
Col. 4 - Processing % No. 2 or Better

(8) Cultivated Wild Rice, used to adjust green weight production to finished weight production):

Col. 1 - Total green weight production
Col. 2 - % recovery (production records or actuarial documents)
Col. 3 - Finished weight (Col. 1 x Col. 2)

## C. Category B Crops-Master Yields

(1) MY List by State and Crop. Check the actuarial documents for applicable crop programs, practices and maps or supplements.

| STATE | CROPS |
|---|---|
| Alaska | Potatoes |
| Arizona | Potatoes |
| California | Alfalfa Seed, Dry Beans, Onions, Potatoes, Sugar Beets, and Tomatoes (Processing & Fresh Market) |
| Colorado | Potatoes, Onions, and Sugar Beets |
| Idaho | Alfalfa Seed, Dry Beans, Canola/Rapeseed, Onions, Dry Peas, Green Peas, Potatoes, Safflower, Sugar Beets, and Sweet Corn (Processing) |
| Indiana | Tomatoes (Processing) |
| Kansas | Potatoes |
| Missouri | Potatoes |
| Michigan | Dry Beans, Sugar Beets, and Tomatoes (Processing) |
| Minnesota | Potatoes and Sugar Beets |
| Montana | Alfalfa Seed, Sugar Beets and Dry Peas |
| Nebraska | Potatoes and Sugar Beets |
| Nevada | Alfalfa Seed, Potatoes |
| New Mexico | Potatoes |
| North Dakota | Dry Peas, Potatoes, Sugar Beets |
| Ohio | Tomatoes (Processing) |

## C. Category B Crops-Master Yields (Continued)

| STATE | CROPS |
|---|---|
| Oregon | Alfalfa Seed, Dry Beans, Processing Beans, Canola/Rapeseed, Dry Peas, Green Peas, Onions, Potatoes, Sugar Beets, and Sweet Corn (Processing) |
| South Dakota | Potatoes and Dry Peas |
| Texas | Potatoes |
| Utah | Alfalfa Seed, Onions |
| Washington | Alfalfa Seed, Dry Beans, Processing Beans, Canola/Rapeseed, Dry Peas, Green Peas, Onions, Potatoes, Sugar Beets, and Sweet Corn (Processing) |
| Wisconsin | Potatoes |
| Wyoming | Alfalfa Seed, Potatoes and Sugar Beets |

(2) Example of MY Concept. This example illustrates the MY concept. The crop has been grown in two TMAs. One P/T (IRR) has been grown in each TMA. Figures 1-3 are located in TMA

(a) Figure 1, production reports for farm A indicate two actual yields (one BU located in section 11).

Figure 1: Unit 0001-0000, Sec. 11, TMA 1

| YEAR | PROD | ACRES | YIELD |
|---|---|---|---|
| 2015 | 42,200 | 100.0 | A422 |
| 2016 | | 0.0 | Z |
| 2017 | 43,000 | 100.0 | A430 |
| 2018 | | 0.0 | Z |
| | | | |
| PRIOR YIELD | | APPROVED APH | |

Figure 2: Unit 0002-0001, Sec. 12, TMA 1

| YEAR | PROD | ACRES | YIELD |
|---|---|---|---|
| 2015 | | 0.0 | Z |
| 2016 | 40,000 | 100.0 | A400 |
| 2017 | | 0.0 | Z |
| 2018 | 35,200 | 80.0 | A440 |
| | | | |
| PRIOR YIELD | | APPROVED APH | |

## C. Category B Crops-Master Yields (Continued)

(b) Figures 2 and 3, production reports for farm B indicate two actual yields for unit 0002-0001 (located in section 12) and no actual yields for unit 0002-0002 (located in section 13).

Figure 3: Unit 0002-0002, Sec. 13, TMA 1

| YEAR | PROD | ACRES | YIELD |
|---|---|---|---|
| 2015 | | 0.0 | Z |
| 2016 | | 0.0 | Z |
| 2017 | | 0.0 | Z |
| 2018 | | 0.0 | Z |
| | | | |
| PRIOR YIELD | | APPROVED APH | |

(c) Figures 4, 5 and 6 are production reports for farm C, which indicate three OUs located in sections 27, 28, and 36 all within TMA 2. Unit 0003-0001 does not have any actual yields. Unit 0003-0002 has two actual yields. Unit 0003-0003 has one actual yield. Each actual yield must be compared to the applicable T-Yield for the TMA multiplied by the actual yield verification factor for the applicable practice (TMA 1 [400 x 1.40 = 560] TMA 2 [350 x 1.40 = 490]). None of the actual yields exceed the factored T-Yields; therefore, they are considered reasonable.

Figure 4: Unit 0003-0001, Sec. 27, TMA 2

| YEAR | PROD | ACRES | YIELD |
|---|---|---|---|
| 2015 | | 0.0 | Z |
| 2016 | | 0.0 | Z |
| 2017 | | 0.0 | Z |
| 2018 | | 0.0 | Z |
| | | | |
| PRIOR YIELD | | APPROVED APH | |

## C. Category B Crops-Master Yields (Continued)

Figure 5: Unit 0003-0002, Sec. 28, TMA 2

| YEAR | PROD | ACRES | YIELD |
|---|---|---|---|
| 2015 | 20,250 | 50.0 | A405 |
| 2016 | | 0.0 | Z |
| 2017 | | 0.0 | Z |
| 2018 | 40,000 | 100.0 | A400 |
| | | | |
| PRIOR YIELD | | APPROVED APH | |

Figure 6: Unit 0003-0003, Sec. 36, TMA 2

| YEAR | PROD | ACRES | YIELD |
|---|---|---|---|
| 2015 | | 0.0 | Z |
| 2016 | | 0.0 | Z |
| 2017 | | 0.0 | Z |
| 2018 | 8,200 | 20.0 | A410 |
| | | | |
| PRIOR YIELD | | APPROVED APH | |

(d) Figures 7 and 8 are MY APH Summaries, one for each TMA. These summaries are completed following the same instructions as for an APH database outlined in Part 15, except they contain the total acreage and production of the crop for each TMA for the operator/tenant entity requesting the MY.

The insured has filed production reports for each OU for at least the most recent policy crop year (on planted units) in the base period and therefore qualifies for OUs.

Figure 7: MY Summary, TMA 1
Applicable to Units 0001-0000, 0002-0001, and 0002-0002

| YEAR | PROD | ACRES | YIELD |
|---|---|---|---|
| 2015 | 42,200 | 100.0 | A422 |
| 2016 | 40,000 | 100.0 | A400 |
| 2017 | 43,000 | 100.0 | A430 |
| 2018 | 35,200 | 80.0 | A440 |
| | | | 1692 |
| PLEM. YIELD | 423 | APPROVED APH YIELD | |

## C. Category B Crops–Master Yields (Continued)

Figure 8, MY Summary, TMA 2
Applicable to Units 0003-0001 through 0003-0003

| YEAR | PROD | ACRES | YIELD |
|---|---|---|---|
| 2013 | | | T350 |
| 2014 | | | T350 |
| 2015 | 20,250 | 50.0 | A405 |
| 2016 | | 0.0 | Z |
| 2017 | | 0.0 | Z |
| 2018 | 48,200 | 120.0 | A402 |
| | | | 1507 |
| PLEM. | 377 | APPROVED APH YIELD | |

The summaries are forwarded to the verifier who approves the initial MY. A separate MY Summary is required for each TMA for each P/T requested. Four years of records are required for MY and 100 percent T-Yields apply with IDY=T.

Compare each preliminary MY to the applicable T-Yield for the TMA multiplied by the applicable MY verification factor (IRR: TMA 1 [400 x 1.40 = 560] TMA 2 [350 x 1.40 = 490]). Neither of the preliminary MYs exceeds the T-Yields; therefore, they are considered reasonable and approved.

*Yield descriptors are being used only to demonstrate types of yields used in establishing MY summary.

## D. Category B Crops-Acreage Emerging from USDA Program, New Breaking, and Native Sod Examples

(1) Acreage that has not been planted in at least two of the previous three crop years to comply with any other USDA program is insurable under the terms of the BP Sec. 9(a)(1)(i)(A). For example, acreage that has been in CRP for 2016 and prior crop years would be insurable under the terms of the BP if planted for the first time since emerging from CRP in either the 2017 or 2018 crop years.

If the acreage has not been planted within two crop years (i.e., 2017 or 2018) since emerging from CRP, it no longer meets the requirement to comply with any other USDA program and requires a WA to insure the initial year of breaking.

| 2015 | 2016 | 2017 | 2018 | 2019 |
|---|---|---|---|---|
| CRP | CRP | Insurable (emerging from CRP) | Insurable (emerging from CRP) | Insurable via WA for New Breaking |

**D. …Emerging from USDA Program, New Breaking, and Native Sod Examples (Continued)**

(2) **Example 1**: The insured has acreage emerging from CRP in September 2018 with no production history and meets the insurability requirements for the crop. The emerging CRP acreage is being added to an existing unit 0001-0001 OU and production history for the acreage prior to enrollment in CRP is not available.

The year the acreage emerges from CRP, a separate APH database must be established for the acreage coming out of CRP and the acreage must be reported by Farm/Tract/Field number.

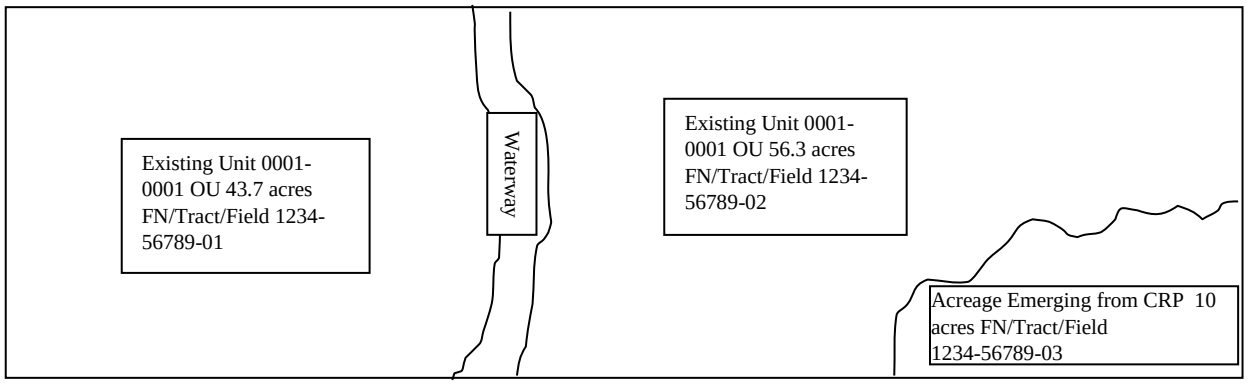


(a) 2019 APH Databases for Acreage Emerging From CRP Initial Year. The CRP acreage being added to the existing unit in 2019 requires a separate APH database the initial year it is added. The APH database for the acreage emerging from CRP must:

(i) Be identified with the database exception code 0001R and the yield indicator CR; and

(ii) Use 100 percent of the applicable T-Yield to establish the APH database when production prior to enrollment in CRP is not available.

**EXISTING UNIT APH DATABASE**

| 2019 | NI - 003 | AO - 095 | |
|---|---|---|---|
| SB (0081) | Unit 0001-0001 OU | | |
| YEAR | PRODUCTION | ACRES | YIELD |
| 2015 | 4500 | 100.0 | A 45 |
| 2016 | 5500 | 100.0 | A 55 |
| 2017 | 4000 | 100.0 | A 40 |
| 2018 | 3500 | 100.0 | A 35 |
| | | Total | 175/4 |
| T-Yield 30 | Approved Yield | | 44 |

**ACREAGE EMERGING FROM CRP APH DATABASE**

| 2019 | NI - 003 | AO - 095 | Yield Indicator - CR |
|---|---|---|---|
| SB (0081) | Unit 0001-0001 OU | | EC – 001R |
| YEAR | PRODUCTION | ACRES | YIELD |
| 2015 | | | C30 |
| 2016 | | | C30 |
| 2017 | | | C30 |
| 2018 | | | C30 |
| | | Total | 120/4 |
| T-Yield 30 | Approved Yield | | 30 |

**D. …Emerging from USDA Program, New Breaking, and Native Sod Examples (Continued)**

(b) 2019 Acreage Report for Acreage Emerging From CRP (Initial Year). Acreage emerging from CRP must be reported separately on the acreage report by Farm/Tract/Field number.

| CROP YEAR | UNIT # | FN/TRACT/FIELD(S) | ACRES | |
|---|---|---|---|---|
| 2019 | 0001-0001 OU | 1234-56789-01, 02 | 100 | Existing Acreage in OU |
| 2019 | 0001-0001 OU | 1234-56789-03 | 10 | Emerging Acreage from CRP |

(c) 2020 Production Report for Acreage Emerging From CRP. In 2019 the insured did not have a loss and reports total production for unit 0001-0001 OU as follows:

| CROP YEAR | UNIT # | FN/TRACT/FIELD(S) | ACRES | PRODUCTION |
|---|---|---|---|---|
| 2020 | 0001-0001 OU | 1234-56789-01, 02, 03 | 110 | 3520 |

(d) In 2020, the APH databases for the existing unit and the acreage from CRP are combined and the exception code for multiple APH databases for a OU/P/T/TMA is no longer used, nor the CR yield indicator.

**RESULTING APH DATABASE**

| | | | |
|---|---|---|---|
| 2020 | NI - 003 | AO – 095 | |
| SB (0081) | Unit 0001-0001 OU | | |
| YEAR | PRODUCTION | ACRES | YIELD |
| 2015 | 4500 | 100.0 | A45 |
| 2016 | 5500 | 100.0 | A55 |
| 2017 | 4000 | 100.0 | A40 |
| 2018 | 3500 | 100.0 | A35 |
| 2019 | 3520 | 110.0 | A32 |
| | | | 207/5 |
| T-Yield 30 | Approved Yield | | 41 |

(e) For the 2020 Acreage Report, the acreage that emerged from CRP the prior year must be reported by Farm/Tract/Field number.

| CROP YEAR | UNIT # | FN/TRACT/FIELD(S) | ACRES |
|---|---|---|---|
| 2020 | 0001-0001 OU | 1234-56789-01, 02, 03 | 110 |

(3) **Example 2.** The insured has provided production history for the acreage prior to enrollment in CRP. The year the acreage emerges from CRP, a separate APH database must be established for the acreage emerging from CRP and the acreage must be reported by Farm/Tract/Field number.

**D. …Emerging from USDA Program, New Breaking, and Native Sod Examples (Continued)**

(a) 2019 Production Report for the Acreage Emerging from CRP and recertifying prior year's production. The acreage was planted and insured in 2005-2008 prior to enrollment in CRP and the insured recertifies production for those crop years. The insured had 65 total acres which were farmed as one unit 2005-2008. In 2008, the insured enrolled 15 acres in CRP.

| CROP YEAR | UNIT # | FN/TRACT/FIELD(S) | ACRES | PRODUCTION |
|---|---|---|---|---|
| 2018 | 0001-0002 OU | 1234-98765-01 | 50 | 1750 |
| 2008 | 0001-0002 OU | 1234-98765-01, 02, 03 | 65 | 1820 |
| 2007 | 0001-0002 OU | 1234-98765-01, 02, 03 | 65 | 1690 |
| 2006 | 0001-0002 OU | 1234-98765-01, 02, 03 | 65 | 2145 |
| 2005 | 0001-0002 OU | 1234-98765-01, 02, 03 | 65 | 1365 |

(b) 2019 APH Databases for Acreage Emerging from CRP and prior years recertified production. The insured recertifies production for the years prior to enrollment in CRP. The CRP acreage being added to the existing unit in 2019 requires a separate APH database the initial year it is added. The APH database for the acreage emerging from CRP must:

(i) be identified with the database exception code 001R and the yield indicator code CR; and

(ii) use production history for years prior to enrollment to CRP to establish the APH database.

**D. …Emerging from USDA Program, New Breaking, and Native Sod Examples (Continued)**

**EXISTING UNITS APH DATABASE**

| 2019 | NI - 003 | AO - 095 | |
|---|---|---|---|
| SB (0081) | Unit 0001-0002 OU | | |
| YEAR | PRODUCTION | ACRES | YIELD |
| 2009 | 1500 | 50.0 | A30 |
| 2010 | 2750 | 50.0 | A55 |
| 2011 | 2100 | 50.0 | A42 |
| 2012 | 2250 | 50.0 | A45 |
| 2013 | 1900 | 50.0 | A38 |
| 2014 | 2000 | 50.0 | A40 |
| 2015 | 2550 | 50.0 | A51 |
| 2016 | 2350 | 50.0 | A47 |
| 2017 | 2200 | 50.0 | A44 |
| 2018 | 1750 | 50.0 | A35 |
| | | Total | 427/10 |
| T-YIELD 30 | APPROVED YIELD | | 43 |

**ACREAGE EMERGING FROM CRP APH DATABASE**

| 2019 | NI – 003 | AO - 095 | Yield Indicator - CR |
|---|---|---|---|
| SB (0081) | Unit 0001-0002 OU | | EC - 001R |
| YEAR | PRODUCTION | ACRES | YIELD |
| | | | |
| | | | |
| | | | |
| | | | |
| | | | |
| | | | |
| 2005 | 1365 | 65.0 | A21 |
| 2006 | 2145 | 65.0 | A33 |
| 2007 | 1690 | 65.0 | A26 |
| 2008 | 1820 | 65.0 | A28 |
| | | Total | 108/4 |
| T-YIELD 30 | APPROVED YIELD | | 27 |

(c) 2019 Acreage Report for Acreage Emerging from CRP. Acreage emerging from CRP must be reported separately on the acreage report by Farm/Tract/Field number.

| CROP YEAR | UNIT # | FN/TRACT/FIELD | ACRES | |
|---|---|---|---|---|
| 2019 | 0001-0002 OU | 1234-98765-01 | 50 | Existing Acreage in OU |
| 2019 | 0001-0002 OU | 1234-98765-02, 03 | 15 | Emerging Acreage from CRP |

(d) 2020 Production Report for Acreage Emerging from CRP. In 2019, the insured did not have a loss and reports total production for unit 0001-0002 OU.

| CROP YEAR | UNIT # | FN/TRACT/FIELD(S) | ACRES | PRODUCTION |
|---|---|---|---|---|
| 2019 | 0001-0002 OU | 1234-98765-01, 02, 03 | 65 | 2015 |

(e) In 2020, the APH databases for the existing unit and the acreage from CRP are combined and the exception code for multiple APH databases for an OU/P/T/TMA is no longer used.

**D. …Emerging from USDA Program, New Breaking, and Native Sod Examples (Continued)**

**RESULTING APH DATABASE**

| 2020 | NI - 003 | AO - 095 | |
|---|---|---|---|
| SB (0081) | Unit 0001-0002 OU | | |
| YEAR | PRODUCTION | ACRES | YIELD |
| 2010 | 2750 | 50.0 | A55 |
| 2011 | 2100 | 50.0 | A42 |
| 2012 | 2250 | 50.0 | A45 |
| 2012 | 1900 | 50.0 | A38 |
| 2014 | 2000 | 50.0 | A40 |
| 2015 | 2550 | 50.0 | A51 |
| 2016 | 2350 | 50.0 | A47 |
| 2017 | 2200 | 50.0 | A44 |
| 2018 | 1750 | 50.0 | A35 |
| 2019 | 2015 | 65.0 | A31 |
| | | | 428/10 |
| T-YIELD 30 | APPROVED YIELD | | 43 |

(f) For the 2020 Acreage Report, the acreage that emerged from CRP the prior year must be reported by Farm/Tract/Field number.

| CROP YEAR | UNIT # | FN/TRACT/FIELD | ACRES |
|---|---|---|---|
| 2020 | 0001-0002 OU | 1234-98765-01, 02, 03 | 65 |

(4) **Example 3.** The insured has acreage that was broken out of pasture in September 2018 and has submitted a new breaking WA to the RMA RO. The new breaking acreage is being added to existing unit 0001-0003 OU.

The year the new breaking acreage is broken out, a separate APH database must be established for the acreage from the new breaking WA and the acreage must be reported by Farm/Tract/Field number.

(a) The new breaking acreage being added to the existing unit in 2019 requires a separate APH database the initial year it is added. The new breaking acreage APH database must be identified with the database exception code 0001N and the yield indicator code NB.

In the example below the RO provided the insured with 70 percent of the applicable county T-Yield for that county/crop/P/T/TMA on the accepted WA. The actuarial documents provide a T-Yield of 30 bushels an acre (0.70 x 30 = 21 bushels an acre).

**D. …Emerging from USDA Program, New Breaking, and Native Sod Examples (Continued)**

**EXISTING UNIT APH DATABASE**

| 2019 | NI - 003 | AO - 095 | |
|---|---|---|---|
| SB (0081) | Unit 0001-0003 OU | | |
| YEAR | PRODUCTION | ACRES | YIELD |
| 2015 | 4000 | 80.0 | A50 |
| 2016 | 3520 | 80.0 | A44 |
| 2017 | 3760 | 80.0 | A47 |
| 2018 | 4480 | 80.0 | A56 |
| | | Total | 197/4 |
| T-Yield 30 | Approved Yield | | 49 |

**NEW BREAKING WA APH DATABASE**

| 2019 | NI - 003 | AO - 095 | Yield Indicator - NB |
|---|---|---|---|
| SB (0081) | Unit 0001-0003 OU | | EC – 001N |
| YEAR | PRODUCTION | ACRES | YIELD |
| 2015 | | | F21 |
| 2016 | | | F21 |
| 2017 | | | F21 |
| 2018 | | | F21 |
| | | Total | 84/4 |
| T-Yield 30 | Approved Yield | | 21 |

(b) 2019 Acreage Report for New Breaking WA. New breaking acreage must be reported separately by Farm/Tract/Field number.

| CROP YEAR | UNIT # | FN/TRACT/FIELD(S) | ACRES | |
|---|---|---|---|---|
| 2019 | 0001-0003 OU | 1234-54321-01 | 80.0 | Acreage in existing unit |
| 2019 | 0001-0003 OU | 1234-54321-02 | 40.0 | New breaking WA acreage |

(c) 2019 Production Report for New Breaking WA. In 2017, the insured did not have a loss and reports total production for unit 0001-0003 OU.

| CROP YEAR | UNIT # | FN/TRACT/FIELD(S) | ACRES | PRODUCTION |
|---|---|---|---|---|
| 2020 | 0001-0003 OU | 1234-54321-01, 02 | 120.0 | 5880 |

(d) In 2020, the APH databases for the existing unit and the acreage from a new breaking WA are combined and the exception code for multiple APH databases for an OU/P/T/TMA is no longer used, nor the yield indicator NB.

**D. …Emerging from USDA Program, New Breaking, and Native Sod Examples (Continued)**

Resulting APH Database

| 2020 | NI - 003 | AO - 095 | |
|---|---|---|---|
| SB (0081) | Unit 0001-0003 OU | | |
| Year | Production | Acres | Yield |
| 2015 | 4000 | 80.0 | A50 |
| 2016 | 3520 | 80.0 | A44 |
| 2017 | 3760 | 80.0 | A47 |
| 2018 | 4480 | 80.0 | A56 |
| 2019 | 5880 | 120.0 | A49 |
| | | | 246/5 |
| T-Yield 30 | Approved Yield | | 49 |

(e) CY 2020 acres for unit 0001-0003 OU must be reported by Farm/Tract/Field number.

| CROP YEAR | UNIT # | FN/TRACT/FIELD(S) | ACRES |
|---|---|---|---|
| 2020 | 0001-0003 OU | 1234-54321-01, 02 | 120.0 |

(5) **Example 4.** The insured has acreage in Iowa that was tilled in September 2018 and has submitted a new breaking WA to the RMA RO. However, the insured cannot substantiate that the acreage has been previously tilled and planted for the production of a crop. Since the new breaking acreage is in Iowa and cannot be substantiated, the acreage is considered native sod. The acreage is being added to existing optional unit 0001-0003 OU.

The year the native sod acreage is tilled separate APH database(s) must be established for the acreage from the new breaking WA and the acreage must be reported by FN/Tract/Field number.

**Year 1:**

(a) The native sod acreage being added to the existing unit in 2019 requires separate APH database(s) the first four crop years planted to an annual crop. The native sod acreage APH database must be identified with the multiple database exception code D and the yield indicator code SB. The native sod APH database must also be submitted with the yield limitation flag of "04" which requires the rate yield to equal the approved yield.

In the example below, the RO provided the insured with 65 percent of the applicable county T-Yield for that county/crop/P/T/TMA on the accepted WA needed to allow the acreage to be insurable the initial year of planting. The actuarial documents provide a T-Yield of 35 bushels an acre for soybeans and 100 bushels an acre for corn. The resulting T-Yield provided by the WA is 23 bushels an acre for soybeans (0.65 x 35 = 22.75 = 23) and 65 bushels an acre for corn (0.65 x 100 = 65).

**D. …Emerging from USDA Program, New Breaking, and Native Sod Examples (Continued)**

**EXISTING UNIT APH DATABASE**

| 2019 | NI - 003 | AO - 095 | |
|---|---|---|---|
| Sbean (0081) | Unit 0001-0003 OU | | |
| YEAR | PRODUCTION | ACRES | YIELD |
| 2015 | 4000 | 80.0 | A50 |
| 2016 | 3520 | 80.0 | A44 |
| 2017 | 3760 | 80.0 | A47 |
| 2018 | 4480 | 80.0 | A56 |
| Rate Yield 49 | | Total | 197/4 |
| T-Yield 35 | Approved Yield | | 49 |

**NATIVE SOD APH DATABASE**

| 2019 | NI - 003 | AO - 095 | YI - SB |
|---|---|---|---|
| Sbean (0081) | Unit 0001-0003 OU | | EC – 001D |
| YEAR | PRODUCTION | ACRES | YIELD |
| 2015 | | | F23 |
| 2016 | | | F23 |
| 2017 | | | F23 |
| 2018 | | | F23 |
| Rate Yield 23 | | Total | |
| T-Yield 35 | Approved Yield | | 23 |

**EXISTING UNIT APH DATABASE**

| 2019 | NI – 003 | Grain – 016 | |
|---|---|---|---|
| Corn (0041) | Unit 0001-0003 OU | | |
| YEAR | PRODUCTION | ACRES | YIELD |
| 2015 | 24000 | 200.0 | A120 |
| 2016 | 11520 | 80.0 | A144 |
| 2017 | 29400 | 200.0 | A147 |
| 2018 | 10080 | 80.0 | A126 |
| Rate Yield 135 | | Total | 537/4 |
| T-Yield 100 | Approved Yield | | 134 |

**NATIVE SOD APH DATABASE**

| 2019 | NI – 003 | Grain – 016 | YI – SB |
|---|---|---|---|
| Corn (0041) | Unit 0001-0003 OU | | EC – 001D |
| YEAR | PRODUCTION | ACRES | YIELD |
| 2015 | | | F65 |
| 2016 | | | F65 |
| 2017 | | | F65 |
| 2018 | | | F65 |
| Rate Yield 65 | | Total | |
| T-Yield 100 | Approved Yield | | 65 |

(b) 2019 Acreage Report for New Breaking WA for Native Sod. The native sod acreage must be reported separately by FN/Tract/Field number. The acreage must be identified by the program indicator code of "NS" and the acreage type code of native sod insurable by WA.

| CROP YEAR (CY) | CROP | UNIT # | FN/TRACT/FIELD(S) | ACRES | ACREAGE TYPE | |
|---|---|---|---|---|---|---|
| 2019 | Sbean | 0001-0003 OU | 1234-54321-01 | 80.0 | Acreage in existing unit | |
| 2019 | Sbean | 0001-0003 OU | 1234-54321-02 | 40.0 | Insured native sod WA acreage | NS |
| 2019 | Corn | 0001-0003 OU | 1234-54321-03 | 200.0 | Acreage in existing unit | |

**Year 2:**

(c) 2020 Production Report for Native Sod. In 2019, the insured did not have a loss and is required to report the production from the native sod acreage separate on the production report for unit 0001-0003 OU.

**D. …Emerging from USDA Program, New Breaking, and Native Sod Examples (Continued)**

| CY | CROP | UNIT # | FN/TRACT/FIELD(S) | ACRES | PRODUCTION |
|---|---|---|---|---|---|
| 202019 | Sbean | 0001-0003 OU | 1234-54321-01 | 80.0 | 3680 |
| 2020 | Sbean | 0001-0003 OU | 1234-54321-02 | 40.0 | 1280 |
| 2020 | Corn | 0001-0003 OU | 1234-54321-03 | 200.0 | 26600 |

(d) In 2020, the native sod acreage is still required to have a separate APH database for each crop P/T/TMA. The insured plans to plant corn on the native sod acreage.

**EXISTING UNIT APH DATABASE**

| 2020 | NI – 003 | AO – 095 | |
|---|---|---|---|
| Sbean (0081) | Unit 0001-0003 OU | | |
| YEAR | PRODUCTION | ACRES | YIELD |
| 2015 | 4000 | 80.0 | A50 |
| 2016 | 8800 | 200.0 | A44 |
| 2017 | 3760 | 80.0 | A47 |
| 2018 | 11200 | 200.0 | A56 |
| 2019 | 3680 | 80.0 | A46 |
| Rate Yield 49 | | Total | 243/5 |
| T-Yield 35 | Approved Yield | | 49 |

**NATIVE SOD APH DATABASE**

| 2020 | NI – 003 | AO – 095 | YI – SB |
|---|---|---|---|
| Sbean (0081) | Unit 0001-0003 OU | | EC – 001D |
| YEAR | PRODUCTION | ACRES | YIELD |
| | | | |
| 2016 | | | T35 |
| 2017 | | | T35 |
| 2018 | | | T35 |
| 2019 | 1280 | 40.0 | A32 |
| Rate Yield 23 | | Total | |
| T-Yield 35 | Approved Yield | | 23 |

**EXISTING UNIT APH DATABASE**

| 2020 | NI – 003 | Grain – 016 | |
|---|---|---|---|
| Corn (0041) | Unit 0001-0003 OU | | |
| YEAR | PRODUCTION | ACRES | YIELD |
| 2015 | 24000 | 200.0 | A120 |
| 2016 | 11520 | 80.0 | A144 |
| 2017 | 29400 | 200.0 | A147 |
| 2018 | 10080 | 80.0 | A126 |
| 2019 | 26600 | 200 | A133 |
| Rate Yield 135 | | Total | 675/5 |
| T-Yield 100 | Approved Yield | | 135 |

**NATIVE SOD APH DATABASE**

| 2020 | NI – 003 | Grain – 016 | YI – SB |
|---|---|---|---|
| Corn (0041) | Unit 0001-0003 OU | | EC – 001D |
| YEAR | PRODUCTION | ACRES | YIELD |
| 2015 | | | T100 |
| 2016 | | | T100 |
| 2017 | | | T100 |
| 2018 | | | T100 |
| 2019 | | | Z0 |
| Rate Yield 65 | | Total | |
| T-Yield 100 | Approved Yield | | 65 |

(e) 2020 Acreage Report for Native Sod. The native sod acreage must be reported separately by FN/Tract/Field number. The acreage must be identified by the program indicator code of "NS" and the acreage type code of native sod insured under the terms of the policy.

**D. …Emerging from USDA Program, New Breaking, and Native Sod Examples (Continued)**

| CY | CROP | UNIT # | FN/TRACT/FIELD(S) | ACRES | ACREAGE TYPE | |
|---|---|---|---|---|---|---|
| 2020 | Corn | 0001-0003 OU | 1234-54321-01 | 80.0 | Acreage in existing unit | |
| 2020 | Corn | 0001-0003 OU | 1234-54321-02 | 40.0 | Insured terms of policy native sod acreage | NS |
| 2020 | Sbean | 0001-0003 OU | 1234-54321-03 | 200.0 | Acreage in existing unit | |

**Year 3:**

(f) 2021 Production Report for Native Sod. In 2020, the insured did not have a loss and is required to report the production from the native sod acreage separate on the production report for unit 0001-0003 OU.

| CY | CROP | UNIT # | FN/TRACT/FIELD(S) | ACRES | PRODUCTION |
|---|---|---|---|---|---|
| 2021 | Corn | 0001-0003 OU | 1234-54321-01 | 80.0 | 9520 |
| 2021 | Corn | 0001-0003 OU | 1234-54321-02 | 40.0 | 4240 |
| 2021 | Sbean | 0001-0003 OU | 1234-54321-03 | 200.0 | 7800 |

(g) In 2021, the native sod acreage is still required to have a separate APH database for each crop P/T/TMA. The insured plans to plant soybeans on the native sod acreage.

**EXISTING UNIT APH DATABASE**

| 2021 | NI - 003 | AO - 095 | |
|---|---|---|---|
| Sbean (0081) | Unit 0001-0003 OU | | |
| YEAR | PRODUCTION | ACRES | YIELD |
| 2015 | 4000 | 80.0 | A50 |
| 2016 | 8800 | 200.0 | A44 |
| 2017 | 3760 | 80.0 | A47 |
| 2018 | 11200 | 200.0 | A56 |
| 2019 | 3680 | 80.0 | A46 |
| 2020 | 7800 | 200.0 | A39 |
| Rate Yield 47 | | Total | 282/6 |
| T-Yield 35 | Approved Yield | | 47 |

**NATIVE SOD APH DATABASE**

| 2021 | NI - 003 | AO - 095 | YI - SB |
|---|---|---|---|
| Sbean (0081) | Unit 0001-0003 OU | | EC – 001D |
| YEAR | PRODUCTION | ACRES | YIELD |
| | | | |
| 2016 | | | T35 |
| 2017 | | | T35 |
| 2018 | | | T35 |
| 2019 | 1280 | 40.0 | A32 |
| 2020 | 0 | 0 | Z0 |
| Rate Yield 23 | | Total | |
| T-Yield 35 | Approved Yield | | 23 |

**D. …Emerging from USDA Program, New Breaking, and Native Sod Examples (Continued)**

**EXISTING UNIT APH DATABASE**

| 2021 | NI - 003 | Grain - 016 | |
|---|---|---|---|
| Corn (0041) | Unit 0001-0003 OU | | |
| YEAR | PRODUCTION | ACRES | YIELD |
| 2015 | 24000 | 200.0 | A120 |
| 2016 | 11520 | 80.0 | A144 |
| 2017 | 29400 | 200.0 | A147 |
| 2018 | 10080 | 80.0 | A126 |
| 2019 | 26600 | 200 | A133 |
| 2020 | 9520 | 80.0 | A119 |
| Rate Yield 132 | | Total | 790/6 |
| T-Yield 100 | Approved Yield | | 132 |

**NATIVE SOD APH DATABASE**

| 2021 | NI - 003 | Grain - 016 | YI - SB |
|---|---|---|---|
| Corn (0041) | Unit 0001-0003 OU | | EC – 001D |
| YEAR | PRODUCTION | ACRES | YIELD |
| | | | |
| 2016 | | | T100 |
| 2017 | | | T100 |
| 2018 | | | T100 |
| 2019 | | | Z0 |
| 2020 | 4240 | 40 | A106 |
| Rate Yield 65 | | Total | |
| T-Yield 100 | Approved Yield | | 65 |

(h) 2021 Acreage Report for Native Sod. The native sod acreage must be reported separately by FN/Tract/Field number. The acreage must be identified by the program indicator code of "NS" and the acreage type code of native sod insured under the terms of the policy.

| CY | CROP | UNIT # | FN/TRACT/FIELD(S) | ACRES | ACREAGE TYPE | |
|---|---|---|---|---|---|---|
| 2021 | Sbean | 0001-0003 OU | 1234-54321-01 | 80.0 | Acreage in existing unit | |
| 2021 | Sbean | 0001-0003 OU | 1234-54321-02 | 40.0 | Insured terms of policy native sod acreage | NS |
| 2021 | Corn | 0001-0003 OU | 1234-54321-03 | 200.0 | Acreage in existing unit | |

**Year 4:**

(i) 2022 Production Report for Native Sod. In 2021, the insured did not have a loss and is required to report the production from the native sod acreage separate on the production report for unit 0001-0003 OU.

| CY | CROP | UNIT # | FN/TRACT/FIELD(S) | ACRES | PRODUCTION |
|---|---|---|---|---|---|
| 2022 | Sbean | 0001-0003 OU | 1234-54321-01 | 80.0 | 3520 |
| 2022 | Sbean | 0001-0003 OU | 1234-54321-02 | 40.0 | 1480 |
| 2022 | Corn | 0001-0003 OU | 1234-54321-03 | 200.0 | 28200 |

(j) In 2022 the native sod acreage is still required to have a separate APH database for each crop P/T/TMA. The insured plans to plant corn on the native sod acreage.

**D. …Emerging from USDA Program, New Breaking, and Native Sod Examples (Continued)**

**EXISTING UNIT APH DATABASE**

| 2022 | NI – 003 | AO – 095 | |
|---|---|---|---|
| Sbean (0081) | Unit 0001-0003 OU | | |
| YEAR | PRODUCTION | ACRES | YIELD |
| 2015 | 4000 | 80.0 | A50 |
| 2016 | 8800 | 200.0 | A44 |
| 2017 | 3760 | 80.0 | A47 |
| 2018 | 11200 | 200.0 | A56 |
| 2019 | 3680 | 80.0 | A46 |
| 2020 | 7800 | 200.0 | A39 |
| 2021 | 3520 | 80.0 | A44 |
| Rate Yield 47 | | Total | 326/7 |
| T-Yield 35 | Approved Yield | | 47 |

**NATIVE SOD APH DATABASE**

| 2022 | NI – 003 | AO – 095 | YI – SB |
|---|---|---|---|
| Sbean (0081) | Unit 0001-0003 OU | | EC – 001D |
| YEAR | PRODUCTION | ACRES | YIELD |
| | | | |
| | | | |
| 2017 | | | T35 |
| 2018 | | | T35 |
| 2019 | 1280 | 40.0 | A32 |
| 2020 | 0 | 0 | Z0 |
| 2021 | 1480 | 40.0 | A37 |
| Rate Yield 23 | | Total | 133/4 |
| T-Yield 35 | Approved Yield | | 23 |

**EXISTING UNIT APH DATABASE**

| 2022 | NI – 003 | Grain – 016 | |
|---|---|---|---|
| Corn (0041) | Unit 0001-0003 OU | | |
| YEAR | PRODUCTION | ACRES | YIELD |
| 2015 | 24000 | 200.0 | A120 |
| 2016 | 11520 | 80.0 | A144 |
| 2017 | 29400 | 200.0 | A147 |
| 2018 | 10080 | 80.0 | A126 |
| 2019 | 26600 | 200 | A133 |
| 2020 | 9520 | 80.0 | A119 |
| 2021 | 28200 | 200.0 | A141 |
| Rate Yield 133 | | Total | 930/7 |
| T-Yield 100 | Approved Yield | | 133 |

**NATIVE SOD APH DATABASE**

| 2022 | NI – 003 | Grain – 016 | YI – SB |
|---|---|---|---|
| Corn (0041) | Unit 0001-0003 OU | | EC – 001D |
| YEAR | PRODUCTION | ACRES | YIELD |
| | | | |
| 2016 | | | T100 |
| 2017 | | | T100 |
| 2018 | | | T100 |
| 2019 | | | Z0 |
| 2020 | 4240 | 40 | A106 |
| 2021 | | | Z0 |
| Rate Yield 65 | | Total | 346/4 |
| T-Yield 100 | Approved Yield | | 65 |

(k) 2022 Acreage Report for Native Sod. The native sod acreage must be reported separately by FN/Tract/Field number. The acreage must be identified by the program indicator code of "NS" and the acreage type code of native sod insured under the terms of the policy.

| CY | CROP | UNIT # | FN/TRACT/FIELD(S) | ACRES | ACREAGE TYPE | |
|---|---|---|---|---|---|---|
| 2022 | Corn | 0001-0003 OU | 1234-54321-01 | 80.0 | Acreage in existing unit | |
| 2022 | Corn | 0001-0003 OU | 1234-54321-02 | 40.0 | Insured terms of policy native sod acreage | NS |
| 2022 | Sbean | 0001-0003 OU | 1234-54321-03 | 200.0 | Acreage in existing unit | |

**D. …Emerging from USDA Program, New Breaking, and Native Sod Examples (Continued)**

**Year 5 and Subsequent Years:**

(l) 2023 Production Report for Native Sod. In 2022, the insured did not have a loss and is required to report total production for unit 0001-0003 OU.

| CY | CROP | UNIT # | FN/TRACT/FIELD(S) | ACRES | PRODUCTION |
|---|---|---|---|---|---|
| 2023 | Corn | 0001-0003 | 1234-54321-01, 02 | 120.0 | 16440 |
| 2023 | Sbean | 0001-0003 | 1234-54321-03 | 200.0 | 10200 |

(m) In 2023, the APH databases for the existing unit and the native sod acreage are combined. The exception code for multiple APH databases for an OU/P/T/TMA and the yield indicator SB are no longer used.

**Resulting APH Database**

| 2023 | NI - 003 | AO - 095 | |
|---|---|---|---|
| Sbean (0081) | Unit 0001-0003 OU | | |
| Year | Production | Acres | Yield |
| 2015 | 4000 | 80.0 | A50 |
| 2016 | 8800 | 200.0 | A44 |
| 2017 | 3760 | 80.0 | A47 |
| 2018 | 11200 | 200.0 | A56 |
| 2019 | 4960 | 120.0 | A41 |
| 2020 | 7800 | 200.0 | A39 |
| 2021 | 5000 | 120.0 | A42 |
| 2022 | 10200 | 200.0 | A51 |
| Rate Yield 46 | | Total | 370/8 |
| T-Yield 35 | Approved Yield | | 46 |

**D. …Emerging from USDA Program, New Breaking, and Native Sod Examples (Continued)**

**Resulting APH Database**

| | | | |
|---|---|---|---|
| 2023 | NI - 003 | Grain - 016 | |
| Corn (0041) | Unit 0001-0003 OU | | |
| Year | Production | Acres | Yield |
| 2015 | 24000 | 200.0 | A120 |
| 2016 | 11520 | 80.0 | A144 |
| 2017 | 29400 | 200.0 | A147 |
| 2018 | 10080 | 80.0 | A126 |
| 2019 | 26600 | 200 | A133 |
| 2020 | 13760 | 120.0 | A115 |
| 2021 | 28200 | 200.0 | A141 |
| 2022 | 16440 | 120.0 | A137 |
| Rate Yield 133 | | Total | 1063/8 |
| T-Yield 100 | Approved Yield | | 133 |

(n) CY 2023 acres for unit 0001-0003 OU must be reported by FN/Tract/Field number.

| CY | CROP | UNIT # | FN/TRACT/FIELD(S) | ACRES |
|---|---|---|---|---|
| 2023 | Sbean | 0001-0003 OU | 1234-54321-01, 02 | 120.0 |
| 2023 | Corn | 0001-0003 OU | 1234-54321-03 | 200.0 |

## E. Cup Applicability Chart

The following chart illustrates when approved APH yields are eligible for cups, if YC is elected and the insured does not op-out of having cup apply to an APH database.

| SITUATION | ELIGIBLE FOR CUP? |
|---|---|
| New insured | No |
| Carryover insured updates with most recent year's history | Yes |
| Most recent year was zero planted and existing APH database contains actual history | Yes |
| Most recent year was zero planted and existing APH database does not contain actual history | No |
| Carryover insured provides additional years of history besides most recent | No |
| Yield floor is higher than cup | No |
| Published T-Yield change is less than a 10% decrease | Yes |
| Published T-Yield change is greater than a 10% decrease & T-Yield(s) are needed to complete the 4-year APH database. | No |
| Published T-Yield change is greater than a 10% decrease & T-Yield is not needed to complete the APH database (at least 4-years of yields) | Yes |
| Other revisions to previously approved yields | No |
| Other special cases | No |
| Prior year's approved APH yield used yield floor | Yes |
| Prior year's approved APH yield used yield substitution | Yes |
| Prior year's approved APH yield used yield exclusion | Yes |
| Yield exclusion applies to current year's APH database. | Yes |
| Yield adjustment applies to current year's APH database. | Yes |

## F. Recording and Maintaining SA T-Yields

(1) Example of Added Land with Records Combined with an Existing Unit.

The following example illustrates combining an existing unit's database and added land with records into a single unit database. Both databases contain actual and/or assigned yields and cannot be further divided into OUs. The insured share-rented another farm (FSA FN) from the same landlord who was insured the previous (policy) crop year and who has an established database.

**Previous (Policy) Crop Year Databases (2018)**

| ADDED LAND/LANDLORD A | | | |
|---|---|---|---|
| **2018** | **UNIT 0001-0000 NI FAC** Sec.10 | | |
| YEAR | PROD. | ACRES | YIELD |
| 2014 | 640 | 40.0 | A16 |
| 2015 | 700 | 50.0 | A14 |
| 2016 | 1200 | 60.0 | A20 |
| 2017 | 880 | 40.0 | A22 |

| EXISTING UNIT/LANDLORD A | | | |
|---|---|---|---|
| **2018** | **UNIT 0001-0000 NI FAC** Sec.10 | | |
| YEAR | PROD. | ACRES | YIELD |
| 2014 | 1400 | 70.0 | A20 |
| 2015 | 2880 | 90.0 | A32 |
| 2016 | 1680 | 60.0 | A28 |
| 2017 | 1920 | 80.0 | A24 |

| STEP | ACTION |
|---|---|
| **1** | The 2019 production report indicates for the 2018 crop year: NI FAC with 3,000 bu. production, 100.0 actual acres and a 30 bu. average yield. |
| **2** | Actual acres and production are combined. |
| **3** | The actual yields are totaled and divided by five to determine the preliminary/approved APH yield. |

| Year | | |
|---|---|---|
| | **2040** | **110.0** |
| 2014 | (640[Bu] + 1400[Bu]) ÷ (40.0 [acres] + 70.0[acres]) = **19** | |
| | **3580** | **140.0** |
| 2015 | (700[Bu] + 2880[Bu]) ÷ (50.0 [acres] + 90.0[acres]) = **26** | |
| | **2880** | **120.0** |
| 2016 | (1200[Bu] + 1680[Bu]) ÷ (60.0[acres] + 60.0[acres]) = **24** | |
| | **2800** | **120.0** |
| 2017 | (880[Bu] + 1920[Bu]) ÷ (40.0[acres] + 80.0[acres]) = **23** | |

## F. Recording and Maintaining SA T-Yields (Continued)

(1) Example of Added Land with Records Combined with an Existing Unit (continued)

| | 2019 | UNIT 0001-0000 | | NI FAC |
|---|---|---|---|---|
| STEP | YEAR | PROD. | ACRES | YIELD |
| STEP 2 | 2014 | 2040 | 110 | A19 |
| STEP 2 | 2015 | 3580 | 140.0 | A26 |
| STEP 2 | 2016 | 2880 | 120.0 | A24 |
| STEP 2 | 2017 | 2800 | 120.0 | A23 |
| **STEP 1** | **2018** | 3000 | 30.0 | **A30** |
| STEP 3 | | | Total | 122/5=24 |
| | | | APH | 24 |

(2) Example of Separate APH Database Required

The following example illustrates establishing current databases for a BU. The added land did not have records, exceeded cropland acreage limitations but did not exceed the 2000 cropland acreage maximum, and the RMA RO did not authorize the use of the existing unit's APH yield for the added land.

**Current Crop Year Databases (2019)**

| EXISTING UNIT/100 PERCENT | | | |
|---|---|---|---|
| **2019** | **UNIT 0001-0000** | | **NI FAC** |
| YEAR | PROD. | ACRES | YIELD |
| 2014 | 2200 | 55.0 | A40 |
| 2015 | | 0.0 | Z |
| 2016 | | 40.5 | P15 |
| 2017 | 2520 | 60.0 | A42 |
| 2018 | 1210 | 50.0 | A20 |
| | | Total | 117/4=29 |
| | | APH | 29 |

| ADDED LAND/CASH RENTED | | | |
|---|---|---|---|
| **2019** | **UNIT 0001-0000** | | **NI FAC** |
| YEAR | PROD. | ACRES | YIELD |
| 2014 | | | |
| 2015 | | | T17 |
| 2016 | | | T17 |
| 2017 | | | T17 |
| 2018 | | | T17 |
| | | Total | 68/4=17 |
| | | APH | 17 |

For the subsequent crop year, the insured provides separate production reports and requests separate OUs.

## F. Recording and Maintaining SA T-Yields (Continued)

**Subsequent Crop Year Databases (2020)**

| EXISTING UNIT/ 100 PERCENT | | | |
|---|---|---|---|
| **2020** | **UNIT 0001-0001** | | **NI FAC** |
| YEAR | PROD. | ACRES | YIELD |
| 2014 | 2200 | 55.0 | A40 |
| 2015 | | 0.0 | Z |
| 2016 | | 40.5 | P15 |
| 2017 | 2520 | 60.0 | A42 |
| 2018 | 1210 | 50.0 | A20 |
| 2019 | 1280 | 40.0 | 32 |
| | | Total | 149/5=30 |
| | | APH | 30 |

| ADDED LAND/ CASH RENTED | | | |
|---|---|---|---|
| **2020** | **UNIT 0001-0002** | | **NI FAC** |
| YEAR | PROD. | ACRES | YIELD |
| 2014 | | | |
| 2015 | | | |
| 2016 | | | T17 |
| 2017 | | | T17 |
| 2018 | | | T17 |
| 2019 | 3300 | 150.0 | A22 |
| | | Total | 73/4=18 |
| | | APH | 18 |

## G. Special APH Instructions for Contract Seed Beans and Contract Seed Peas

[Examples 2, 3, 4 do not have the applicable current crop year RYAFs. The RMA RO issues them in early March for each current crop year. Current crop year RYAFs must be used when calculating approved APH yields.]

(1) Instructions for Use of the Multi-Purpose Production Yield Report Worksheet

Enter each crop year's respective RYAF in col. 1 of the Multi-purpose Production and Yield Report Worksheet. If fewer than four years of production have been certified, enter the appropriate RYAF for factoring T-Yields to complete a four-year database. The factored T-Yields are also applicable in calculating Yield Floors.

When using T-Yields with the RYAF, the published T-Yield is multiplied:

(a) by the RYAF for the crop year designated by the double asterisk in the published RYAF document for the applicable crop year [$580 - see example]; and

(b) by the applicable variable T-Yield percentage factor. Individual year RYAF's are not used to adjust the T-Yields except as stated above.

(c) With an appropriate factor for deriving the variable T-Yield, YA, or Yield Floor value, substitute yields calculated according to Part 15 Section 3 APH Yield Adjustment procedure are also entered in Col. 18; see also (l) below.

**G. Special APH Instructions for Contract Seed Beans and Contract Seed Peas (Continued)**

(d) Representing a 100 percent share equivalent basis, enter the total dollars received (or value of, e.g., production utilized as feed, assigned yields multiplied times acres, etc.,) for each crop year in Col. 2 of the worksheet. If fewer than four-years of production have been certified, use the factored T-Yield to complete a four year database. Do not consider a year with zero planted acres a year with actual production.

(e) Multiply the RYAF in col. 1 times total dollars, in Col. 2, and enter the resulting product in Col. 3. Transfer the factored dollar value(s) (Col. 3) to Total Production Column on the APH form. Refer to Exh. 17 below for using a standard RYAF when calculating current crop year equivalent T-Yields.

(f) Enter the planted acres in the Acres Column on the APH form for each crop year certified.

(g) Divide factored dollars (Col. 16) by planted acres (Col. 17) and enter resulting quotient in the Yield Column (18) on the APH form.

(h) Total the factored average dollar values (Col. 18) and enter the total in the Total Block (19) on the APH form.

(i) Divide the total (Block 19) by the number of years that have yields, including T-Yields (Col. 18). Enter the result in the Preliminary Yield Block (20 (A)) on the APH form as the preliminary yield in whole dollars per acre.

(j) To express the prior year's approved yield in current dollars-per-acre equivalent, multiply the previous year's approved APH yield (in dollars per acre) by the most recent year's RYAF. See block 20 (B) in (2) below, Multi-Purpose Production Report Example.

(k) Cups, if elected,, apply to carryover policies. Multiply the previous year's approved APH yield (in dollars per acre) by the most recent year's RYAF and 90 percent, and then compare it to the current year's preliminary yield. If necessary, apply the cup and enter the approved APH yield.

(l) APH Yield Adjustment, see Part 15 Section 3. The substitute yield is derived by multiplying the applicable published T-Yield by the RYAF for the crop year designated within the published RYAF document by 60 percent. For crop years with double asterisk (**) and prior, use the single asterisk (*) year’s factor; T-Yields for crop years AFTER the double asterisks are expressed in double asterisks year dollar equivalents and are therefore adjusted by the double asterisks year; see example (4) below.

## G. Special APH Instructions for Contract Seed Beans and Contract Seed Peas (Continued)

(m) Assigned Yield. If the insured fails to report production, and an assigned yield (75 percent of the prior year's production) is needed, then: any assigned yield should be recorded / stored as initially determined and then factored by the RYAF corresponding to the crop year grown, since that is the year the dollar amount per acre is expressed as.

**Example:** An insured's Approved APH Yield for 2018 was 520 $/ac.; insured fails to report timely by PRD; assigned yield of 390 $/ac. (75 percent of 520) is assigned and stored in the APH Database; the 390 $/ac. is factored in subsequent crop years by the RYAF corresponding to the 2018 crop year.

(n) For Production and Yield Reports for carryover policies, actual dollars are entered in the column labeled "total dollars."

Final factored average dollar per acre is calculated by dividing "total dollars" by "planted acres" and multiplying times the RYAF. The resulting value is entered in the column labeled "average value."

(o) It is necessary to convert the approved APH yield from dollars per acre ($/A) to pounds per acre (#/A) for entry on the acreage report. Divide the approved APH yield by the contract price(s) per pound. A separate line entry is required for each different contract price.

**Note:** When performing mathematical calculations within a year, round only at the completion of all calculations for the given year (including (k) above).

(2) Multi-Purpose Production Report Example

Use this worksheet to determine the factored production to be entered on the APH database.

**Example:** Magic Valley Idaho producer of Contract Seed Beans

| **CROP YEAR** | **1** | **2** | **3** | **4** | **5** | **6** |
|---|---|---|---|---|---|---|
| | RYAF | TOT $ | FAC $ | | | |
| 20XX | 1.47 | 9450 | 13892 | | | |
| 20XX | 1.46 | 10580 | 15447 | | | |
| 20XX | 1.39 | ---- | ---- | | | |
| 20XX | 0.99 | 21027 | 20817 | | | |
| FACTORED T-YIELD | **1.58 | T-580 | F916 | | | |

## G. Special APH Instructions for Contract Seed Beans and Contract Seed Peas (Continued)

<table>
<tr><td>6 CROP<br>Dry Beans<br>(0047)</td><td>7 SECTION</td><td>36</td><td></td><td>15<br>CROP<br><br>YEAR</td><td>16 TOTAL<br>PRODUCTION<br>*</td><td>17 ACRES</td><td>18<br>YIELD</td></tr>
<tr><td>PRACTICE<br>IRR. (002)</td><td>TWNSHP</td><td>10S</td><td></td><td></td><td></td><td></td><td></td></tr>
<tr><td>TYPE<br>C.S.B. (062)</td><td>RANGE</td><td>10W</td><td></td><td></td><td></td><td></td><td></td></tr>
<tr><td>UNIT NO.<br>0002-0000</td><td colspan="2">LAND OTHER COUNTY YES<br>NO</td><td></td><td></td><td></td><td></td><td></td></tr>
<tr><td colspan="3" rowspan="2">8 OTHER PERSON(S)<br><br>NONE</td><td>FSA FN</td><td></td><td></td><td></td><td></td></tr>
<tr><td>1001</td><td></td><td></td><td></td><td></td></tr>
<tr><td>9 RECORD<br>TYPE:</td><td>CROP<br>YEAR:</td><td></td><td></td><td>20XX</td><td></td><td>**2002<br>RYAF</td><td>F916</td></tr>
<tr><td colspan="3" rowspan="5">PRODUCTION SOLD/COMMERCIAL STORAGE<br>ON FARM STORAGE, RECORDED BIN MEASUREMENT<br>LIVESTOCK FEEDING RECORDED APPRAISAL<br>FSA LOAN RECORD OTHER<br>NUMBER OF TREES OR VINES DY = 580<br>$/Ac.<br>2002 equiv.</td><td></td><td>20XX</td><td>13892</td><td>15.0</td><td>A926</td></tr>
<tr><td rowspan="4">13 RMA<br>YIELD:</td><td>20XX</td><td>15447</td><td>14.0</td><td>A1103</td></tr>
<tr><td>20XX</td><td></td><td></td><td>Z</td></tr>
<tr><td>20XX</td><td>20817</td><td>25.8</td><td>A807</td></tr>
<tr><td></td><td></td><td></td><td>19<br>TOTAL<br>3752</td></tr>
<tr><td colspan="2">10 PROCESSOR<br>NUMBER/NAME<br><br>*Factored $ Production</td><td>11 OTHER<br><br>Contract Prices .50, .60<br>(if available)</td><td>14<br>TRANSITIONAL<br>YIELD:<br>DY= 580<br>(1.58)= F916</td><td colspan="2">20 (A) PRELIMINARY<br>YIELD 938<br><br>20 (B) PRIOR YIELD<br>968<br>968 x 0.99 (2008 RYAF) =<br>958</td><td colspan="2">21 APPROVED APH<br>YIELD<br><br>(For Verifier use only)</td></tr>
</table>

## G. Special APH Instructions for Contract Seed Beans and Contract Seed Peas (Continued)

(3) APH, CSA (Contract Seed Beans) Example

XXXX DRY BEANS (047)
PRODUCTION REPORT

| | |
|---|---|
| NAME: GARDENSEED, GROWER<br>ADDRESS: RR # 1<br>TOWN, ST. ZIP<br>PHONE: (XXX)-XXX-XXXX<br>*(Magic Valley Idaho Example)* | ANY AGENT 99<br>ANY AIP 999<br><br>POLICY: XX-XXX-XXXXX<br>SSN/TAX NO.: XXX-XX-XXXX |
| SERVICE OFFICE: C. I. AGENT AGENT CODE: XXXXXXX<br>ADDRESS: 101 N. Main St.<br>Town, St. Zip<br>COMPANY: INS. AGENCY INC. COMPANY CODE: XXXXX | |
| UNIT NO. – 0002-0000 | FSA FN: XXXX |
| LEGAL DESCRIPTION: W½ 36 10S 16E<br>OTHER ENTITY: NONE<br>PROCESSOR NUMBER/NAME:<br>PRACTICE: IRRIGATED (002)<br>TYPE: CONTRACT SEED (062) | |

| CROP YEAR | REF YEAR ADJ FACTOR | TOTAL DOLLARS | FACTORED DOLLARS | PLANTED ACRES | FACTORED AVERAGE VALUE |
|---|---|---|---|---|---|
| XXXX | 1.53 | | | | |
| XXXX | 1.61 | | | | |
| XXXX | 0.61 | | | | |
| XXXX | 0.58 | | | | |
| XXXX | 1.54 | | | | |
| XXXX | 1.53 | | | 0.0 | F916 |
| XXXX | 1.47 | 9450 | 13892 | 15.0 | A926 |
| XXXX | 1.46 | 10580 | 15447 | 14.0 | A1103 |
| XXXX | 1.39 | 0 | 0 | 0.0 | Z |
| SUBTOTAL | | | | | |
| XXXX | 0.99 | 21027 | 20817 | 25.8 | A807 |

| | |
|---|---|
| AREA: TOTAL OF AVERAGE YIELDS<br>TRANSITIONAL YIELD: $580/A<br>PRIOR APPROVED APH YIELD<br>X RYAF = (1.58): 916<br>PRELIMINARY YIELD: 938 | 3752<br><br>APP. APH YIELD<br>938 |

Sample

For this example, the T-Yield is $580 per acre. The factored T-Yield is determined by multiplying the published T-Yield by the RYAF designated with the double asterisk on the RYAF document issued for the applicable crop year (since the published T-Yields are expressed in dollar equivalents for the designated crop year). The factored T-Yield shown in this example is determined as follows: T-Yield ($580/Acre x RYAF (1.58) = a factored T-Yield of $916. The factored T-Yield is then multiplied by the applicable variable T-Yield percentage factor.

## G. Special APH Instructions for Contract Seed Beans and Contract Seed Peas (Continued)

(4) Example of 20XX Reference (Base) Year Adjustment Factors

20XX REFERENCE (BASE) YEAR ADJUSTMENT FACTORS
Contract Seed (Wrinkled) Dry Peas

| | Crop Year | Columbia Basin | Palouse | Blue Mts. WA/OR | Treasure Valley | Magic Valley & South East Idaho |
|---|---|---|---|---|---|---|
| | 85 | 2.08 | 2.06 | 1.85 | - | 2.28 |
| | 86 | 2.14 | 2.07 | 1.87 | - | 2.41 |
| * | 87 | 2.13 | 2.10 | 1.98 | - | 2.50 |
| | 88 | 2.13 | 2.12 | 1.99 | - | 2.51 |
| | 89 | 1.79 | 1.86 | 1.74 | - | 2.15 |
| | 90 | 1.75 | 1.83 | 1.71 | - | 2.08 |
| | 91 | 1.82 | 1.81 | 1.74 | - | 2.18 |
| | 92 | 1.94 | 1.94 | 1.83 | - | 2.27 |
| | 93 | 1.82 | 1.80 | 1.75 | - | 2.19 |
| | 94 | 1.91 | 1.93 | 1.83 | - | 2.30 |
| | 95 | 1.80 | 1.79 | 1.73 | - | 2.13 |
| | 96 | 1.66 | 1.67 | 1.63 | - | 1.91 |
| | 97 | 1.69 | 1.67 | 1.63 | - | 2.00 |
| | 98 | 1.74 | 1.73 | 1.68 | - | 1.98 |
| | 99 | 1.86 | 1.88 | 1.81 | - | 2.11 |
| | 00 | 1.98 | 2.02 | 1.93 | - | 2.21 |
| | 01 | 1.95 | 2.03 | 1.92 | - | 2.24 |
| ** | 02 | 1.90 | 1.98 | 1.87 | - | 2.15 |
| | 03 | 1.71 | 1.74 | 1.68 | - | 1.87 |
| | 04 | 1.69 | 1.72 | 1.66 | - | 1.83 |
| | 05 | 1.76 | 1.81 | 1.71 | - | 1.89 |
| | 06 | 1.88 | 2.01 | 1.85 | - | 1.97 |
| | 07 | 1.52 | 1.56 | 1.50 | - | 1.68 |
| | 08 | 0.90 | 0.92 | 0.88 | - | 0.99 |

## G. Special APH Instructions for Contract Seed Beans and Contract Seed Peas (Continued)

(4) Example of 20XX Reference (Base) Year Adjustment Factors (continued)

| | | Contract Seed (BVGS) Dry Beans | | | | |
|---|---|---|---|---|---|---|
| | Crop Year | Columbia Basin | Palouse | Blue Mts. WA/OR | Treasure Valley | Magic Valley & South East Idaho |
| | 85 | 2.28 | - | - | 2.21 | 2.19 |
| | 86 | 2.33 | - | - | 2.31 | 2.25 |
| * | 87 | 2.27 | - | - | 2.37 | 2.30 |
| | 88 | 2.11 | - | - | 2.24 | 2.20 |
| | 89 | 1.62 | - | - | 1.66 | 1.64 |
| | 90 | 1.59 | - | - | 1.55 | 1.52 |
| | 91 | 1.64 | - | - | 1.71 | 1.70 |
| | 92 | 1.79 | - | - | 1.82 | 1.81 |
| | 93 | 1.66 | - | - | 1.73 | 1.72 |
| | 94 | 1.67 | - | - | 1.76 | 1.70 |
| | 95 | 1.62 | - | - | 1.64 | 1.60 |
| | 96 | 1.48 | - | - | 1.48 | 1.41 |
| | 97 | 1.45 | - | - | 1.51 | 1.45 |
| | 98 | 1.45 | - | - | 1.53 | 1.48 |
| | 99 | 1.51 | - | - | 1.58 | 1.53 |
| | 00 | 1.60 | - | - | 1.67 | 1.61 |
| | 01 | 1.61 | - | - | 1.66 | 1.61 |
| ** | 02 | 1.58 | - | - | 1.61 | 1.58 |
| | 03 | 1.56 | - | - | 1.6 | 1.54 |
| | 04 | 1.55 | - | - | 1.57 | 1.53 |
| | 05 | 1.49 | - | - | 1.5 | 1.47 |
| | 06 | 1.49 | - | - | 1.5 | 1.46 |
| | 07 | 1.43 | - | - | 1.44 | 1.39 |
| | 08 | 1.01 | - | - | 1.03 | 0.99 |

(**) Use for factoring current Determined Yields

(*) Use for factoring 2002 & prior Determined Yields

| | |
|---|---|
| Columbia Basin<br>Counties - Gilliam, Morrow - OR<br>Counties - Adams, Franklin, Grant, Lincoln - WA | Palouse<br>Counties - Benewah, Clearwater, Idaho, Kootenai, Latah, Lewis, Nez Perce - ID<br>Counties - Spokane, Stevens, Whitman - WA |
| Blue Mts. OR/WA<br>Counties - Umatilla, Union - OR<br>Counties - Asotin, Columbia, Garfield, Walla Walla - WA | Treasure Valley<br>Counties - Ada, Canyon, Owyhee, Payette, Washington - ID<br>Counties - Malheur - OR |
| Magic Valley<br>Counties - Blain, Cassia, Elmore, Gooding, Jerome, Lincoln, Minidoka, Twin Falls - ID | S.E. Idaho<br>Counties - Bannock, Bingham, Bonneville, Butte, Clark, Franklin, Fremont, Jefferson, Madison, Power - ID |

## H. Green Pea Example

I. M. Insured certified 10 years of production which included the contract price. The total production was determined by dividing the dollars received by the contract price for the tenderometer reading or sieve size shown on the actuarial table for the type of green peas on the unit. For the Dry Peas column, Dry pea production harvested from green pea acreage was added to the green pea production.

**GREEN PEA MULTIPURPOSE PRODUCTION AND YIELD WORKSHEET**

| | 1 | 2 | 3 | 4 | 5 | 6 |
|---|---|---|---|---|---|---|
| Crop year | Dollars Received for Crop | Contract Price for the TR Sieve number | Adjusted Production | Lbs. Dry Peas / .60 | Total Production | |
| 2009 | 4,783.80 | 0.05950 | 80,400 | | 80,400 | |
| 2010 | 2,565.00 | 0.06000 | 42,750 | | 42,750 | |
| 2011 | 4,559.75 | 0.06100 | 74,750 | | 74,750 | |
| 2012 | 4,875.00 | 0.06250 | 78,000 | | 78,000 | |
| 2013 | 2,929.50 | 0.06300 | 46,500 | | 46,500 | |
| 2014 | 7,010.29 | 0.07105 | 98,667 | 17,133 | 115,800 | |
| 2015 | 5,859.97 | 0.07145 | 82,015 | | 82,015 | |
| 2016 | 7,686.00 | 0.07000 | 109,800 | | 109,800 | |
| 2017 | 4,623.00 | 0.06900 | 67,000 | | 67,000 | |
| 2018 | 2,930.00 | 0.05860 | 50,000 | | 50,000 | |

## H. Green Pea Example (Continued)

### RESULTING APH DATABASE

| | | | | | | | |
|---|---|---|---|---|---|---|---|
| Insured's Name and Address:<br><br>I.M. Insured<br>Street<br>State, Zip<br><br>Phone Number: (XXX) XXX-XXXX<br><br>Identification Number: XXX-XX-XXXX | | | Required Field Review: (check one)<br>Yes □<br>No □<br><br>Required Inspection: (check one)<br>Yes □<br>No □<br><br>AIP Name and Address:<br><br>I.M. Company<br>Street<br>State, Zip | | Agent Name and Address:<br><br>I.M. Agent<br>Street<br>State, Zip<br><br>Phone Number: (XXX) XXX-XXXX<br><br>Agent Code: XXXXXX | | |
| Policy Number: XX-XXX-XXXX | | | State: Insured State (XX) | | County: Insured County (XXX) | | |
| Practice: I (002) | | | | Type: S (097) | | | |
| Irr. Practice: | Cropping Practice: | Organic Practice: | Interval: | Commodity Type: | Class: | Sub-class: | Intended use: |
| | | | | | | | |
| Crop Year: 2019 | | | Crop Year | | Total Production | Acres | Yield |
| Crop: Green Peas (0064) | | | 2009 | | 80,400 | 30.0 | A2,680 |
| | | | 2010 | | 42,750 | 15.0 | A2,850 |
| Unit Number: 0001-0000 | | | 2011 | | 74,750 | 25.0 | A2,990 |
| | | | 2012 | | 78,000 | 30.0 | A2,600 |
| | | | 2013 | | 46,500 | 15.0 | A3,100 |
| Others sharing in crop: | | | 2014 | | 115,800 | 40.5 | A2,859 |
| | | | 2015 | | 82,015 | 25.2 | A3,255 |
| Land Description: | | | 2016 | | 109,800 | 30.0 | A3,660 |
| | | | 2017 | | 67,000 | 20.0 | A3,350 |
| Section: XX<br>Township: XXXX<br>Range: XXXX<br>Other Land Identifier: | | | 2018 | | 50,000 | 20.0 | A2,500 |
| | | | Average Yield: 2984 | | Total: | | 29,844 |
| | | | | | Approved APH Yield: | | 2,984 |
| FSA Farm Number: XXXX<br>Tract Number: XXXXX<br>Field Number: XX<br>Cropland Acres: XXX | | | Preliminary Yield: 2984 | | Rate Yield: | | |
| | | | | | Prior Year Yield: | | |
| | | | T-Yield: 2800 | | Other: | | |
| | | | Yield Indicator: | | | | |

Sample

## I. Potato Example

In this example, I Am Insured certified the prior year's production. He had 20.0 acres of potatoes that made 4,761 CWT (238 CWT per acre). The verifier updated I Am Insured's database. I. M. Insured has an approved yield of 343 CWT at the applicable percentage factor for the current crop year.

**POTATOES MULTIPURPOSE PRODUCTION AND YIELD WORKSHEET**

| | 1 | 2 | 3 | 4 | 5 | 6 |
|---|---|---|---|---|---|---|
| **CROP YEAR** | **FRESH % NO. 1** | **FRESH % NO. 2 OR BETTER** | **PROCESSING % NO. 1** | **PROCESSING % NO. 2 OR BETTER** | | |
| 2015 | DP-50 | DP-60 | DP-50 | DP-85 | | |
| 2016 | DP-50 | DP-60 | DP-50 | DP-85 | | |
| 2017 | DP-50 | DP-60 | DP-50 | DP-85 | | |
| 2018 | DP-50 | DP-60 | DP-50 | AAP-92 | | |
| Avg. | 50 | 60 | 50 | 87 | | |

DP = Default Percentage from Actuarial Document. Not applicable to CAT.
AAP = Average Actual Percentage

**RESULTING APH DATABASE**

| | | | | | | | |
|---|---|---|---|---|---|---|---|
| Insured's Name and Address:<br>I.M. Insured<br>Street<br>State, Zip<br>Phone Number: (XXX) XXX-XXXX<br>Identification Number :XXX-XX-XXXX | | | Required Field Review: (check one)Yes □ No □<br>Required Inspection: (check one)<br>Yes □ No □<br>AIP Name and Address:<br>I.M. Company<br>Street<br>State, Zip | | Agent Name and Address:<br>I.M. Agent<br>Street<br>State, Zip<br>Phone Number: (XXX) XXX-XXXX<br>Agent Code: XXXXXX | | |
| Policy Number: XX-XXX-XXXX | | | State: Insured State (XX) | | County: Insured County (XXX) | | |
| Practice: I (002) | | | | Type: Group A (161) | | | |
| Irr. Practice: | Cropping Practice: | Organic Practice: | Interval: | Commodity Type | Class: | Sub-class: | Intended use: |
| | | | | | | | |

| Crop Year: 2019 | Crop Year | Total Production | Acres | Yield |
|---|---|---|---|---|
| Crop: Potatoes (0084) | 2009 | 0 | 0 | 0 |
| | 2010 | 3890 | 10.0 | A 389 |
| Unit Number: | 2011 | 8120 | 20.0 | A 406 |
| 0001-0000 | 2012 | 8340 | 20.0 | A 417 |
| | 2013 | 7260 | 20.0 | A 363 |
| Others sharing in crop: | 2014 | 7360 | 20.0 | A 368 |
| | 2015 | 5187 | 18.0 | A 288 |
| Land Description: | 2016 | 5390 | 18.0 | A 299 |
| Section: XX | 2017 | 6306 | 20.0 | A 315 |
| Township: XXXX | 2018 | 4761 | 20.0 | A 238 |
| Range: XXXX | Average Yield: | Total: | | 3083 |
| Other Land Identifier: | | Approved APH Yield: | | 343 |
| FSA Farm Number: XXXX | Preliminary Yield: 343 | Rate Yield: | | |
| Tract Number: XXXXX | | Prior Year Yield: | | |
| Field Number: XX | T-Yield: 320 | Other: | | |
| Cropland Acres: XXX | | | | |
| | Yield Indicator: | | | |

Sample

## J. Forage Production Underwriting Report

The forage CP provide that insurance will not attach on any acreage that does not have an adequate stand at the beginning of the insurance period. An adequate stand is a population of live forage plants that equals or exceeds the minimum required number of plants per square foot as shown in the SP.

The purpose of the Forage Production Underwriting Report is to identify each field and to certify basic information needed to determine type classification, unit structure, and insurability of the stand (age of stand and adequacy of plant count). This information will be used to update the APH form before requesting an Approved APH Yield for the upcoming crop year, and also to complete the acreage report:

(1) All insureds must complete the Forage Production Underwriting Report for each field of forage production and submit a copy of the report to the AIP before insurance attaches.

(2) Crop inspections, if needed, are made before the calendar date for the beginning of the insurance period.

(3) If a Claim for Indemnity was filed the preceding crop year and an adequate stand was determined, the Claim for Indemnity Report will be used to determine insurability.

If the insured does not complete the Forage Production Underwriting Report, or does not complete in an acceptable manner, AIPs must obtain the required information or deny coverage for the crop year. If the crop is damaged prior to application or the date insurance should have attached, the insurance does not attach.

## K. Elements and Information Required for Forage Production Underwriting Report

| ELEMENT | REQUIRED INFORMATION |
|---|---|
| **Insured's Name** | The name of the insured applying for the coverage. |
| **State** | State name where insured forage production is located. |
| **County** | County name where insured forage production is located. |
| **Crop Year** | 4-digit crop year, as defined in the policy. |
| **Policy Number** | Insured's policy number. |
| **Unit Number** | Unit number. |
| **FSA FN/Field ID** | The FSA farm number and Field ID. |
| **Legal Description Sec/Twp/Rng** | The legal description; Section, Township, and Range where forage production is located. |
| **Acres** | Total acres in field/subfield. |
| **Share** | Insured's share in the unit. |
| **Shareholder/Farm Name** | The name of the shareholder, if the insured's interest is less than 1.000 (100 percent). |
| **Date Seeded Mo/Yr** | The month and year the forage was seeded (land completely broken up and reworked). |

## K. …Forage Production Underwriting Report (Continued)

| ELEMENT | REQUIRED INFORMATION |
|---|---|
| **Forage Plants Per Sq. Ft.** | The number of forage plants per square foot. Calculate using the following steps:<br><br>**Step 1:** Select representative samples from each field or subfield. If the field/subfield consists of: 0.1-10.0 acres, select a minimum of three samples; 10.1-40.0 acres, select a minimum of 4 samples; add one additional sample for each additional 40.0 acres (or fraction thereof) in the field/subfield.<br><br>**Step 2:** Select a sample size (area in square feet, e.g., 1 square foot or 2 square feet, etc.) for all samples in the field/subfield. Identify samples in representative areas throughout the field (examples of measuring devices are contained in the FCIC-25150 Forage Loss Adjustment Standards Handbook).<br><br>**Step 3:** Count number of insurable live forage plants (alfalfa, clover or other insurable types shown on the actuarial documents, but not including grass plants) within each sample area. Compute average number of plants/square foot (total number of plants divided by total number of square feet for all samples within a field/subfield).<br><br>**Step 4:** Enter separate plant counts for each type that applies. |
| **Percent of ground cover, Alf/Clover/Other** | The percentage of the ground cover that is alfalfa, clover, or other insurable grass as determined by visual inspection. This is to be completed if the SP define a type as specified in terms of percentage of ground cover. |
| **Crop Practice** | Enter irrigated or non-irrigated. |
| **Plants Other Than Forage** | List other significantly occurring plants, i.e., grasses, such as brome grass or orchard grass; or weeds, such as cheat grass or kochia. |
| **Uninsurable Acres** | The number of acres based on the seeding date and stand information, rounded to tenths of an acre (overage or inadequate stand). |
| **Acres Seeded With Another Crop** | List the acreage that has been seeded with another crop different than those listed on this form. |
| **Remarks** | Any special information that clarifies items on this form. |
| **Insured's Signature** | The insured must sign this form. |
| **Date** | Date the insured signs this form. |
| **Agent's Signature** | Signature of agent after the insured has signed. |
| **Agent's Code** | Code number of Agent. |
| **Date** | Date the agent signs this form. |

## L. Forage Production Underwriting Report Example

| **INSURED'S NAME** | | | | | | | **STATE** | | **COUNTY** | | | **CROP YEAR** | | | **POLICY** | |
|---|---|---|---|---|---|---|---|---|---|---|---|---|---|---|---|---|
| I. M. Insured | | | | | | | XX | | XXX | | | 2019 | | | XXXXXXX | |
| **Unit Number** | **FSA FN/ Field ID** | **Legal Description Sec/Twp/Rng** | | | **Acres** | **Share** | **Shareholder/ Farm Name** | **Date Seeded Mo/Yr** | **Forage Plants Per Sq.Ft. Alf/Clover/Other** | | | **% of Ground Cover Alf/Clover/Other** | | | **Crop Practice** | **Plants Other Than Forage** |
| 0001-0001 | 1204 – 10,11 | 13 | 023N | 004W | 34.7 | 1.0 | | 05/19/14 | 7.0 | | | 0.60 | | 0.10 | Alfalfa - NI | Brome |
| 0001-0001 | 1204 - 12 | 13 | 023N | 004W | 12.3 | 1.0 | | 05/02/15 | 10.0 | | | 0.70 | | 0.10 | Alfalfa - NI | Brome |
| 0001-0001 | 1204 – 2, 3, 4, 9 | 13 | 023N | 004W | 23.6 | 1.0 | | 05/030/10 | 3.0 | | | 0.30 | | 0.20 | Alfalfa - NI | Brome |
| 0001-0001 | 1204 - 13 | 13 | 023N | 004W | 27.9 | 1.0 | | 05/18/16 | | 16.0 | 3.0 | | 0.80 | 0.20 | Red Clover - NI | Grass |
| 0001-0002 | 1204 - 14 | 14 | 024N | 004W | 4.9 | 1.0 | | 05/19/16 | 14.0 | | | 0.90 | | | Alfalfa – NI | |
| 0001-0002 | 1204 – 16, 17 | 14 | 024N | 004W | 22.8 | 1.0 | | 05/01/13 | | 9.0 | 4.0 | | 0.60 | 0.40 | Red Clover - NI | Grass |
| 0001-0002 | 1204 - 15 | 14 | 024N | 004W | 8.9 | 1.0 | | 05/01/15 | | 9.0 | 4.0 | | 0.60 | 0.40 | Red Clover - NI | Grass |
| | | | | | | | | | | | | | | | | |
| | | | | | | | | | | | | | | | | |

| **Uninsurable Acres** | **Acres Seeded With Another Crop** |
|---|---|
| Line 3 over age 23.6, Line 6 over age 22.8 = 46.4 total uninsurable acres | |

Remarks

| Insured's Signature | Date | Agent's Signature | Agent's Code | Date |
|---|---|---|---|---|
| | XX/XX/XXXX | | XXXXXX | XX/XX/XXXX |

SAMPLE

## M. Applicable Native Sod Annual Crops

(1) The following annual crops are applicable to the reduction in premium subsidy and the reduction in yield guarantee does not apply:

| | | |
|---|---|---|
| Annual Forage | Chile Peppers | Fresh Market Sweet Corn |
| Fresh Market Tomatoes* | Hybrid Corn Seed | Hybrid Sorghum Seed |
| Peppers | | |

*For the Dollar Amount of Insurance Plan only.

(2) The following annual crops are applicable to both the reduction in premium subsidy and the reduction in yield guarantee:

| | | |
|---|---|---|
| Barley | Buckwheat | Burley Tobacco |
| Cabbage | Camelina | Canola |
| Cigar Binder Tobacco | Cigar Filler Tobacco | Cigar Wrapper Tobacco |
| Corn | Cotton | Cotton Extra Long Staple |
| Cucumbers | Cultivated Wild Rice | Dark Air Tobacco |
| Dry Beans | Dry Peas | Fire Cured Tobacco |
| Flax | Flue Cured Tobacco | Fresh Market Beans |
| Fresh Market Tomatoes** | Grain Sorghum | Green Peas |
| Maryland Tobacco | Millet | Mustard |
| Oats | Onions | Peanuts |
| Popcorn | Potatoes | Processing Beans |
| Pumpkins | Rice | Rye |
| Safflower | Sesame | Silage Sorghum |
| Soybeans | Strawberries | Sugar Beets |
| Sugarcane | Sunflowers | Sweet Corn |
| Sweet Potatoes | Tomatoes | Triticale |
| Wheat | | |

**For the APH Plan of Insurance only.

(3) For crops insured under ARPI, the protection factor is limited to 65%.

(4) For Annual Forage, the productivity factor is limited to 65%.

## A. Apple Examples

Use the following PAW and the Actuarial Document on the Following Page to work through Examples 1-3 that follow.

| **PAW (Perennial Crops)**<br><br>**PRODUCER'S PRE-ACCEPTANCE WORKSHEET)** | | | | Name:<br>I. M. INSURED | | | Policy No.:<br>XXXX | Unit No.:<br>0001-0001 | Crop:<br>APPLES | State:<br>CO |
|---|---|---|---|---|---|---|---|---|---|---|
| | | | | Legal Description:<br>Sec. 31 T10N R50W | | | Crop Year:<br>2011 | County:<br>Montrose | FSA FN/TRACT/FIELD:<br>8912 | |
| Block No. | Mo/Year Planted or Grafted | Acres | Variety | Type | Number of Plants | Plant Spacing | Plant Pattern | Percent Stand | Density | Practice IRR/NI | Insurable or Uninsurable |
| 001 | 04/1992 | 2.2 | GOLDEN DEL | 111 | 475 | 10X20 | S | 99 | 218 | IRR | INS |
| 002 | 04/1992 | 3.2 | RED DEL | 111 | 690 | 10X20 | S | 99 | 218 | IRR | INS |
| 003 | 03/1999 | 1.7 | GOLDEN DEL | 111 | 371 | 10X20 | S | 100 | 218 | IRR | INS |
| 004 | 03/1999 | 0.7 | RED DEL | 111 | 153 | 10X20 | S | 100 | 218 | IRR | INS |
| 005 | 05/2000 | 1.4 | GOLDEN DEL | 111 | 305 | 10X20 | S | 100 | 218 | IRR | INS |
| 006 | 05/2000 | 3.8 | RED DEL | 111 | 692 | 12X20 | S | 100 | 182 | IRR | INS |
| 007 | 04/2006 | 5.3 | GALA | 111 | 1,802 | 8X16 | S | 100 | 340 | IRR | INS |
| TOTALS: | | 18.3 | | | 4,488 | | | | | | |

SAMPLE

## A. Apple Examples (Continued)

**T-Yield**

Year: 2011 Commodity: Apples (0054) State: Colorado (08)
Data: Released Plan: APH (90) County: Montrose (085)

| **Types / Practices** | |
|---|---|
| **Type** | Fresh 111 |
| **Practice** | Irrigated 002 |
| **Type/Practice # (T/P #)** | T/P 1 |

**Transitional Yield And YA Substitution Table (BU)**

| T/P # | Density | | Characteristic | Leaf | Sub | 2011 | 2010 | 2009 | 2008 | 2007 |
|---|---|---|---|---|---|---|---|---|---|---|
| | Low | High | Name | Year | County | | | | | |
| **T/P 1** | 152 | 299 | | 6 | | 200.00 | 200.00 | 200.00 | 200.00 | 200.00 |
| | | | | 7 | | 225.00 | 225.00 | 225.00 | 225.00 | 225.00 |
| | | | | 8 | | 255.00 | 255.00 | 255.00 | 255.00 | 255.00 |
| | | | | 9 | | 295.00 | 295.00 | 295.00 | 295.00 | 295.00 |
| | | | | 10 | | 345.00 | 345.00 | 345.00 | 345.00 | 345.00 |
| | | | | 11 | | 380.00 | 380.00 | 380.00 | 380.00 | 380.00 |
| | | | | 12 | | 410.00 | 410.00 | 410.00 | 410.00 | 410.00 |
| | | | | 13 | | 445.00 | 445.00 | 445.00 | 445.00 | 445.00 |
| | | | | 14 | | 470.00 | 470.00 | 470.00 | 470.00 | 470.00 |
| | | | | 15 | | 500.00 | 500.00 | 500.00 | 500.00 | 500.00 |
| | | | | 16 | | 500.00 | 500.00 | 500.00 | 500.00 | 500.00 |
| | | | | 17 | | 500.00 | 500.00 | 500.00 | 500.00 | 500.00 |
| | | | | 18 | | 500.00 | 500.00 | 500.00 | 500.00 | 500.00 |
| | | | | 19 | | 500.00 | 500.00 | 500.00 | 500.00 | 500.00 |
| | | | | 20+ | | 500.00 | 500.00 | 500.00 | 500.00 | 500.00 |
| | 300 | 599 | | 5 | | 200.00 | 200.00 | 200.00 | 200.00 | 200.00 |
| | | | | 6 | | 335.00 | 335.00 | 335.00 | 335.00 | 335.00 |
| | | | | 7 | | 425.00 | 425.00 | 425.00 | 425.00 | 425.00 |
| | | | | 8 | | 485.00 | 485.00 | 485.00 | 485.00 | 485.00 |
| | | | | 9 | | 520.00 | 520.00 | 520.00 | 520.00 | 520.00 |
| | | | | 10 | | 535.00 | 535.00 | 535.00 | 535.00 | 535.00 |
| | | | | 11 | | 555.00 | 555.00 | 555.00 | 555.00 | 555.00 |
| | | | | 12 | | 575.00 | 575.00 | 575.00 | 575.00 | 575.00 |
| | | | | 13 | | 600.00 | 600.00 | 600.00 | 600.00 | 600.00 |
| | | | | 14 | | 600.00 | 600.00 | 600.00 | 600.00 | 600.00 |
| | | | | 15 | | 600.00 | 600.00 | 600.00 | 600.00 | 600.00 |

## A. Apple Examples (Continued)

**Example 1** The insured certified production reports for 5 years for blocks 001 - 007. Since the insured did not elect YA,YE or YC, the approved APH yield is a simple 5-year average of actual yields certified for each crop year. If the insured needs a T-Yield, such as YA or to complete 4 years in the APH base period, a Weighted Average Age/Density Worksheet must be prepared to determine the weighted average age and density, since the blocks are different ages and densities. See Example 2.

<table>
<tr><td>CROP<br>APPLES<br>(054)</td><td colspan="2">SECTION 31</td><td>CROP<br>YEAR</td><td>TOTAL<br>PROD.</td><td>AC.</td><td>YIELD</td></tr>
<tr><td>PRACTICE<br>IRR. (002)</td><td colspan="2">TWNSHP 10N</td><td></td><td></td><td></td><td></td></tr>
<tr><td>TYPE<br>111</td><td colspan="2">RANGE 50W</td><td></td><td></td><td></td><td></td></tr>
<tr><td>UNIT NO.<br>0001-0001</td><td colspan="2">LAND OTHER COUNTY<br>YES NO</td><td></td><td></td><td></td><td></td></tr>
<tr><td colspan="2" rowspan="2">OTHER ENTITY (IES)<br><br>NONE</td><td rowspan="2">FSA FARM<br><br>NO. 8912</td><td></td><td></td><td></td><td></td></tr>
<tr><td></td><td></td><td></td><td></td></tr>
<tr><td colspan="2" rowspan="6">RECORD<br>TYPE:<br>CROP<br>YEAR:<br>2011<br><br>PRODUCTION SOLD/COMMERCIAL STORAGE<br>ON FARM STORAGE, RECORDED BIN MEASUREMENT<br>LIVESTOCK FEEDING RECORDED APPRAISAL<br>FSA LOAN RECORD OTHER<br><br>NUMBER OF TREES OR VINES 4,488</td><td rowspan="2">CROPLAND</td><td>2006</td><td>8,346</td><td>18.3</td><td>A456</td></tr>
<tr><td>2007</td><td>9,050</td><td>18.3</td><td>A495</td></tr>
<tr><td rowspan="4">TMA<br><br>T-YIELD</td><td>2008</td><td>4,075</td><td>18.3</td><td>A223</td></tr>
<tr><td>2009</td><td>8,750</td><td>18.3</td><td>A478</td></tr>
<tr><td>2010</td><td>10,550</td><td>18.3</td><td>A577</td></tr>
<tr><td></td><td></td><td></td><td>TOTAL<br><br>2,229</td></tr>
<tr><td colspan="2">PROCESSOR<br>NUMBER/NAME<br><br>Any Processor</td><td>OTHER (AVERAGE)<br><br>446</td><td colspan="2">PRELIMINARY YIELD<br><br>446<br><br>PRIOR YIELD</td><td colspan="2">APPROVED<br>APH YIELD<br><br>446 bu./Acre for 18.3 Acres<br>(For Verifier use only)</td></tr>
</table>

## A. Apple Examples (Continued)

Example 2: Since the blocks are different ages and densities, a Weighted Average Age/Density Worksheet is prepared to determine the applicable YA value for each crop year in the APH database.

**WEIGHTED AVERAGE AGE/DENSITY WORKSHEET**

| NAME: | | | | POLICY NUMBER: | UNIT NUMBER: |
|---|---|---|---|---|---|
| I. M. INSURED | | | | XXXX | 0001-0001 |
| CROP: | PRACTICE | TYPE | VARIETY/OTHER | STATE: | LEGAL DESCRIPTION: |
| APPLES | 002 | 111 | N/A | CO | Sec. 31 T10S R50W |
| CROP YEAR: | | COUNTY: | | | FSA FN/TRACT/FIELD: |
| 2011 | | MONTROSE | | | 8912 |

| BLOCK | MONTH/YEAR | SET OUT YEAR | ACRES | SET OUT YEAR EXTENSIONS | DENSITY | ACRES | DENSITY EXTENSIONS |
|---|---|---|---|---|---|---|---|
| 001 | 04/1992 | 1992 | 2.2 | 4,382.4 | 218 | 2.2 | 479.6 |
| 002 | 04/1992 | 1992 | 3.2 | 6,371.4 | 218 | 3.2 | 697.6 |
| 003 | 03/1999 | 1999 | 1.7 | 3,398.3 | 218 | 1.7 | 370.6 |
| 004 | 03/1999 | 1999 | 0.7 | 1,399.3 | 218 | 0.7 | 152.6 |
| 005 | 05/2000 | 2000 | 1.4 | 2,800.0 | 218 | 1.4 | 305.2 |
| 006 | 05/2000 | 2000 | 3.8 | 7,600.0 | 182 | 3.8 | 691.6 |
| 007 | 04/2006 | 2006 | 5.3 | 10,631.8 | 340 | 5.3 | 1,802.0 |
| | | | | | | | |
| | | | | | | | |
| | | | | | | | |
| | | | | | | | |
| | | | | | | | |
| | | | | | | | |
| | | | | | | | |
| | | | | | | | |
| | | | | | | | |
| | | | | | | | |
| | | TOTALS: | 18.3 | 36,583.2 | TOTALS: | 18.3 | 4,499.2 |

| WEIGHTED AVERAGE SET OUT YEAR | 1999 W | WEIGHTED AVERAGE DENSITY | 246 |
|---|---|---|---|

TRANSITIONAL YIELD: Calculation - (2011 – 1999 W +1) = 13th leaf year from the actuarial document 246 trees/acre at 13th leaf year = T-Yield of 445 for 2011

## A. Apple PAW Examples (Continued)

**Example 2 (continued)**:

A Weighted Average Age/Density Worksheet is used to determine the weighted average set out year and density. The worksheet may be used to determine the applicable YA when elected by the insured.

The T-Yield Calculation for the current crop year is 2011 – 1999 "W" weighted average year + 1 = 16$^{th}$ leaf then from the actuarial documents 246 trees/acre at 16th leaf year = T-Yield of 500;

For each preceding year in the APH database, for YA only, the leaf year must be reduced by one year and the applicable leaf year T-yield is then used for YA purposes:

- 2010 15$^{th}$ leaf T-Yield = 500;
- 2009 14$^{th}$ leaf T-Yield = 470;
- 2008 13$^{th}$ leaf T-Yield = 445;
- 2007 12$^{th}$ leaf T-Yield = 410; and
- 2006 11$^{th}$ leaf T-Yield = 380.

YA is 60% of the applicable leaf year T-Yield.

Since No Yield in the APH Database, contained in Example 1, is less than 60% times the applicable weighted average T-Yield above, YA is not applicable to the APH database.

## A. Apple Examples (Continued)

**Example 3** The insured has certified 3 years of acreage and production for blocks 001 - 007. Standard APH procedures apply and the approved APH yield is based on a simple average consisting of the three actual years (total production divided by total acreage for each year) and one 100% variable T-Yield. As the blocks are of different ages and densities a Weighted Average Age/Density Worksheet is required to determine the applicable T-Yield for mixed age and density.

| | | | | | | |
|---|---|---|---|---|---|---|
| CROP<br>APPLES (054)<br>PRACTICE<br>IRR. (002)<br>TYPE<br>111<br>UNIT NO. 0001-0001 | SECTION 31<br>TWNSHP 10N<br>RANGE 50W<br>LAND OTHER COUNTY YES NO | | CROP YEAR | TOTAL PRODUCTION | ACRES | YIELD |
| | | | | | | |
| | | | | | | |
| | | | | | | |
| OTHER ENTITY (IES)<br>NONE | | FSA FN<br>123 | | | | |
| | | | | | | |
| RECORD TYPE: CROP YEAR: 2011 | | CROPLAND | | | | |
| | | | | | | T445 |
| PRODUCTION SOLD/COMMERCIAL STORAGE<br>ON FARM STORAGE, RECORDED BIN MEASUREMENT<br>LIVESTOCK FEEDING RECORDED APPRAISAL<br>FSA LOAN RECORD OTHER<br>NUMBER OF TREES OR VINES 4,495 | | Area Classification | 2008 | 4,075 | 18.3 | A223 |
| | | | 2009 | 8,750 | 18.3 | A478 |
| | | | 2010 | 10,550 | 18.3 | A577 |
| | | 14 TRANSITIONAL YIELD:<br>445 W | | | | 19 TOTAL<br>1,723 |

| PROCESSOR NUMBER/NAME | OTHER (Average) | (A) PRELIMINARY YIELD | APPROVED APH YIELD |
|---|---|---|---|
| Any Processor | 445 | 431<br>(B) PRIOR YIELD | 431 bu./Acre for 18.3 Acres<br>(For Verifier use only) |

EXAMPLE

## A. Apple Examples (Continued)

For unit 0001-0001 in Example 4, a Weighted Average Age/Density Worksheet is calculated to determine the weighted average set out year and average density for reporting purposes. A Weighted Average Age/Density Worksheet may be prepared if the insured elects YA in order to determine the weighted average age and density, since the blocks are of different ages and densities.

**WEIGHTED AVERAGE AGE/DENSITY WORKSHEET**

| NAME: | | | | POLICY NUMBER: | UNIT NUMBER: |
|---|---|---|---|---|---|
| I. M. INSURED | | | | XXXX | 0001-0001 |
| (a) CROP: | (b) PRACTICE | (c) TYPE | (d) VARIETY/OTHER | STATE: | LEGAL DESCRIPTION: |
| APPLES | 002 | 111 | N/A | CO | Sec. 31 T10S R50W |
| CROP YEAR: | | COUNTY: | | | FSA FN: |
| 2011 | | MONTROSE | | | 8912 |

| BLOCK | MONTH/YEAR | SET OUT YEAR | ACRES | SET OUT YEAR EXTENSIONS | DENSITY | ACRES | DENSITY EXTENSIONS |
|---|---|---|---|---|---|---|---|
| 001 | 04/1992 | 1992 | 2.2 | 4,382.4 | 218 | 2.2 | 479.6 |
| 002 | 04/1992 | 1992 | 3.2 | 6,374.4 | 218 | 3.2 | 697.6 |
| 003 | 03/1999 | 1999 | 1.7 | 3,398.3 | 218 | 1.7 | 370.6 |
| 004 | 03/1999 | 1999 | 0.7 | 1,399.3 | 218 | 0.7 | 152.6 |
| 005 | 05/2000 | 2000 | 1.4 | 2,800.0 | 218 | 1.4 | 305.2 |
| 006 | 05/2000 | 2000 | 3.8 | 7,600.0 | 182 | 3.8 | 691.6 |
| 007 | 05/2006 | 2006 | 5.3 | 10,631.8 | 340 | 5.3 | 1,802.0 |
| | | | | | | | |
| | | | | | | | |
| | | | | | | | |
| | | | | | | | |
| | | | | | | | |
| | | | | | | | |
| | | | | | | | |
| | | | | | | | |
| | | | | | | | |
| | | TOTALS: | 18.3 | 36,586.2 | TOTALS: | 18.3 | 4,499.2 |

| WEIGHTED AVERAGE SET OUT YEAR | 1999 W | WEIGHTED AVERAGE DENSITY | 246 |
|---|---|---|---|

TRANSITIONAL YIELD: Calculation - (2011 – 1999 W +1) = 13th leaf year from the actuarial document 246 trees/acre at 13th leaf year = T-Yield of 445 for 2011
T-Yield for 2010 12th leaf =410 / T-Yield for 2009 11th leaf =380 / T-Yield for 2009 10th leaf =345

## B. Peaches PAW Examples

Use the following information from the PAW for Fresh (101) Type Peach examples.

| **PAW (Perennial Crops)**<br><br>**PRODUCER'S PRE-ACCEPTANCE WORKSHEET** | | | | Applicant's Name:<br>I. M. INSURED | | Policy No.:<br>XXXX | | Unit No.:<br>0001-0001 | Crop:<br>PEACHES | State:<br>AL |
|---|---|---|---|---|---|---|---|---|---|---|
| | | | | Legal Description:<br>XXXXXXXX | | Crop Year:<br>2012 | | County:<br>AUTAUGA | | FSA FN/TRACT/FIELD:<br>8912 |
| Block No. | Mo/Yr Set Out/Grafted | Acres | Variety | Type | Number of Plants | Plant Spacing | Percent Stand | Density | Practice IRR/NI | Insurable or Uninsurable |
| 001 | 04/2007 | 10.0 | RED GLOBE | L (Late) | 1090 | 20X20 | 100% | 109 | IRR | INS |
| 002 | 05/2003 | 20.0 | HARVESTER | M (Mid) | 2299 | 18X20 | 95% | 121 | NI | INS |
| 003 | 04/2004 | 15.0 | EMPRESS | E (Early) | 1422 | 20X20 | 87% | 109 | NI | INS |
| | | | | | | | | | | |
| | | | | | | | | | | |
| | | | | | | | | | | |
| | | | | | | | | | | |
| TOTALS: | | 45.0 | | | 4,811 | | | | | |

EXAMPLE

## B. Peaches PAW Examples (Continued)

**Transitional Yield And YA Substitution Table (BU)**

| T/P # | Density | | Characteristic | Leaf | Sub | 2012 | 2011 | 2010 | 2009 | 2008 |
|---|---|---|---|---|---|---|---|---|---|---|
| | Low | High | Name | Year | County | | | | | |
| **T/P 1** | 76 | 150 | Early | 4 | | 55.00 | 55.00 | 55.00 | 55.00 | 55.00 |
| | | | | 5 | | 70.00 | 70.00 | 70.00 | 70.00 | 70.00 |
| | | | | 6 | | 100.00 | 100.00 | 100.00 | 100.00 | 100.00 |
| | | | | 7 | | 105.00 | 105.00 | 105.00 | 105.00 | 105.00 |
| | | | | 8 | | 135.00 | 135.00 | 135.00 | 135.00 | 135.00 |
| | | | | **9** | | **135.00** | **135.00** | **135.00** | **135.00** | **135.00** |
| | | | | 10 | | 125.00 | 125.00 | 125.00 | 125.00 | 125.00 |
| | | | | 11 | | 115.00 | 115.00 | 115.00 | 115.00 | 115.00 |
| | | | | 12 | | 105.00 | 105.00 | 105.00 | 105.00 | 105.00 |
| | | | | 13 | | 85.00 | 85.00 | 85.00 | 85.00 | 85.00 |
| | | | | **14+** | | **68.00** | **68.00** | **68.00** | **68.00** | **68.00** |
| | | | Mid | 4 | | 120.00 | 120.00 | 120.00 | 120.00 | 120.00 |
| | | | | 5 | | 135.00 | 135.00 | 135.00 | 135.00 | 135.00 |
| | | | | 6 | | 165.00 | 165.00 | 165.00 | 165.00 | 165.00 |
| | | | | 7 | | 170.00 | 170.00 | 170.00 | 170.00 | 170.00 |
| | | | | 8 | | 190.00 | 190.00 | 190.00 | 190.00 | 190.00 |
| | | | | 9 | | 190.00 | 190.00 | 190.00 | 190.00 | 190.00 |
| | | | | **10** | | **180.00** | **180.00** | **180.00** | **180.00** | **180.00** |
| | | | | 11 | | 170.00 | 170.00 | 170.00 | 170.00 | 170.00 |
| | | | | 12 | | 155.00 | 155.00 | 155.00 | 155.00 | 155.00 |
| | | | | 13 | | 140.00 | 140.00 | 140.00 | 140.00 | 140.00 |
| | | | | 14+ | | 112.00 | 112.00 | 112.00 | 112.00 | 112.00 |
| | | | Late | 4 | | 130.00 | 130.00 | 130.00 | 130.00 | 130.00 |
| | | | | 5 | | 155.00 | 155.00 | 155.00 | 155.00 | 155.00 |
| | | | | **6** | | **185.00** | **185.00** | **185.00** | **185.00** | **185.00** |

## B. Peaches PAW Examples (Continued)

**Example 1:** This example demonstrates peaches reporting less than the required five years base period and added land with less than four years of the prior producer's hard copy records of production and acreage available.

A Peach insured has certified peach production and acreage **(insurable and uninsurable acreage separately)** by block on three blocks. Block number 001 has met policy minimums for two years with four years certified, block number 002 has four years of data certified, block number 003 was recently acquired and only two years of data are available.

The APH approved yield is based on individual blocks. The yields reported by block do not qualify for YA (i.e., block 001 2012-2007 = 5 + 1 = 6 age for 2012 T-Yield 185 X .60) = 111 substitute yield; for 2011 6 – 1 = 5, T-Yield 155 X .60 = 93 substitute yield; in 2010 6 -2 = 4, T-Yield 130 X .60 = 78 substitute yield; etc.) (T-Yield for block number 003 added land yield descriptor "NX" is applicable).

Actuarial documents do not show T-Yield adjustments for percent stand on peaches in Alabama; however, acreage reduction for percent of stand does apply. The reported 87% stand on block 003 contains no adjustment in acreage based upon age and condition of orchard.

The insurable acreage in 2012 for block 003 is 13.1 acres (15.0 X 0.87 = 13.1) which is reflected in subsequent years APH database(s) and production reports.

## B. Peaches PAW Examples (Continued)

| PRODUCTION REPORT | | | | | | | | | | | | | | | |
|---|---|---|---|---|---|---|---|---|---|---|---|---|---|---|---|
| NAME: I. M. INSURED | | | | | POLICY NUMBER XXXX | | | | | UNIT NUMBER: 0001-0001 | | | | | |
| (a) CROP | | | | | STATE | | | | | LEGAL DESCRIPTION | | | | | |
| PEACHES | | | | | AL | | | | | XXXXXXXX | | | | | |
| CROP YEAR | | | | | COUNTY | | | | | FSA FN/TRACT/FIELD | | | | | |
| 2012 | | | | | AUTAUGA | | | | | 8912 | | | | | |
| | (b) PRACTICE 997 | | c) TYPE 101 L | | (b) PRACTICE 997 | | c) TYPE 101 M | | | (b) PRACTICE 997 | | (c) TYPE 101 E | | | |
| | (d) VARIETY/OTHER LATE | | | | (d) VARIETY/OTHER MID | | | | | (d) VARIETY/OTHER EARLY | | | | | |
| | BLOCK NO.: | | 001 | Mo/Yr 04/ 2007 | BLOCK NO.: | | 002 | Mo/Yr 05/ 2003 | | BLOCK NO.: | | 003 | Mo/Yr 04/ 2004 | | |
| | SET OUT YEAR: | 2007 | DENSITY: | 109 | SET OUT YEAR: | 2003 | DENSITY: | 121 | | SET OUT YEAR: | 2004 | DENSITY: | 109 | | |
| YEAR | PRODUCTION | | ACRES | YIELD | PRODUCTION | | ACRES | YIELD | | PRODUCTION | | ACRES | YIELD | | |
| 2007 | | | | | | | | | | | | | | | |
| 2008 | 0 | | 10.0 | T185 | 3,380 | | 20.0 | A169 | | | | | NX122 | | |
| 2009 | 1000 | | 10.0 | T185 | 3,560 | | 20.0 | A178 | | | | | NX122 | | |
| 2010 | 1,600 | | 10.0 | A160 | 3,600 | | 20.0 | A180 | | 1,530 | | 15.0 | A102 | | |
| 2011 | 2,000 | | 10.0 | A200 | 3,700 | | 20.0 | A185 | | 1,635 | | 15.0 | A109 | | |
| | | | TOTAL | 730 | TOTAL | | | 712 | | TOTAL | | | 455 | | |
| | | | T-YIELD ADJ. | 185 | | | T-YIELD ADJ. | 180 | | | | T-YIELD ADJ. | 135 | | |
| | | | APPROVED YIELD | 183 | | | APPROVED YIELD | 178 | | | | APPROVED YIELD | 114 | | |

EXAMPLE

## B. Peaches PAW Examples (Continued)

**Example 2:** This example is similar to example 1, except: only two years were reported; no added land; Block 003 was planted in April 2000; and the number of trees reported is 1308, making the percent stand 80%.

Production is commingled for other characteristics on the actuarial documents; however, separate acreage information is available. This example demonstrates separation and reporting of commingled production and yield descriptors following procedure in Para. 1088 B.

A peach insured has certified total production and acreage for two years. Variable T-Yields (90 percent because the insured provided two years of records) determined on other characteristics age, density, percent stand for each block of acreage certified on the PAW (block 003 was adjusted for 80 percent stand see Para. 1803).

The APH database is based on individual blocks required for other characteristics (Early, Mid, and Late) using Para. 1088 B for commingled production. Using the current T-Yields and adjusting by year, using the commingled worksheet, the 2011 and 2010 production was separated. The applicable acreage certified by block is shown, yields reported do not qualify for YA, and two 90% T-yields “N”.

## B. Peaches PAW Examples (Continued)

**PRODUCTION WORKSHEET**

| NAME | POLICY NUMBER | UNIT NUMBER |
|---|---|---|
| I. M. INSURED | XXXX | 0001-0001 |
| (a) CROP: PEACHES | STATE: AL | LEGAL DESCRIPTION: XXXXXXXX |
| CROP YEAR: 2012 | COUNTY: AUTAUGA | FSA FN/TRACT/FIELD: 8912 |

| | (b) PRACTICE 997 / (c) TYPE 101 L | (b) PRACTICE 997 / (c) TYPE 101 M | (b) PRACTICE 997 / (c) TYPE 101 E |
|---|---|---|---|
| | (d) VARIETY/OTHER LATE | (d) VARIETY/OTHER MID | (d) VARIETY/OTHER EARLY |
| | BLOCK NO.: 001 Mo/Yr 04/2007 | BLOCK NO.: 002 Mo/Yr 05/2003 | BLOCK NO.: 003 Mo/Yr 04/2000 |
| | SET OUT YEAR: 2007 DENSITY: 109 | SET OUT YEAR: 2003 DENSITY: 121 | SET OUT YEAR: 2000 DENSITY: 109 |

| YEAR | PRODUCTION | ACRES | YIELD | PRODUCTION | ACRES | YIELD | PRODUCTION | ACRES | YIELD |
|---|---|---|---|---|---|---|---|---|---|
| | | | | | | | | | |
| 2008 | | | N167 | | | N162 | | | N61 |
| 2009 | | | N167 | | | N162 | | | N61 |
| 2010 | | 10.0 | AC158 | | 20.0 | AC194 | | 15.0 | AC87 |
| 2011 | | 10.0 | AC209 | | 20.0 | AC203 | | 15.0 | AC77 |
| | | TOTAL | 701 | | TOTAL | 721 | | TOTAL | 286 |
| | | T-YIELD ADJ. | 185 | | T-YIELD ADJ. | 180 | | T-YIELD ADJ. | 68 |
| | | APPROVED YIELD | 175 | | APPROVED YIELD | 180 | | APPROVED YIELD | 72 |

EXAMPLE

## B. Peaches PAW Examples (Continued)

Due to the percent stand being determined for the current crop year and the age of this block, an acreage adjustment will be applicable for the following crop year for the APH database and on the current acreage report. When reporting acreage the following year the prior year reported acreage (adjusted based upon stand) is reported and any additional adjustment in acreage for the current year is reported on the acreage report.

| MULTI-PURPOSE PRODUCTION AND YIELD WORKSHEET | | | | | | |
|---|---|---|---|---|---|---|
| **CROP YEAR** | **COL. 1** | **COL. 2** | **COL.3** | **COL. 4** | **COL. 5** | **COL. 6** |
| 2011 | LATE | 10.0 | 185 | 1,850 | 1.13 | 209 |
| 2011 | MID | 20.0 | 180 | 3,600 | 1.13 | 203 |
| 2011 | EARLY | 15.0 | 68 | 1,020 | 1.13 | 77 |
| | | | | 7,330÷6,470 | 1.13 | |
| | | | | | | |
| 2010 | LATE | 10.0 | 155 | 1,550 | 1.02 | 158 |
| 2010 | MID | 20.0 | 190 | 3,800 | 1.02 | 194 |
| 2010 | EARLY | 15.0 | 85 | 1,275 | 1.02 | 87 |
| | | | | 6,750÷6,625 | 1.02 | |

## B. Peaches PAW Examples (Continued)

**Example 3:** Similar to information contained in prior examples, except: all years were certified by the insured; block 003 meets criteria for downtrending Para. 1861 and has acreage changes; an adjustment in the acres is no longer applicable.

Block 003 was planted in April of 2000 and this block meets the selection criteria for high variability of actual yields. The PAW shows changes in acreage and tree counts by year for block 003. AIP did a PAIR and determined the present measured acres of 12.9 on block 003.

This is also shown on PAW. Units or blocks were reviewed and determinations made for meeting the selection criteria shown in Para. 1561.

After completing reviews, block 003 continues to show that the most recent three-year average (123+102+66=291/3=97) is less than 75% of the APH average yield (97 / 133 = 0.73).

The adjusted yield is calculated using the applicable adjustment, 80% of the average yield (133 X .80 = DF 106). It is coded with yield indicator "DF" to show adjustment made according to formula.

## B. Peaches PAW Examples (Continued)

**PRODUCTION REPORT**

| NAME | POLICY NUMBER | UNIT NUMBER |
|---|---|---|
| I. M. INSURED | XXX | 0001-0001 |
| (a) CROP: PEACHES | STATE: AL | LEGAL DESCRIPTION: XXXXXXXX |
| CROP YEAR: 2009 | COUNTY: AUTAUGA | FSA FN/TRACT/FIELD: 8912 |

| YEAR | (b) PRACTICE 997 / (d) TYPE 101 / (d) VARIETY/OTHER LATE / BLOCK NO.: 001 / Mo/Yr 04/2007 / SET OUT YEAR: 2007 / DENSITY: 109 | | | (b) PRACTICE 997 / (c) TYPE 101 / (d) VARIETY/OTHER MID / BLOCK NO.: 002 / Mo/Yr 05/2003 / SET OUT YEAR: 2002 / DENSITY: 121 | | | (b) PRACTICE 997 / (c) TYPE 101 / (d) VARIETY/OTHER EARLY / BLOCK NO.: 003 / Mo/Yr 04/2000 / SET OUT YEAR: 2000 / DENSITY: 109 | | |
|---|---|---|---|---|---|---|---|---|---|
| | PRODUCTION | ACRES | YIELD | PRODUCTION | ACRES | YIELD | PRODUCTION | ACRES | YIELD |
| 2007 | 0 | 10.0 | | 2,880 | 20.0 | A144 | 3,100 | 15.0 | A207 |
| 2008 | 0 | 10.0 | T185 | 3,380 | 20.0 | A169 | 2,500 | 15.0 | A167 |
| 2009 | 1,000 | 10.0 | T185 | 3,560 | 20.0 | A178 | 1,850 | 15.0 | A123 |
| 2010 | 1,600 | 10.0 | A160 | 3,600 | 20.0 | A180 | 1,470 | 14.4 | A102 |
| 2011 | 2,000 | 10.0 | A200 | 3,700 | 20.0 | A185 | 900 | 13.6 | A66 |
| | | TOTAL | 730 | | TOTAL | 856 | | TOTAL | 665 |
| | | T-YIELD ADJ. | 185 | | T-YIELD ADJ. | 180 | | T-YIELD ADJ. | 68 |
| | | APPROVED YIELD | 183 | | APPROVED YIELD | 171 | | APPROVED YIELD | DF 106 |

EXAMPLE

## C. Shelling Percentage Chart for Clean Unshelled Almonds

The varietal shelling percentages applicable to unshelled almonds for APH purposes are as follows:

| VARIETY | AVERAGE SHELLING PERCENT |
|---|---|
| Aldrich | 60 |
| Avalon | 64 |
| Ballico | 55 |
| Butte | 60 |
| Carmel | 65 |
| Carrion | 60 |
| Davey | 55 |
| Dottie Won | 50 |
| Drake | 40 |
| Durango | 59 |
| Fritz | 55 |
| Harvey | 65 |
| IXL | 50 |
| Jeffries | 70 |
| Jordanolo | 65 |
| Kapareil | 68 |
| Le Grand | 60 |
| Livingston | 65 |
| Merced | 70 |
| Milow | 65 |
| Mission | 50 |
| Monarch | 48 |
| Mono | 50 |
| Monterey | 55 |
| Morley | 50 |
| Ne Plus Ultra | 65 |
| Non Pariel | 70 |
| Norman | 60 |
| Padre | 55 |
| Pearle | 55 |
| Peerless | 45 |
| Planada | 58 |
| Plateau | 50 |
| Price | 65 |
| Ripon | 45 |
| Rosetta | 50 |
| Ruby | 55 |
| Sauret I | 65 |
| Sauret II | 65 |
| Savana | 65 |
| Solano | 65 |
| Sonora | 70 |
| Thompson | 70 |
| Tokyo | 55 |
| Valenta | 55 |
| Vesta | 51 |
| Winters | 55 |
| Woods Colony | 65 |
| Yosemite | 47 |

**Example:** 54,688 pounds of unshelled Norman almonds, which have a conversion factor of 60 percent. 54,688 x .60 = 32,813 pounds of shelled Norman almonds.

## D. Weighted Average Age/Density Worksheet

| ELEMENT | INFORMATION REQUIRED |
|---|---|
| **BLOCK NUMBER** | Appropriate block number from the PAW, shown to three places (e.g., 001). |
| **MONTH YEAR** | Month and year planted; if mixed enter "00" for the month when yield indicator "W" or yield indicator "F" is utilized. |
| **SET OUT YEAR** | Set Out Year for the block is calculated as follows:<br><br>(a) Prior to July 1 (May 1 for Florida Citrus) of the coming leaf year<br>- 1st full leaf year following setting.<br><br>For example, for trees set out in February of 2010 (2/10), the correct set out year is 2010.<br><br>(b) On or after July 1 (May 1 for Florida Citrus) of the coming leaf year<br>- 1st full year following setting.<br><br>For example, for trees set out in November of 2010 (11/10), the correct set out year is 2011. |
| **ACRES** | Acres for the block. |
| **SET OUT YEAR EXTENSIONS** | Multiply the set out year by the acres and enter the total. |
| **DENSITY** | Density for the block. |
| **ACRES** | Acres for the block. |
| **DENSITY EXTENSIONS** | Multiply the density by the acres and enter the total. |
| **TOTALS** | Totals for columns of Acres and Set Out Year Extensions. |
| **TOTALS** | Totals for columns of Density and Density Extensions. |
| **WEIGHTED AVERAGE SET OUT YEAR** | Calculate the weighted average set out year by dividing Total Set Out Year Extension by Total Acres. |
| **WEIGHTED AVERAGE DENSITY** | Calculate the weighted average set out year by dividing Total Density Extensions by Total Acres. |
| **TRANSITIONAL YIELD** | Transitional yield (T-Yield) for the block or unit, using the weighted average set out year and weighted average density to obtain the T-Yield from the appropriate actuarial document. The T-Yield is then transferred to the appropriate block of the APH database for the unit or worksheet for the block. When grafting (or dehorning) is applicable the month and year completed must be used to determine the leaf-year (age) and substituted to determine the weighted average age and T-Yield (unless an alternative adjusted T-Yield and procedures for approving a RO Determined Yield is provided, shown on the actuarial documents or RO Underwriting Guidelines). |

## D. Weighted Average Density Worksheet (Continued)

### WEIGHTED AGE/DENSITY/WORKSHEET
**(For illustration purposes ONLY)**

| NAME: | | | | POLICY NUMBER: | UNIT NUMBER: |
|---|---|---|---|---|---|
| I. M. INSURED | | | | XXXX | 0001-0001 |
| (a) CROP: | (b) PRACTICE | (c) TYPE | (d) VARIETY/OTHER | STATE: | LEGAL DESCRIPTION: |
| | | | | | |

| CROP YEAR: | COUNTY: | FSA FN: |
|---|---|---|
| | | |

| BLOCK | MONTH/YEAR | SET OUT YEAR | ACRES | SET OUT YEAR EXTENSIONS | DENSITY | ACRES | DENSITY EXTENSIONS |
|---|---|---|---|---|---|---|---|
| | | | | | | | |
| | | | | | | | |
| | | | | | | | |
| | | | | | | | |
| | | | | | | | |
| | | | | | | | |
| | | | | | | | |
| | | | | | | | |
| | | | | | | | |
| | | | | | | | |
| | | | | | | | |
| | | | | | | | |
| | | | | | | | |
| | | | | | | | |
| | | | | | | | |
| | | | | | | | |
| | | TOTALS: | | | TOTALS: | | |

| WEIGHTED AVERAGE SET OUT YEAR | WEIGHTED AVERAGE DENSITY |
|---|---|
| | |

TRANSITIONAL YIELD Crop Year – Weighted Average set out year + 1

Example

## E. Tree/Vine/Bush Measurement

Perennial crop acres are based on land acres and/or tree/vine/bush acres see Part 18 Section 2. Acreage for Perennial crops must be measured using one of the items listed in Para. 1808. However, in order to determine tree/vine/bush acres, measurements in this section must be used in conjunction with, see Para. 1808(6).

**Note:** The symbols (☼, x,✱) in the planting pattern diagrams herein, represent a single tree/vine/bush, unless otherwise stated. Planting pattern diagrams and number of trees/vines/bushes contained herein are for illustration purposes only and are not to scale.

## F. Planting Patterns

Planting crops in patterns such as single rows, squares, rectangles, orchards, hedgerow, border, hexagonal, quincunx, double row, and interplanted are traditional planting styles for most crops.

**Note:** For the planting patterns mentioned above, the references below to 43,560 are the number of square feet per acre.

(1) Square/ Rectangle Planting Pattern

(a) Number of Trees per Acre Formula:

To calculate the numbers of trees/vines/bushes per acre use the formula below:

T= Trees/Vines/Bushes per acre
L= Average distance between trees/vines/bushes
W= Average distance between tree/vine/bush rows

**Formula:** 43,560 sq. ft. /acre ÷ (L x W) = **T**

**Example:** 43,560 sq. ft. /acre ÷ (20.0 ft. x 20.0 ft.) = **108.9 rounded to 109 trees/acre**

## F. Planting Patterns (Continued)

(2) Planting Diagram

**Square Planting Pattern**

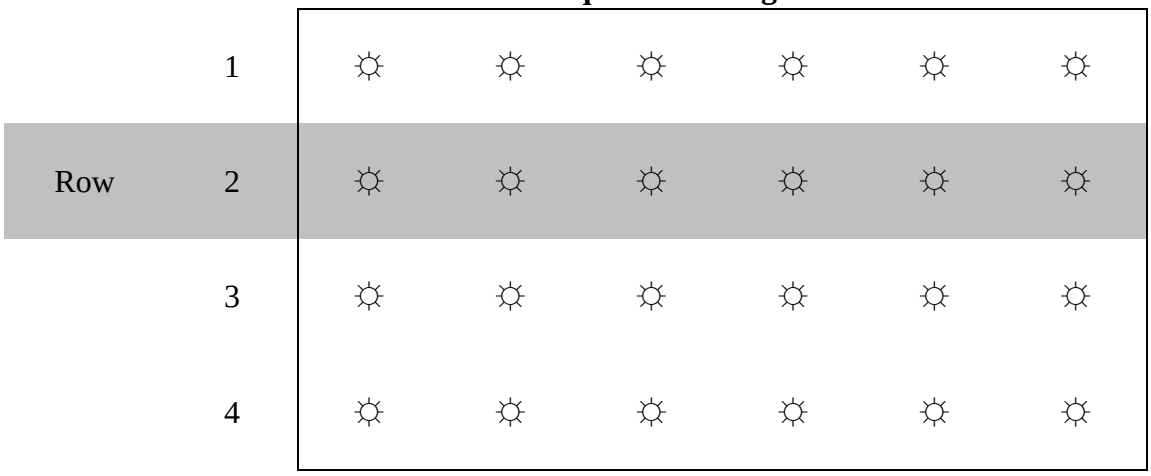


(3) Orchard Acreage Formula

To calculate the acreage for an orchard that is classified as a square/rectangle planting pattern use the formula below:

A= Acres
N= Number of trees in the orchard
T= Number of trees per acre

**Formula:** N ÷ T = **A**

**Example:** 42 ÷ 109 = **0.385 rounded to 0.4 acres**

## G. Hedgerow/Border Planting Pattern

(1) Trees per Acre Formula

To calculate the acreage for trees/vines/bushes per acre planted in a hedgerow/border pattern use the formula below:

W= Average row width (Average width of the distance between trees in the row not to exceed the distance from the center of the tree to the middle of the road, boundary, or ditch).

L= Length between trees in a row (L is only used when the trees/vines/bushes are planted along a road, boundary or ditch row to designate the length of the row of trees).

A= Trees/vines/bushes per acre.

## G. Hedgerow/Border Planting Pattern (Continued)

**Formula:** 43,560 ÷ (L x W) = trees/vines/bushes per acre (T).

**Example:** 43,560 ÷ (20.0 ft. x 20.0 ft.) = 108.9 rounded to 109 trees per acre.

Divide the total number of trees counted in a single row (R) by the trees per acre (T).

Calculate acreage occupied by this row of trees using the formula below.

(2) Acreage Occupied by a Row of Trees/Vines/Bushes Formula:

R ÷ T = acres

**Example:** 20 ÷ 109 = 0.18 rounded to 0.2 acres.

If two or more rows, multiply result by the number of rows.

(3) Planting Diagram

Trees/vines/bushes planted in a hedgerow/border planting pattern in the diagram below.

**Hedgerow or Border Planting Pattern**

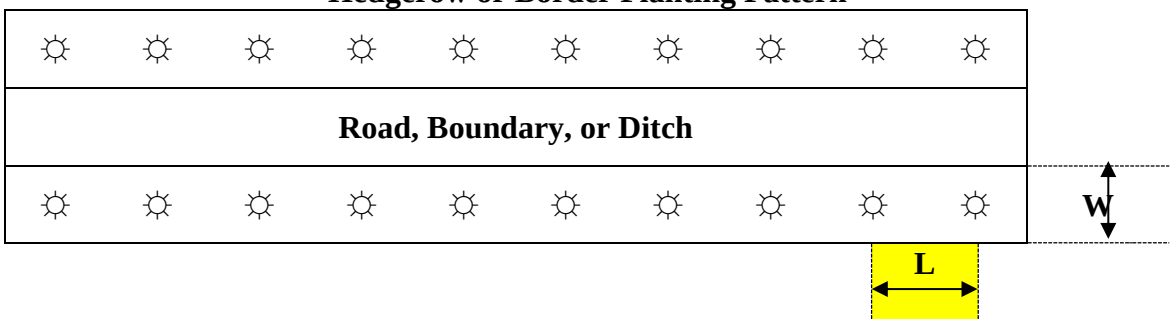


## H. Hexagonal/Quincunx Planting Pattern

(1) Hexagonal/Quincunx Planting Formula

To calculate the trees per acre for Hexagonal/Quincunx use the formula below:

T= Trees/Vines/Bushes per acre
L= Distance between trees
W= Distance between rows

**Formula:** 87,120 ÷ (L x W) = **T**

**Example:** 87,120 ÷ (20.0 ft. x 20.0 ft.) = **217.8 rounded to 218 trees/acre**

## H. Hexagonal/Quincunx Planting Pattern (Continued)

**Note:** For hexagonal/quincunx planting patterns, double the number of trees per acre for a square pattern from the trees per acre chart. For example, for a 20.0 ft. x 20.0 ft planting pattern from the chart, doubled is 218 trees per acre. Additionally, 87,120 represents the number of square feet per acre (43,560) doubled.

(2) Planting Diagram

To identify a quincunx/hexagonal planting pattern see the descriptions and diagram below.

(a) A quincunx planting pattern is defined as trees/vines/bushes planted in corners of a rectangle with one tree in the middle of the rectangle (illustrated on the left in the diagram below).

(b) A hexagonal planting pattern is defined as six adjoining trees/vines/bushes planted equidistant from any one plant in the orchard (illustrated on the right in the diagram below).

**Quincunx/Hexagonal Planting Patterns**

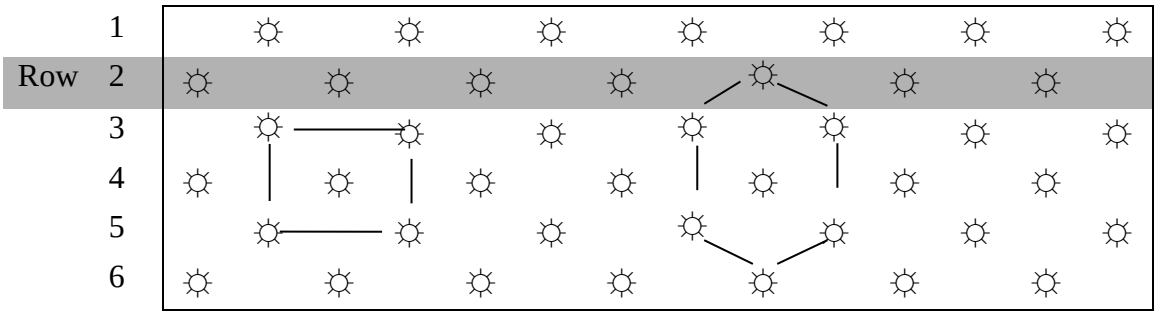


(3) Orchard Acreage Calculation

To calculate acreage for an orchard that is classified as a Hexagonal/Quincunx planting pattern use the formula below:

A= Acres
N= Number of trees in the orchard
T= Number of trees per acre

**Formula**: N ÷ T = **A**

**Example:** 435 ÷ 218 = **1.995 rounded to 2.0 acres**

## I. Double Row Planting Pattern

(1) Double Row Plating Pattern

To calculate the number of trees in the orchard for double planting patterns use the following formula below:

T= Actual number of trees in each row
R= Number of rows
N= Number of trees in the orchard

Formula: T x R = **N**

Example: 22 x 14 = **308**

(2) Planting Diagram

Tree/vines/bushes planted in a double row pattern in diagram below.

**Double Row Planting Pattern**

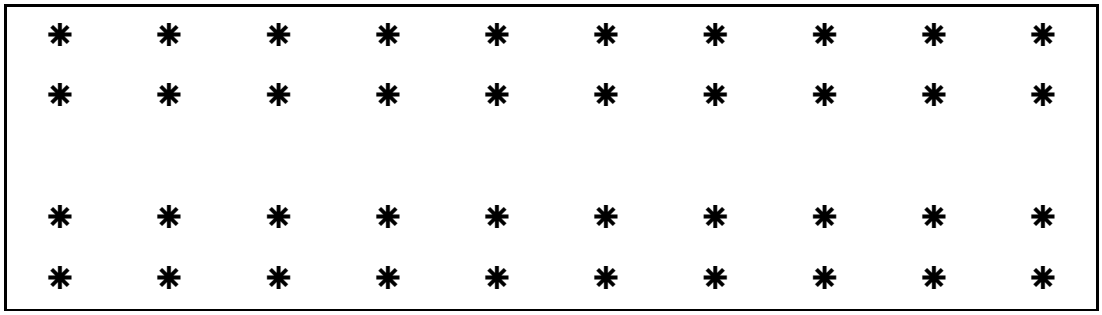

(3) Square Feet per Orchard

To calculate the numbers of square feet in an orchard for the double row planting pattern use the formula below.

L= Length of the orchard boundary
W= Width of the orchard boundary
S= Square feet/orchard

**Formula:** L x W = **S**

**Example:** 240.0 ft. x 200.0 ft. = **48,000 sq. ft**.

**Note:** Measure the length (L) and width (W) of the orchard boundary in accordance with [see LAM PAR 80 G].

## I. Double Row Planting Pattern (Continued)

(4) Orchard Acreage

To calculate the total acreage in the orchard, use the following formula:

L= Length of the orchard boundary
W= Width of the orchard boundary
S= Square feet/orchard
A= Acres in the orchard

**Formula**: S* ÷ 43,560= A

**Example:** 48,000 sq. ft. ÷ 43,560 sq. ft. = 1.102 rounded to 1.1 acres

**Note:** Use the formula in (c) above to determine the square feet/orchard or (S) in the equation. Additionally, Orchard dimensions are 320.0 ft. by 80.0 ft., which includes the boundary that extends 10.0 ft. beyond the outside rows and 10.0 ft. beyond the ends.

(5) Trees per Acre

To calculate the number of trees per acres, use the following formula:

N= Number of Trees in orchard
A=Acreage
T=Trees/acre

**Formula:** N ÷ A* = T

**Example:** 308 ÷ 1.1 = 280 trees/acre

**Note:** Use the formula in (d) above to determine the acres in the orchard or (a) in the equation.

## J. Interplanted Crop Planting Pattern

(1) Interplanted Crop Planting Pattern

To calculate the acreage for the orchard, use the following formulas:

L= Length of the orchard boundary
W= Width of the orchard boundary
S= Square feet in the orchard
A=Acres in the orchard

## J. Interplanted Crop Planting Pattern (Continued)

**Formula for S**: L x W = S

**Formula for A:** S ÷ 43, 560 Sq. ft. /acre= A

**Example of S**: 320.0 ft. L x 80.0 ft. W = 25,600.0 sq. ft. in the orchard

**Example of A**: 25,600 sq. ft. ÷ 43,560 sq. ft. = 0.588 rounded to 0.6 acres

(2) Planting Diagram

In the diagram below, two separate tree/vine/bush crops are interplanted in the same orchard.

**Orchard Dimensions: 320.0 ft. L x 80.0 ft. W**

| | | | | | | | | | | | | | | |
|---|---|---|---|---|---|---|---|---|---|---|---|---|---|---|
| A | P | A | P | A | P | A | P | A | P | A | P | A | P | A |
| P | A | P | A | P | A | P | A | | A | P | A | P | A | P |
| A | P | A | | A | P | A | P | A | P | A | P | A | P | A |
| P | A | P | A | P | A | | A | P | A | P | A | P | A | P |

Actual tree counts: A = 30 Apple trees, P = 27 Pear trees, 3 missing Pear trees. Original stand was 60 trees.

(3) Orchard Crop Percentage Calculation.

To calculate the percent of each tree crop in the orchard use the formulas below:

D= Actual number of trees from the desired** crop which is to be calculated
B= Total number of orchard trees
X=Original Stand
Y= Missing trees
C= Percent of the desired** crop

**Formula for B:** X – Y = **B**

**Formula for C**: D ÷ B = **C**

**Example of B:** **60** – 3 = **57**

**Example of C:** 30 apple trees ÷ 57 total orchard trees = **0.53 or 53% apple trees**

## J. Interplanted Crop Planting Pattern (Continued)

(a) To calculate the actual acres in the orchard for the desired crop use the formula below:

A= Acres in the orchard
C= Percent of the desired** crop
E= Actual acres in the orchard for the desired** crop

**Formula:** A* X C* = **E**

**Example**: 0.6 acres X 0.53 = **0.3 apple tree acres**

(b) To calculate the total acres of remaining crops use the formula below:

A= Acres in the orchard
E= Actual acres in the orchard for the desired** crop
F= Acres of the remaining crops

**Formula:** A* – E* = **F**

**Example**: 0.6 acres − 0.3 apple acres = **0.3 pear tree acres**

**Note:** The desired crop is designated as the primary crop for which the percentage is to be calculated for. Use the formula in (1), (3) and (a) above to determine the acres in the orchard or (A), the percent of the desired crop or (C) and the actual acres in the orchard for the desired crop or (E) in the equation.

## K. Missing and Partial Tree Formulas

(1) Number of trees per acre

To calculate the number of trees per acre, use the following formula:

L= Average distance between the trees
W= Average distance between the tree rows
T= Trees/acre

**Formula:** 43,560 sp ft/ acre ÷ (L x W) = **T**

**Example:** 43,560 sq. ft/acre ÷ (20.0 ft. x 20.0 ft.) = **108.9 rounded to 109 trees/acre**

## K. Missing and Partial Tree Formulas (Continued)

(2) Diagram for Orchard with Missing and/or Partial Trees

The following diagram illustrates an orchard that contains full trees, trees with two scaffold limbs, trees with one scaffold limb, and skips. The tree spacing in this diagram is 20.0 ft. x 20.0 ft.

**Orchard Dimensions: 320.0 ft. L x 80.0 ft. W**

| | | | | | | | | | | | | | | |
|---|---|---|---|---|---|---|---|---|---|---|---|---|---|---|
| **X** | **X** | | **X** | | | **X** | **X** | | **X** | **X** | | **X** | **V** | **X** |
| **X** | **V** | **X** | | **X** | **X** | **X** | **X** | **X** | **** | **X** | **X** | **X** | **X** | **X** |
| **X** | | **X** | **X** | **X** | **X** | | **/** | **X** | **X** | **X** | **X** | **X** | | **X** |
| **X** | **X** | **X** | | | **X** | **X** | **X** | **X** | **X** | | **X** | **X** | **X** | **V** |

Actual tree counts: X = 43 full trees, V = 3 two-scaffold limb trees, \ or / = 2 one-scaffold trees, 11 skips (dead or missing trees). Original stand was 59 trees.

(3) Orchard Acreage

To calculate acres in the orchard use the following formulas:

L= Length of the orchard boundary
W= Width of the orchard boundary
S= Square feet in the orchard
A=Acres in the orchard

**Formula for S**: L x W = **S**

**Formula for A:** S ÷ 43, 560 Sq. ft. /acre = **A**

**Example of S:** 320.0 ft. L x 80.0 ft. W = **25,600.0 sq. ft. in the orchard**

**Example of A**: 25,600 sq. ft. ÷ 43,560 sq. ft. = **0.588 rounded to 0.6 acres**

## K. Missing and Partial Tree Formulas (Continued)

(4) Insurable acres

To calculate the insurable acres use the following formulas:

F = Full Trees
X = Two-Scaffold Limb Trees
Y = One-Scaffold Trees
N = Total number of Insurable Trees
P = Percent Stand
I = Insurable Acres

**Formula for N:** F + X + Y = **N**

**Formula for P**: N ÷ (T* x A*) = **P**

**Formula for I:** A* x P = **I**

**Example of N:** 43 + 3 + 2 = **48**

**Example of P:** 48 trees ÷ (109 trees/acre x 0.6 acres) =

**0.733 rounded to 0.73 percent stand**

**Example of I:** 0.6 tree acres X 0.73 percent stand =

**0.438 rounded to 0.4 acres**

**Note:** Use the formula in (a) and (c) above to determine the trees per acre or (T) and the acres in the orchard or (A) in the equation.

## L. Additional Information

Refer to the SP, CP and BP for additional information on acreage adjustments for orchards (e.g., orchards with less than a 90% percent stand, etc.).

## M. Database Administration for Fresh and Processing

In order to insure acreage as fresh, under both the Apple and Peach crop provisions, the insured must substantiate fresh production in prior years. Although, this is applicable to both crops, the examples provided are for apples. The Apple Crop Insurance Provisions require insureds to have verifiable production records supporting that in one or more of the four most recent crop years, at least 50 percent of the production from the acreage reported as fresh apple acreage, by unit, was sold as fresh. Insureds who do not have separate records, by unit, of fresh apple production in one or more of the last four years but do have records of total fresh apple production, may still qualify for the fresh apple price.

AIPs may consider records of total production (rather than by unit) from one of the four most recent crop years that reflect fresh apple sales to determine if acreage qualifies for the fresh apple price. To illustrate the appropriate APH database construction, the following examples have been provided:

**Example 1:** In this example the insured has certified 5 years of acreage and production for 10 acres of Apples (0054). The insured has marketed at least 50 percent (minimum policy requirement) of their production in 2008 (one of the four most recent crop years) as fresh. The insured has elected to insure their Apples as Fresh for CY 2012.

| **2012** | CROP: APPLES (0054) | | |
|---|---|---|---|
| UNIT # | Practice: Irrigated (002) | | |
| 0001 -0001 | **Type: Fresh (111)** | | |
| YEAR | PRODUCTION | ACRES | YIELD |
| 2007 | 10,650 | 10 | A 1,650 |
| 2008 | 9,850 | 10 | A 985 |
| 2009 | 11,000 | 10 | A 1100 |
| 2010 | 9,600 | 10 | A 960 |
| 2011 | 10,050 | 10 | A 1005 |
| | | | 5700/5 |
| | AVERAGE YIELD: | | 1140 |
| | APPROVED APH: | | 1140 |

## M. Database Administration for Fresh and Processing (Continued)

**Example 2** In this example, the insured has certified 5 years of acreage and production for 10 acres of Apples (0054). In CY 2007 more than 50 percent of the unit was sold as Fresh. In CY 2008 through 2011, more than 50 percent was sold as Processing. An AIP transmitted the APH database for the unit of apples as Fresh in CY 2011. In CY 2011, the requirement to market the crop as Fresh was met in 2007 when during one or more of the four most recent years, 50 percent of the Apples in the unit were sold as Fresh.

For CY 2012, the insured elected to insure the crop as Fresh, however the unit did not meet the requirements of having more than 50 percent of the crop was sold as fresh within the last four years, therefore the acreage would be reported as processing in CY 2012. If in subsequent years (e.g., CY 2013, CY 2014, etc.) more than 50 percent of the crop is successfully marketed as Fresh, the data contained in the Processing APH database would be moved to a Fresh APH database and the acreage could be insured as Fresh.

| **PRIOR YEAR** | | | |
|---|---|---|---|
| **2011** | CROP: APPLES (0054) | | |
| UNIT # | Practice: Irrigated (002) | | |
| 0001-0001 | **Type: Fresh (111)** | | |
| YEAR | PRODUCTION | ACRES | YIELD |
| 2007 | 10,650 | 10 | A 1065 |
| 2008 | 9,850 | 10 | A 985 |
| 2009 | 11,000 | 10 | A 1100 |
| 2010 | 9,600 | 10 | A 960 |
| | | | |
| | | | 4110/4 |
| | AVERAGE YIELD: | | 1028 |
| | APPROVED APH | | 1028 |

| **CURRENT YEAR** | | | |
|---|---|---|---|
| **2012** | CROP: APPLE (0054) | | |
| UNIT # | Practice: Irrigated (002) | | |
| 0001-0001 | **Type: Processing (112)** | | |
| YEAR | PRODUCTION | ACRES | YIELD |
| 2007 | 10,650 | 10 | A 1065 |
| 2008 | 9,850 | 10 | A 985 |
| 2009 | 11,000 | 10 | A 1100 |
| 2010 | 9,600 | 10 | A 960 |
| 2011 | 10,050 | 10 | A 1050 |
| | | | 5160/5 |
| | AVERAGE YIELD: | | 1032 |
| | APPROVED APH | | 1032 |

## M. Database Administration for Fresh and Processing (Continued)

**Example 3:** In this example, the insured has certified 5 years of acreage and production for 10 acres of Apples (0054). The insured wants to establish separate blocks for their acreage so that the portion of their apples marketed from the 5 acre block qualify to be insured as fresh.

The insured has a 5 acre block of Gala Apples designated as Fresh (111) (that have met the requirements of selling greater than 50 percent of the production as fresh within one of the last four years) and a 5 acre block designated as Processing (112). In order to establish separate blocks for their Fresh acreage, the insured has to recertify their acreage and production for at least the most recent year see Para. 1853 and establish their actual/assigned yields see Para. 1856.

| **2012** | CROP: APPLES (0054) | | |
|---|---|---|---|
| UNIT # | Practice: Irrigated (002) | | |
| 0001-0001 | **Type: Fresh (111)** | | |
| YEAR | PRODUCTION | ACRES | YIELD |
| 2007 | 10650 | 10 | A 1065 |
| 2008 | 9850 | 10 | A 985 |
| 2009 | 5200 | 5 | A 1040 |
| 2010 | 4200 | 5 | A 840 |
| 2011 | 4500 | 5 | A 900 |
| | | | 4830/5 |
| | AVERAGE YIELD: | | 966 |
| | APPROVED APH: | | 966 |

| **2012** | CROP: APPLE (0054) | | |
|---|---|---|---|
| UNIT # | Practice: Irrigated (002) | | |
| 0001-0002 | **Type: Processing (112)** | | |
| YEAR | PRODUCTION | ACRES | YIELD |
| 2007 | 10650 | 10 | A 1065 |
| 2008 | 9850 | 10 | A 985 |
| 2009 | 5800 | 5 | A 1160 |
| 2010 | 5400 | 5 | A 1080 |
| 2011 | 5550 | 5 | A 1110 |
| | | | 5400/5 |
| | AVERAGE YIELD: | | 1080 |
| | APPROVED APH: | | 1080 |

## M. Database Administration for Fresh and Processing (Continued)

**Example 4:** In this example, a carryover insured has previously certified 5 years of production for 100 acres of Apples (0054). For CY 2012, the insured had a 20 acre BU (unit 0001-0000) of Gala Apples designated as Processing (112) and two 40 acre BUs designated as Processing (112) (units 0002-0000 and 0003-0000), that the insured would like to insure as fresh for CY 2013. The insured sold 50,000 total bushels from all three units.

Although the insured has supporting evidence for production in CY 2012 for each unit, the insured did not keep Fresh apple production records by unit. Therefore the insured does not meet the CP requirement of verifiable production records supporting at least 50 percent of the production from the acreage reported as Fresh apple acreage, by unit, was sold as Fresh in one or more of the four most recent crop years. However, of the 50,000 total bushels sold in CY 2012, the insured has production records verifying that at least 26,000 bushels were sold as Fresh (meeting the exception of at least 50 percent of the total apple production was sold as Fresh). Thus, the insured has met the requirement to insure the BUs as Fresh for CY 2013 see Para. 1943.

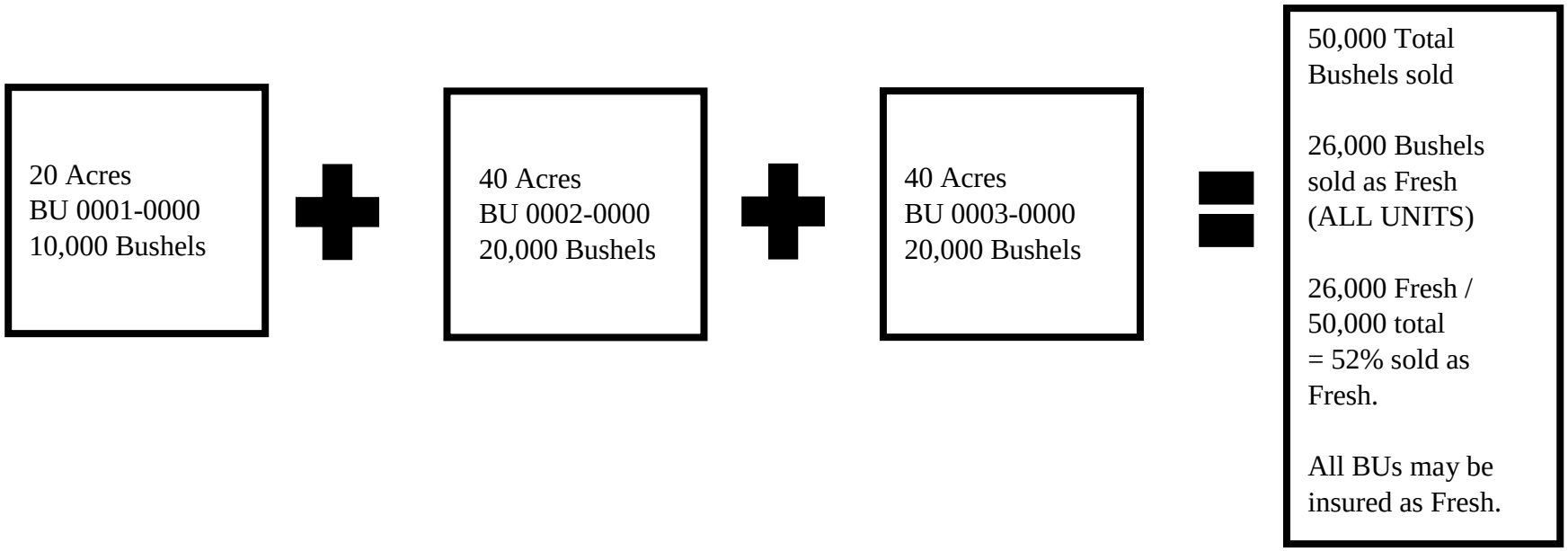

## M. Database Administration for Fresh and Processing (Continued)

**Example 5:** In this example, a carryover insured has previously certified 5 years of production for 100 acres of Apples (0054). For CY 2012, the insured had a 20 acre BU (unit 0001-0000) of Gala Apples designated as Processing (112) and two 40 acre BUs of Gala Apples designated as Processing (112) (BU 0002-0000 and BU 0003-0000) that the insured would like to insure as Fresh for CY 2013. In CY 2012, the insured sold 50,000 total bushels from all three BUs; however, the insured did not keep production records by BU for the Fresh apple production.

In order for the insured to insure the BUs as Fresh in CY 2013, at least 50 percent of the total production from all of the apple acreage must have been sold as Fresh within one of the last four years. Of the 50,000 total bushels sold, the insured has production records verifying 4,000 bushels were sold as Fresh in CY 2012. The insured has not met the requirements to insure the BUs as Fresh in CY 2013 based on CY 2012 production. Since the insured does not have production records supporting 50 percent of the total production was sold as Fresh in any of the four most recent crop years see Sec. 19J(2), all the acreage must be reported as Processing in CY 2013.

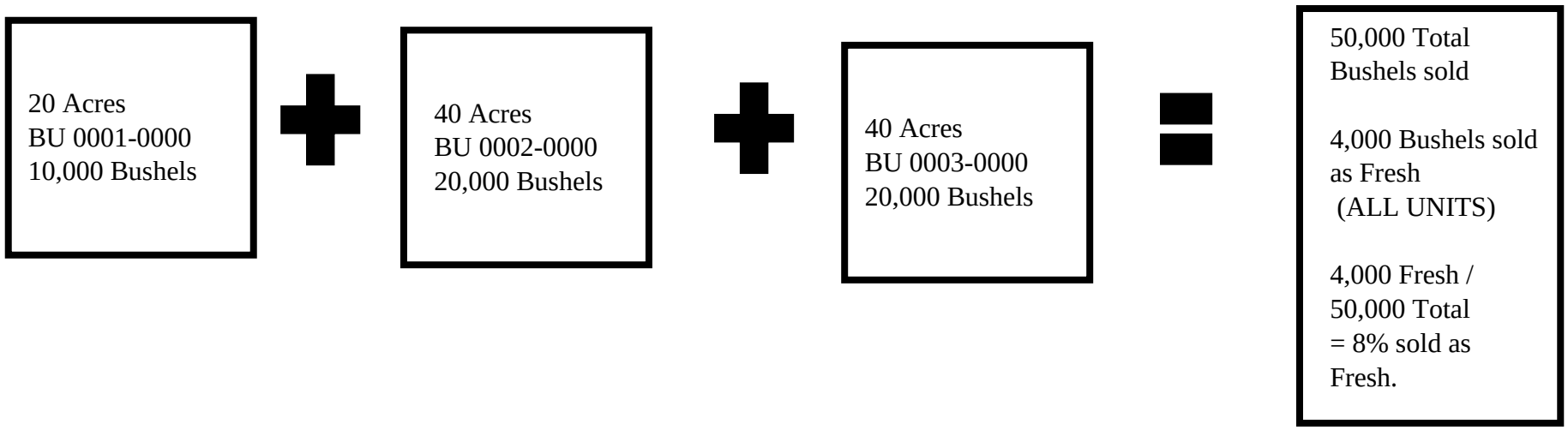

## M. Database Administration for Fresh and Processing (Continued)

**Example 6:** In this example, a carryover insured has previously certified 5 years of production for 100 acres of Apples (0054). The insured has recertified their acreage and production for the most recent year see Sec.19G (3)(f) and has elected to insure 20 acres of their Fresh apple acreage as Fresh for CY 2013. For CY 2012, the insured had a 20 acre block of Gala Apples designated as Fresh (111) (that met the requirements of selling greater than 50 percent of the production as Fresh within one of the last four years) and two 40 acre blocks designated as Processing (112) within one BU. The insured sold 40,000 total bushels from both of the Processing blocks (Blocks 2 and 3), and 10,000 total bushels from their Fresh block (Block 1) in 2012.

The insured did not keep production records designating the Fresh production by block; however, the insured has production records for the BU for 50,000 total bushels sold (from all the blocks within the BU), of which 6,000 bushels were sold as Fresh. The BU does not meet the requirements to be insured as Fresh for CY 2013. However, the 20 acre block designated as Fresh (Block 1) has met the requirement to be insured as Fresh in CY 2013 based on the total amount of bushels sold as Fresh within the BU (Block 1 consisted of 10,000 bushels and 6,000 bushels were sold as Fresh for the BU. Since 6,000 bushels is greater than 5,000 bushels (50 percent of 10,000), Block 1 may be designated as Fresh in 2013).

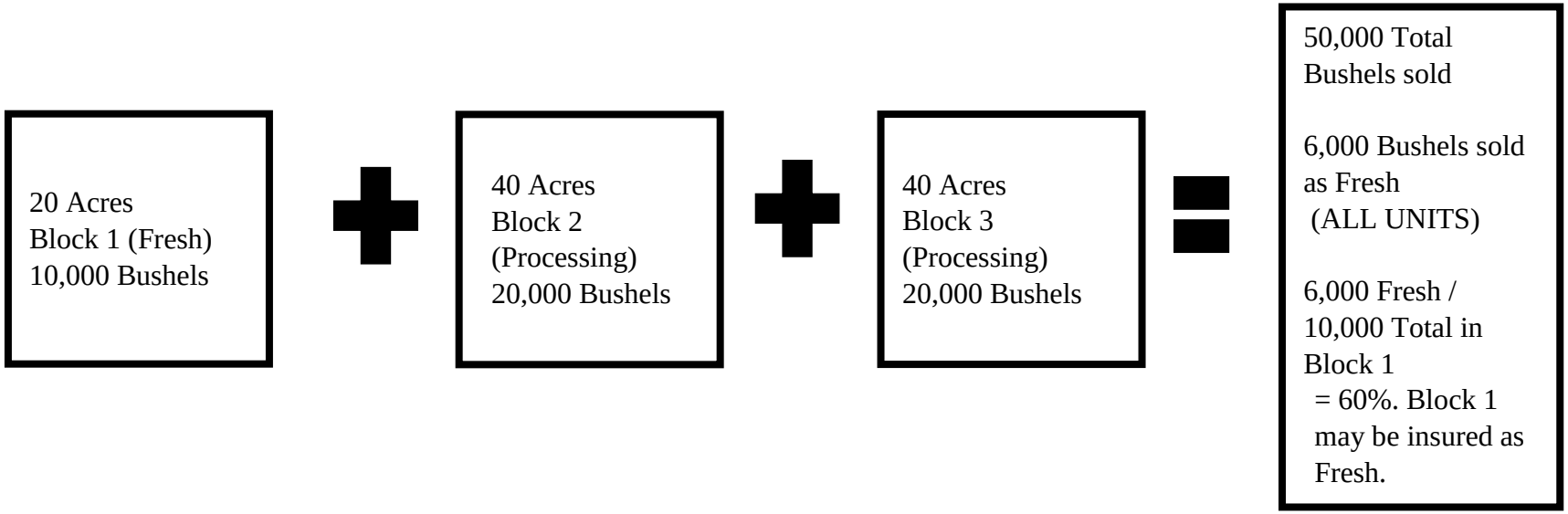

## N. APH Databases for Transitional and Certified Organic- Prohibited Substances

The insured will have to go back to the Transitional APH database and transition block 002 again for 36-months as required by the NOP until certification was re-established for block 002.

**APH BLOCK PRODUCTION WORKSHEET**
**(For illustration purposes ONLY)**

| NAME | POLICY NUMBER | UNIT NUMBER |
|---|---|---|
| I. M. INSURED | | |
| (a) CROP | STATE | LEGAL DESCRIPTION |
| APPLES | NC (37) | |
| CROP YEAR | COUNTY | FSA FN/TRACT/FIELD |
| 2012 | Henderson (089) | 4312 |

| YEAR | (b) PRACTICE | (d) TYPE | PRODUCTION | ACRES | YIELD |
|---|---|---|---|---|---|
| | (d) VARIETY/OTHER | | | | |
| | BLOCK NO.: | Mo/Yr | | | |
| | SET OUT YEAR: | DENSITY: | | | |
| | | | | | |
| 2013 | | | | | |
| 2014 | | | | | |
| 2015 | | | | | |
| 2016 | | | | | |
| | | TOTAL | | | |
| | | T-YIELD ADJ. | | | |
| | | APPROVED YIELD | 682 | | |

| YEAR | (b) PRACTICE 712 | (c) TYPE 114 | PRODUCTION | ACRES | YIELD |
|---|---|---|---|---|---|
| | (d) VARIETY/OTHER Fuji | | | | |
| | BLOCK NO.: 002 | Mo/Yr 05/2007 | | | |
| | SET OUT YEAR: 2002 | DENSITY: | | | |
| | | | | | |
| 2013 | | | | | F504 |
| 2014 | | | | | F504 |
| 2015 | | | | | F504 |
| 2016 | | | | | G610 |
| | | TOTAL | | | 2,122 |
| | | T-YIELD ADJ. | | | 380 |
| | | APPROVED YIELD | 531 | | |

| YEAR | (b) PRACTICE | (c) TYPE | PRODUCTION | ACRES | YIELD |
|---|---|---|---|---|---|
| | (d) VARIETY/OTHER | | | | |
| | BLOCK NO.: | Mo/Yr | | | |
| | SET OUT YEAR: | DENSITY: | | | |
| | | | | | |
| 2013 | | | | | |
| 2014 | | | | | |
| 2015 | | | | | |
| 2016 | | | | | |
| | | TOTAL | | | |
| | | T-YIELD ADJ. | | | |
| | | APPROVED YIELD | | | |

SAMPL

## O. APH databases for Grafted Apple Acreage in the States of Idaho, Oregon, and Washington

The following table, Table 1, shows percentages that are applied to the applicable T-Yield, in the Actuarial Document, for the LEAF YEAR and SET OUT YEAR of **initial planting** of the grafted acreage (see also Para. 1864 A):

Table 1

| Density (trees/acre) | 1st year after grafting | 2nd year after grafting | 3rd year after grafting | 4th year after grafting | 5th year after grafting |
|---|---|---|---|---|---|
| 0-299 | 0 % | 30 % | 60 % | 90 % | 100 % |
| 300 & greater | 10 % | 50 % | 70 % | 100 % | 100 % |

**Example APH Database used throughout Grafted Apple Examples 1-3**

| | |
|---|---|
| Acres | 10 |
| State | Washington (53) |
| County | Chelan (007 |
| Sub-County | 001 |
| Type | Fresh 111 |
| Density | 360 |
| Set Out Year | April 2012 |
| Grafted Year | May 2016 |

Formula to be used when calculating the leaf year to be used with the 'F' yield descriptor for the grafted APH databases:

(Crop Year – Initial Set Out Year) + 1 = Leaf Year 2019 (leaf year) – 2012 (set out year) = 7 + 1 = 8 Age = 8 and Density = 360 Trees/Acres

Based on the age and density of the un-grafted acreage, the 2019 T-Yield in the Actuarial Document is 905 Boxes per acres:

## O. APH databases for Grafted Apple ……. of Idaho, Oregon, and Washington (Continued)

**Example 1. Establish a new APH database for a *completely* grafted orchard AFTER grafting**

| **Transitional Yields** | | | |
|---|---|---|---|
| **Density** | | **Leaf Year** | **Box** |
| **Low** | **High** | | |
| **300** | **599** | **7** | **760.00** |
| | | **8** | **905.00** |
| | | **9** | **1000.00** |

The entire 10 acres was grafted May 2015.

Once the grafted acreage meets policy minimums, the APH database for the following year (1st year of insurance) will be a combination of one year of actual production, substantiating production minimums, and three years of the adjusted T-Yield, determined as follows:

Grafted T-Yield = (Un-grafted T-Yield) 905 x (Grafting T-Yield Factor) .70 = 634

| **2018 APH Database – Unit 0001-0001** | | | |
|---|---|---|---|
| Year | Prod | Acres | Yield |
| 2012 | 5800 | 10.0 | A580 |
| 2013 | 6100 | 10.0 | A610 |
| 2014 | 6250 | 10.0 | A625 |
| 2015 | 8000 | 10.0 | A800 |

| **2019 APH Database – Unit 0001-0001** | | | |
|---|---|---|---|
| Year | Prod | Acres | Yield |
| 2015 | | 0.0 | F634 |
| 2016 | | 0.0 | F634 |
| 2017 | | 0.0 | F634 |
| 2018 | 6800 | 10.0 | A680 |
| **Approved APH 2582/4 = 646** | | | |

For subsequent crop year(s); ‘F’ yields (representing the adjusted T-yield for grafted acreage shown in Example 1 above) are not “fixed” in the APH database, but are updated each crop year according to the grafting percentages contained in Table 1.

Steps 1 and 2 will be repeated for the next three crop years until all ‘F’ yield descriptors are replaced with actual production using ‘A’ yield descriptors as shown below:

**O. APH databases for Grafted Apple ……. of Idaho, Oregon, and Washington (Continued)**

| **Crop Year 2020 - APH Database for Unit 0001-0001** | | | |
|---|---|---|---|
| Year | Prod | Acres | Yield |
| 2015 | | 0.0 | |
| 2016 | | 0.0 | F1000 |
| 2017 | | 0.0 | F1000 |
| 2018 | 6800 | 10.0 | A680 |
| 2019 | 14000 | 10.0 | A1400 |
| **Approved APH 4600/4 = 1150** | | | |

Submitting the new APH database to PASS:

The new APH database is NOT submitted to PASS until the minimum production requirement has been reached.

The APH database established prior to grafting is NOT submitted to PASS. Only maintained at the AIP level.

**Note:** For the purposes of these grafted apples the 'F' yield will updated each year, manually by the AIP. PASS does not take into consideration the Grafting T-yield Factor established under these procedures.

**Example 2. Establish a new APH database AFTER grafting for orchard with less than 20% of the acreage *partially* grafted**

One out of ten acres were grafted in May of 2015.

Once the partially grafted acreage meets policy minimums, the APH database for the following year (1st year of insurance) will be a combination of one year of actual production, substantiating production minimums, and three years of the adjusted T-Yield.

For the grafted one acre that was originally planted, instead of receiving a T-Yield based solely on the year the trees were grafted (i.e. four year old trees; 2019-2016 = 3 + 1 = 4), the grafted 1 acre receives an adjusted T-Yield using the alternative T-Yield table for grafted acreage which gives credit for the age and reserves of the rootstock, resulting in a T-yield of **634** as follows:

**Grafted T-Yield = (Un-grafted T-Yield) 905 x (Grafting T-Yield Factor) .70 = 634**

**O. APH databases for Grafted Apple ……. of Idaho, Oregon, and Washington (Continued)**

| **2019 APH Database – Unit 0001-0001 – Grafted Acreage (Block A)** | | | |
|---|---|---|---|
| Year | Prod | Acres | Yield |
| 2014 | | 0.0 | |
| 2015 | | 0.0 | F634 |
| 2016 | | 0.0 | F634 |
| 2017 | | 0.0 | F634 |
| 2018 | 3900 | 1.0 | A780 |
| **Approved APH 2682/4 = 671** | | | |

| **2019 APH Database – Unit 0001-0001 – Un-Grafted Acreage (Block B)** | | | |
|---|---|---|---|
| Year | Prod | Acres | Yield |
| 2014 | 7500 | 10.0 | A750 |
| 2015 | 7000 | 9.0 | A700 |
| 2016 | 3375 | 9.0 | A675 |
| 2017 | 3125 | 9.0 | A625 |
| 2018 | 3700 | 9.0 | A740 |
| **Approved APH 3490/4 = 698** | | | |

For subsequent crop year(s); 'F' yields (representing the adjusted T-yield for grafted acreage shown in Example 1 above) are not "fixed" in the APH database, but are updated each crop year according to the grafting percentages contained in Table 1.

Steps 2 and 3 will be repeated for the next three crop years until all 'F' yield descriptors are replaced with actual production using 'A' yield descriptors (as shown in Example 1, Step 3 above).

Submitting the new APH database to PASS:

The new APH database is NOT submitted to PASS until the minimum production requirement has been reached.

The APH database established prior to grafting is NOT submitted to PASS. Only maintained at the AIP level.

**Note**: For the purposes of these grafted apples the 'F' yield will be updated each year, manually by the AIP. PASS does not take into consideration the Grafting T-yield Factor established under these procedures.

**Reserved**

**Reserved (continued)**

## A. Hybrid Seed Corn or Sorghum Seed Notice of Loss

Hybrid Seed Corn or Hybrid Sorghum Seed Notice of Loss.

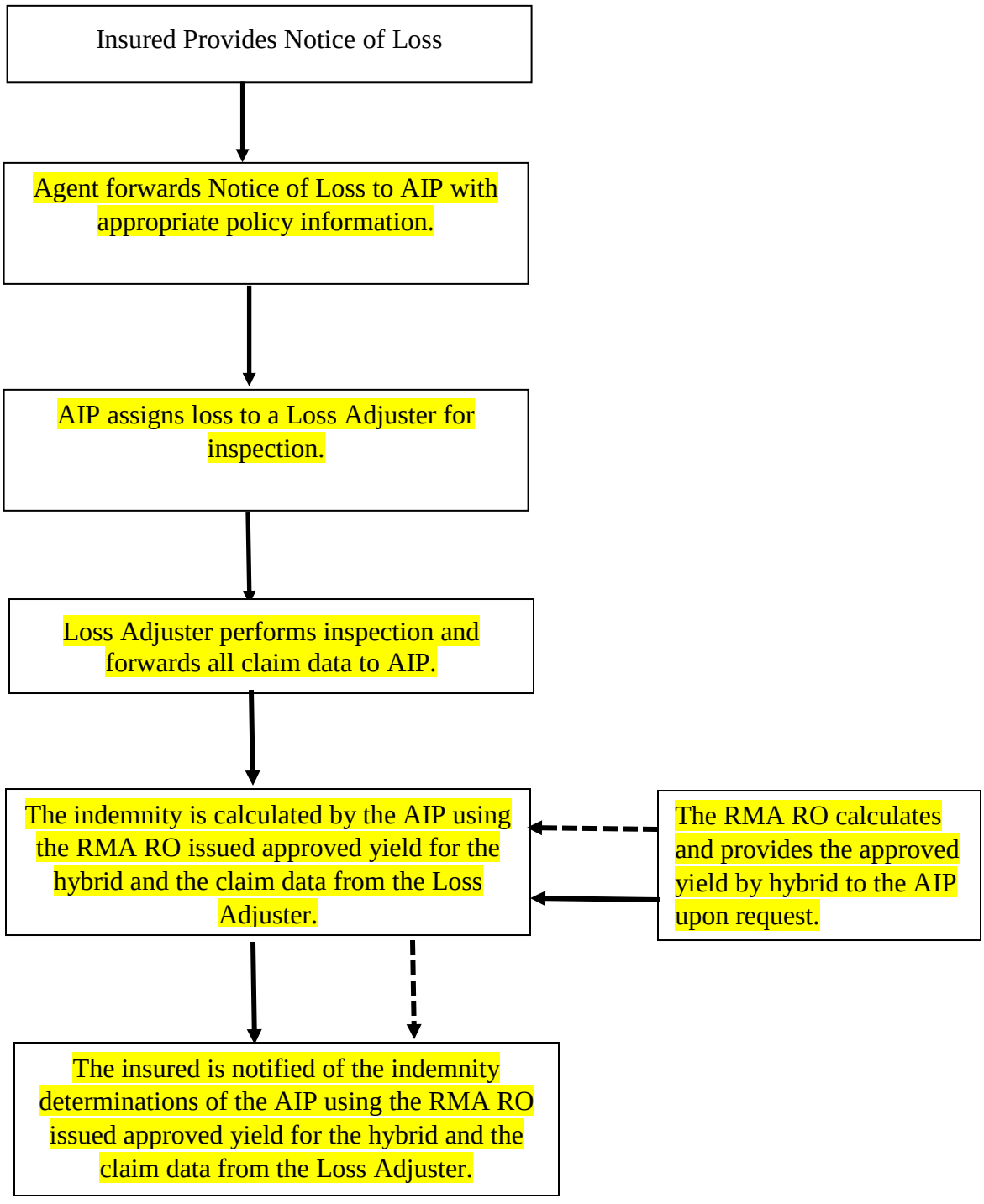

## B. Hybrid Seed Corn or Sorghum Seed Yield Request Required Information

| ELEMENT | REQUIRED INFORMATION |
|---|---|
| **AIP** | Enter the AIP |
| **Commodity** | Enter the crop, type, and practice. |
| **Seed Company** | Identify the seed company name and, ID number. |
| **Facility/Plant Location** | Enter the facility's town location. |
| **Hybrid Identification** | Enter the appropriate hybrid identification number/code when missing hybrid ID from published data. * |

*Note: Hybrid Identification is only required when there is a missing hybrid and the AIP needs to request the missing hybrid.

## C. Hybrid Seed Corn or Sorghum Seed Approved Yield Process

Hybrid Seed Approved Yield Process

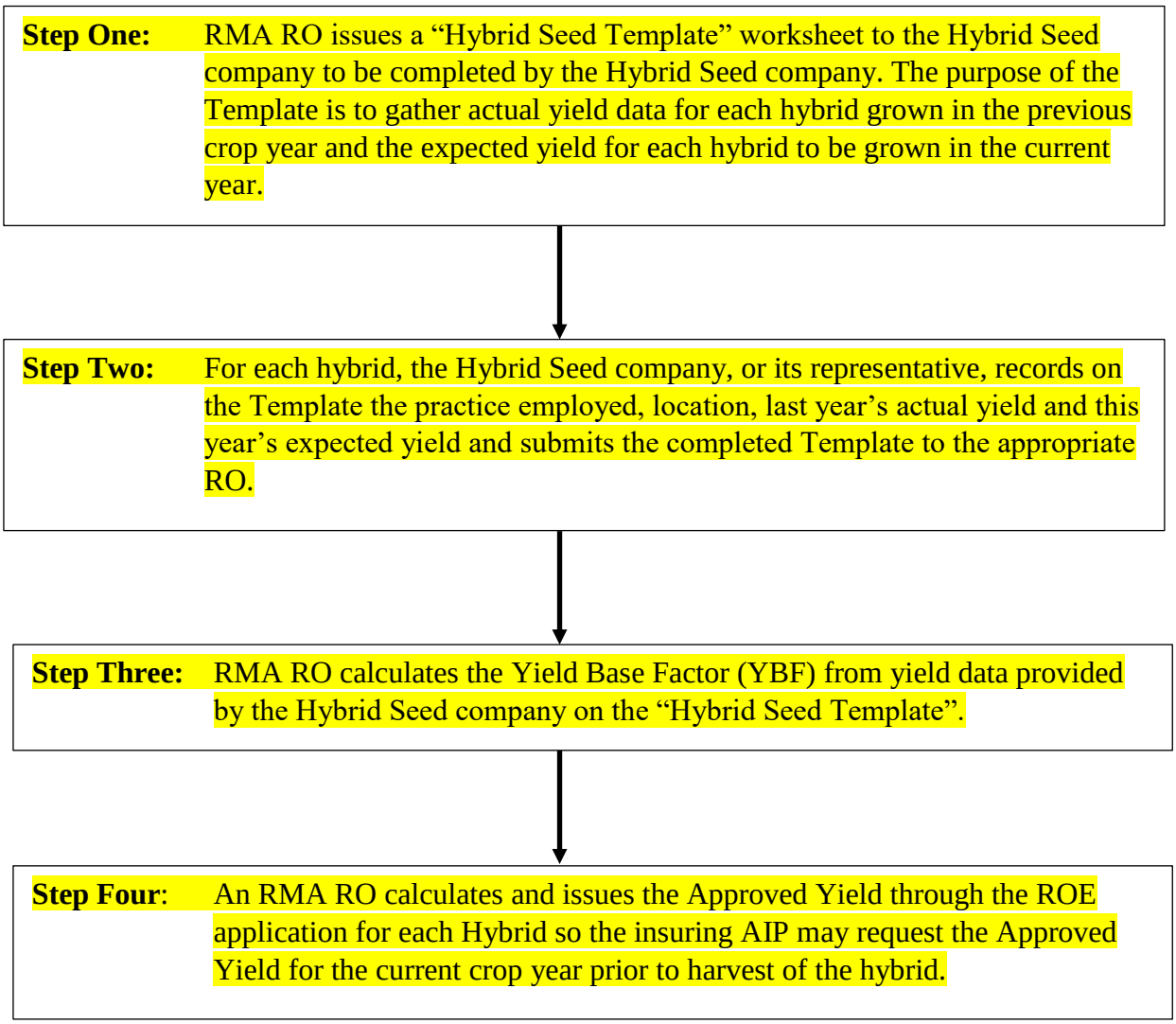

## D. Florida Citrus Fruit Producer's Pre-Acceptance Worksheet

### PRODUCER'S PRE-ACCEPTANCE WORKSHEET (FLORIDA CITRUS FRUIT) and BLOCK MAP

| Applicant/Insured's Name | Approved Insurance Provider's Name | Policy Number | Legal Description (may enter here or individually in "Legal Description" below): Section | Township | Range | FSA Farm/Tract/Field Number |
|---|---|---|---|---|---|---|
| Applicant/Insured's Address & Telephone Number | AIP's Street or Mailing Address | County | | | | |
| | | Crop Year / Unit Number | Other Land Identifier (e.g., Spanish land grants, metes and bounds, etc.) | | | |

| Citrus Fruit Group | Block Number | Acres in Block | Planting Pattern | Tree Spacing | Number of Trees | Number of Trees Per Acre | Month & Year Tpwkd or Bkhd | Number of Trees Tpwkd or Bkhd | Insurable or Uninsurable | Date Set Out/Grafted | Percent Stand | Organic Practice | Est. Prod. (Boxes) |
|---|---|---|---|---|---|---|---|---|---|---|---|---|---|
| | | | | | | | | | | | | | |
| | | | | | | | | | | | | | |
| | | | | | | | | | | | | | |
| | | | | | | | | | | | | | |
| | | | | | | | | | | | | | |
| | | | | | | | | | | | | | |
| TOTALS | | | | | | | | | | | | | |

EXAMPLE

| Date of Last Inspection | Has the dollar amount of insurance for the insured crop been previously adjusted due to a reduction in the crop's production potential? ☐Yes ☐No |
|---|---|
| Has an adjustment been applied to the crop's insurable acres resulting in a comparable reduction in yield? ☐Yes ☐No | Has damage (e.g., disease, hail, freeze) occurred to the trees that will reduce the crop's production potential? ☐ Yes ☐ No |
| Have cultural practices or production methods (e.g., buckhorning, transitioning to organic) been performed that will reduce the insured's crop's production? ☐ Yes ☐ No | Have trees been removed, buckhorned, top-worked or replaced with uninsurable trees resulting in a change of the original plant stand for any reported insurable acreage? ☐ Yes ☐No |
| | **Insured's Signature:** |
| | **Insured's Signature:** Date |

## E. Macadamia Orchard Inspection Report

**MACADAMIA ORCHARD INSPECTION REPORT**

| Applicant or Insured | Country or Island | Contract Number |
|---|---|---|
| I.M. Insured | HAWAII | XX-XXX-XXXXX |

Applicant/Insured Address

RR ONE
HILO, HAWAII

Telephone Number (808) XXX-XXX

Note condition of other Macadamia orchard owned or managed by applicant or insured

N/A

Is Orchard Managed by Owner? [ ] NO [X] YES

If "No" who manages it?

Telephone Number: (808)XXX-XXXX

Is orchard located in an established Macadamia area? YES

| UNIT NUMBER | VARIETY | ACRES IN PLOT | TREE SPACING | TREE COUNT | YEAR SET | TREE CONDITION | RATE AREA | WEED CONTROL MEASURES |
|---|---|---|---|---|---|---|---|---|
| 00101 | KAU | 10.0 | 15 X 25 | 1920 | MM/YYYY | ACCEPTABLE | D05 | NONE |
| 00102 | MAKAI | 10.3 | 15 X 25 | 1980 | MM/YYYY | ACCEPTABLE | D05 | NONE |
| 00103 | KAKEA | 5.2 | 15 X 25 | 987 | MM/YYYY | ACCEPTABLE | D05 | NONE |
| | | | | | | | | |
| | | | | | | | | |
| 18 EXCLUDED ACREAGE | | | | | | | | |
| LOT 11 | KAU | 6.4 | 15 X 25 | 1235 | MM/YYYY | EXCLUDED | N/A | NONE |
| | | | | | | | | |
| | | | | | | | | |

EXAMPLE

The Acreage Covered By The Above Contract Was Inspected On Date Shown Below With The Following Results:

A. X Nothing Found To Require A Change In The Data Reported.

B. _____ Data Reported Was Found To Be Such That _____ Was Prepared.

20 REMARKS

UNIT 00101: Trees on moderate slope, leeward exposure.
UNIT 00102: Some trees on windward exposure.
LOT 11: Trees uninsurable. Does not meet minimum age requirements of crop provisions.

| Is application/acreage report recommended for acceptance? | Code Number | Orchard Inspector's Signature | Date |
|---|---|---|---|
| [X] YES [ ] NO | XXXX | *I. M. INSPECTOR* | MM/DD/YYYY |

## F. Florida Citrus, Dollar Plan of Insurance, Percent Stand Example

First, determine the number of measured insurable land acres in the grove. Next, make percent stand adjustments to determine the adjusted insurable acres. See the illustration and examples below for determination of number of trees per acre and percent stand of groves with replanting at a higher number of trees per acre.

To determine measured land acres:

(1) measure the perimeter of the citrus block or sub-block to be insured and
(2) subtract unplanted areas within the perimeter, field roads, canals and/or other unplanted areas not part of the planting pattern.

Determine the percent stand based on the planting pattern as illustrated below. The large circles are insurable trees (DO3), the small circles are new interplanted trees, and the circles with an "X" are either dead or missing trees.

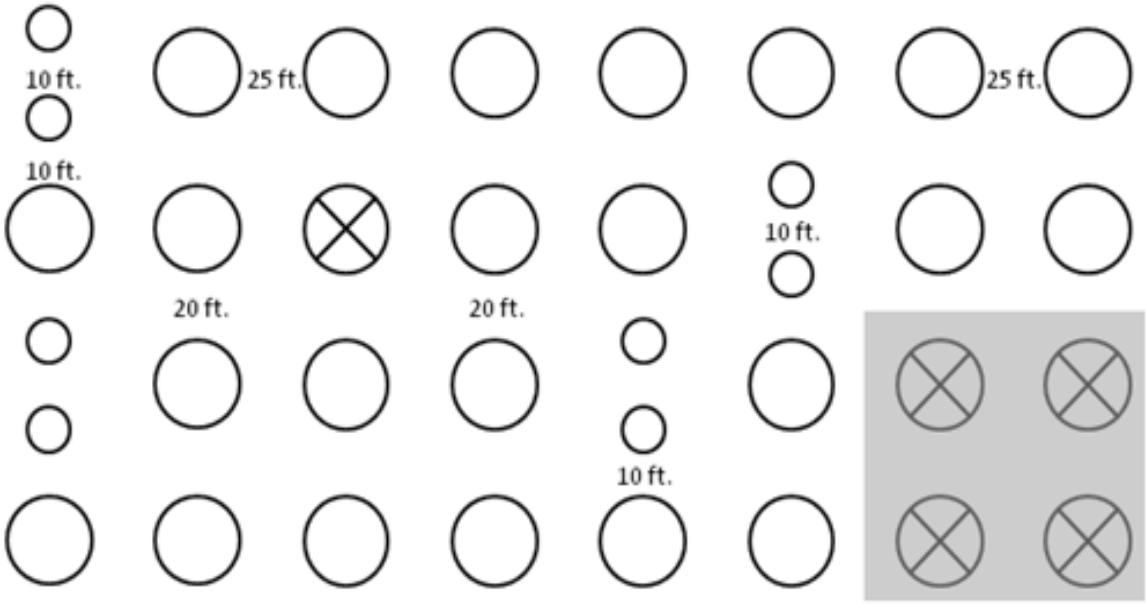


**Example 1:** Based upon the original planting 25' X 20' the number of trees per acre is 28.

Only insurable trees are counted, using the current CIH procedure.

- The interplanted trees are not insurable trees, and
- The dead or missing trees shown in the lower right corner are in a separate sub-block and excluded from measurements in determining acres.

Therefore, the total trees for determining a 100 percent stand would now be 28 which is the original planting pattern excluding the sub-block.

## F. Florida Citrus, Dollar Plan of Insurance, Percent Stand Example (continued)

The number of insurable trees is 23. Percent stand is 82% (23 ÷ 28) and is used to adjust the new measured acres.

**Example 2:** If the interplanted trees are insurable, the number of insurable trees is 31 trees (23 original trees + 8 replanted insurable trees) and 5 trees are dead/missing.

- The dead/missing trees shown in the lower right corner of the illustration above are in a separate sub-block and excluded from measurements in determining acres. The total trees for determining a 100 percent stand would be 32 (23 original trees + 8 replanted + 1 dead tree).

- The percent stand is 97 percent (31 ÷ 32).

Since the insurable interplanted trees are the same crop type, acreage is not prorated as provided in the Florida Citrus Fruit Crop Provisions Section 7 or CIH Part 20.

## G. Summary of Revenue History (SRH)

| ELEMENT | REQUIRED INFORMATION |
|---|---|
| **Crop Year** | Appropriate crop year(s) for revenue being reported. |
| **Net Acres** | Applicable acreage of pecans multiplied by insureds share. |
| **Pounds Production** | Total pounds of harvested and/or appraised pecans, insured's share only, (in-shell basis rounded to the nearest whole pound). |
| **Gross Sales** | Pounds harvested and/or appraised pecans times the applicable in-shell average price (may be shown as fixed price, Agricultural Marketing Service (AMS) of the USDA prices only are applicable for direct market that is insurable), reported in dollars and cents, insured's share only. |
| **Average Gross Sales** | Enter the yield descriptor (A or B), followed by the Average Gross Sales, the Gross Sales (item 4) divided by the Net Acres (item 2) rounded to whole dollars. |
| **Pre-Harvest Appraisal** | Check this block if a Pre-Harvest Appraisal was completed (required if direct marketed or a loss was reported). |
| **Total Number of Years** | Enter the applicable total number of years. |
| **Total Average Gross Sales per Acre** | Enter the total of the Average Gross Sales in column 5. |
| **Approved Average Revenue per Acre** | Average Gross Sales Per Acre (item 8) divided by the Total Number of Years (item 7) rounded to whole dollars. |

## G. Summary of Revenue History (SRH) (Continued)

| SUMMARY OF REVENUE HISTORY | | | | | |
|---|---|---|---|---|---|
| CROP YEAR(s): | | INSURED'S NAME & ADDRESS:<br>PHONE: | | AGENCY OR SERVICING OFFICE:<br>PHONE: AGENT CODE: | |
| CONTRACT NUMBER: | | OTHER PERSON: | | INSURANCE PROVIDER:<br>PHONE: COMPANY CODE: | |
| UNIT NUMBER: | | FSA FN: | LEGAL DESCRIPTION:<br>SECTION TOWNSHIP RANGE | | PRACTICE: |
| INSURABLE or UNINSURABLE | NUMBER OF TREES: | COUNTY: | STATE: | | PRE-ACCEPTANCE PERENNIAL CROP INSPECTION REPORT DATE: |
| YEAR<br>1 | NET ACRES<br>2 | POUNDS PRODUCTION<br>3 | GROSS SALES<br>4 | AVERAGE GROSS SALES<br>5 | PRE-HARVEST APPRAISAL<br>6 |
| | | | | | |
| | | | | | |
| | | | | |

**Reserved**

**Reserved (continued)**

## RO Determined Yield Type, Yield Limitation Flag and Rate Yield Chart

| RO Determined Yield Type | Applicable Crop | *Other Explanation* | Special Case Yield Indicator | Rate Yield | YA | Yield Limitation Flag YLF (applies whether RO UG or RO DY) |
|---|---|---|---|---|---|---|
| **Underage Crop** | Category C | | UC | Equal Approved Yield | No | 11 |
| **Higher Yield Request** | Category C & Pecan Revenue | | H | Equal Average Yield | No | 01 |
| **Change in Practice or Production Methods** | Category C & Pecan Revenue | | P | Lower of Average or Approved Yield | No | If Increase in Approved Yield, YLF = 01 |
| | Category C & Pecan Revenue | | PM | Lower of Average or Approved Yield | No | If Decrease in Approved Yield, YLF = 11 |
| | Category C | *Non-Conventional/ Sustainable Practice* | NS | Equal Approved Yield | No | 11 |
| | Category C | *Non-Conventional Farming Practice* | N | Equal Approved Yield | No | 11 |
| **High Variability Yield Adjustment (AB/DT)** | Category C | *Downward Trending & Alternate Bearing* | F (Adjusted by RO DY) | Dependent upon authorization | If authorized by RO | • If Approved Yield Increased and no YA then YLF = 01;<br>• If Approved Yield Increased & YA = 09 or YLF 12 (surcharge applies if the crop is contained in chart below);<br>• If Approved Yield Decreased & YA applies = 11 or YLF 13 (surcharge applies if crop is contained in chart below);<br>• If Approved Yield Decreased and no YA then YLF = 11 |

## RO Determined Yield Type, Yield Limitation Flag and Rate Yield Chart (Continued)

| RO Determined Yield Type | Applicable Crop | *Other Explanation* | Special Case Yield Indicator | Rate Yield | YA | Yield Limitation Flag (applies whether RO UG or RO DY) |
|---|---|---|---|---|---|---|
| **Minimum Production Requirement** | Category C | | M | Equal Approved Yield | No | 11 |
| **Variable T-Yield Exception** | Category B | | N/A | Equal Average Yield | N/A | 01 |
| **Other: When Authorized by RMA in writing** | Category B | N/A Not Currently Authorized | | | | |
| **Other: Unusual Cases & When Authorized in writing by RMA** | Category C | | PB | Dependent upon authorization | If authorized by RO | • If Approved Yield Increased and no YA then YLF = 01;<br>• If Approved Yield Increased & YA = 09 or YLF 12 (surcharge applies if the crop is contained in chart below);<br>• If Approved Yield Decreased & YA applies = 11 or YLF 13 (surcharge applies if crop is contained in chart below);<br>• If Approved Yield Decreased and no YA then YLF = 11 |

## RO Determined Yield Type, Yield Limitation Flag and Rate Yield Chart (Continued)

| RO Determined Yield Type | Applicable Crop | *Other Explanation* | Special Case Yield Indicator | Rate Yield | YA | Yield Limitation Flag (applies whether RO UG or RO DY) |
|---|---|---|---|---|---|---|
| **Irrigation Supply is not adequate** | Category C | | I | Equal Approved Yield | No | 11 |
| **Productivity is Reduced** | Category C | | R | Equal Approved Yield | No | 11 |
| **Productivity is Reduced (Gross Sales Below Approved Average Revenue/Acre & Removed and/or damaged Acreage** | Pecan Revenue | | PS | Equal Approved Yield | No | 11 |
| **Productivity is Reduced - Florida Citrus** | Dollar Plan | | N/A | N/A | N/A | N/A |

## RO Determined Yield Type, Yield Limitation Flag and Rate Yield Chart (Continued)

| Not RO Determined Yields but Special Case Yield Indicators | | | | | | |
|---|---|---|---|---|---|---|
| High Variability Yield Adjustment (AB/DT) | Category C | *Alternate Bearing* | AF (AIP adjusted per CIH) | Equal Approved Yield | No | 11 |
| | Category C | *Downward Trending* | DF (AIP adjusted per CIH) | Equal Approved Yield | No | 11 |
| | Category C | *Downward Trending & Alternate Bearing* | F (AIP Adjusted by Formula in RO UG) | **Dependent upon authorization** | **No, unless specified by the RO UG.** | • If Approved Yield Increased and no YA then YLF = 01;<br>• If Approved Yield Increased & YA = 09 or YLF 12 (surcharge applies if the crop is contained in chart below);<br>• If Approved Yield Decreased & YA applies = 11 or YLF 13 (surcharge applies if crop is contained in chart below);<br>If Approved Yield Decreased and no YA then YLF = 11 |
| | Category C | *Downward Trending & Alternate Bearing* | D (Met AB or DT CIH test, but waived modification by CIH formula and adjusted by RO UG) | | **No, unless specified by the RO UG.** | • If Approved Yield Increased and no YA then YLF = 01;<br>• If Approved Yield Increased & YA = 09 or YLF 12 (surcharge applies if the crop is contained in chart below);<br>• If Approved Yield Decreased & YA applies = 11 or YLF 13 (surcharge applies if crop is contained in chart below);<br>If Approved Yield Decreased and no YA then YLF = 11 |

| |
|---|
| **Average Yield:** The yield, calculated by totaling the yearly actual yields; assigned yields due to: failure to provide production report, excessive yields, and second crop planted without double crop history on prevented planted acreage, and, adjusted or unadjusted T-Yields and dividing the total by the number of yields contained in the database. |
| **Approved Yield:** The yield determined by the Regional Office, according to their procedures, based upon documentation submitted by the producer through the AIP, used to determine the guarantee. |
| **Yield Descriptor:** The applicable yield descriptor as provided in CIH Exhibit 15W. or a "F" yield descriptor IF provided by the Regional Office through RO DY or through RO UG. |
| **Yield Indicator:** "F" is the yield indicator for all Regional Office Determined Yields when authorized by a RO DY. Yield Indicators for yields authorized through RO UG, are the applicable Yield Indicators found in CIH Exhibit 15V (including applicable special case indicators). |
| **YE, Cups & Floors:** Are not authorized for RO DY request or Underwriting Guidelines. |
| If YA is applied by the RO through the determined yield or through Underwriting Guidelines then the AIP must send the YA option code on the acreage record through PASS. If YA was elected on a non-contiguous rated crop, then the surcharge flag on the acreage record must also be set to establish the .05 multiplicative rate. The yield record will not include the YA option codes.. |

## RO Determined Yield Type, Yield Limitation Flag and Rate Yield Chart (Continued)

| These crops have a surcharge for Actuarial Documents. If the crop has an *1, then the surcharge for YA is dependent upon the county as provided in the actuarial documents, the surcharge YLF only applies if the actuarial documents identify a 1.05 surcharge for YA. |
|---|
| (0012) Blueberries |
| 0013) Onions |
| (0023) Macadamia Nuts |
| (0029) Walnuts |
| (0033) Forage Production *1 |
| (0034) Peaches *1 |
| (0036) Prunes |
| (0046) Processing Beans |
| (0047) Dry Beans *1 |
| (0053) Grapes |
| (0054) Apples |
| (0060) Figs |
| (0064) Green Peas |
| (0067) Dry Peas *1 |
| (0072) Cabbage |
| (0084) Potatoes *1 |
| (0089) Pears |
| (0092) Plums |
| (0105) Fresh Market Beans |
| (0147) Pumpkins |
| (0156) Sweet Potatoes |

## RO Determined Yield Type, Yield Limitation Flag and Rate Yield Chart (Continued)

| These crops have a surcharge for Actuarial Documents. If the crop has an *1, then the surcharge for YA is dependent upon the county as provided in the actuarial documents, the surcharge YLF only applies if the actuarial documents identify a 1.05 surcharge for YA. (Continued) |
|---|
| (0201) Grapefruit |
| (0202) Lemons |
| (0203) Tangelos |
| (0218) Fresh Apricots |
| (0219) Processing Apricots |
| (0220) Fresh Nectarines |
| (0221) Processing Cling Peaches |
| (0222) Processing Freestone |
| (0223) Fresh Freestone Peaches |
| (0227) Oranges |
| (0309) Mandarins/Tangerines |
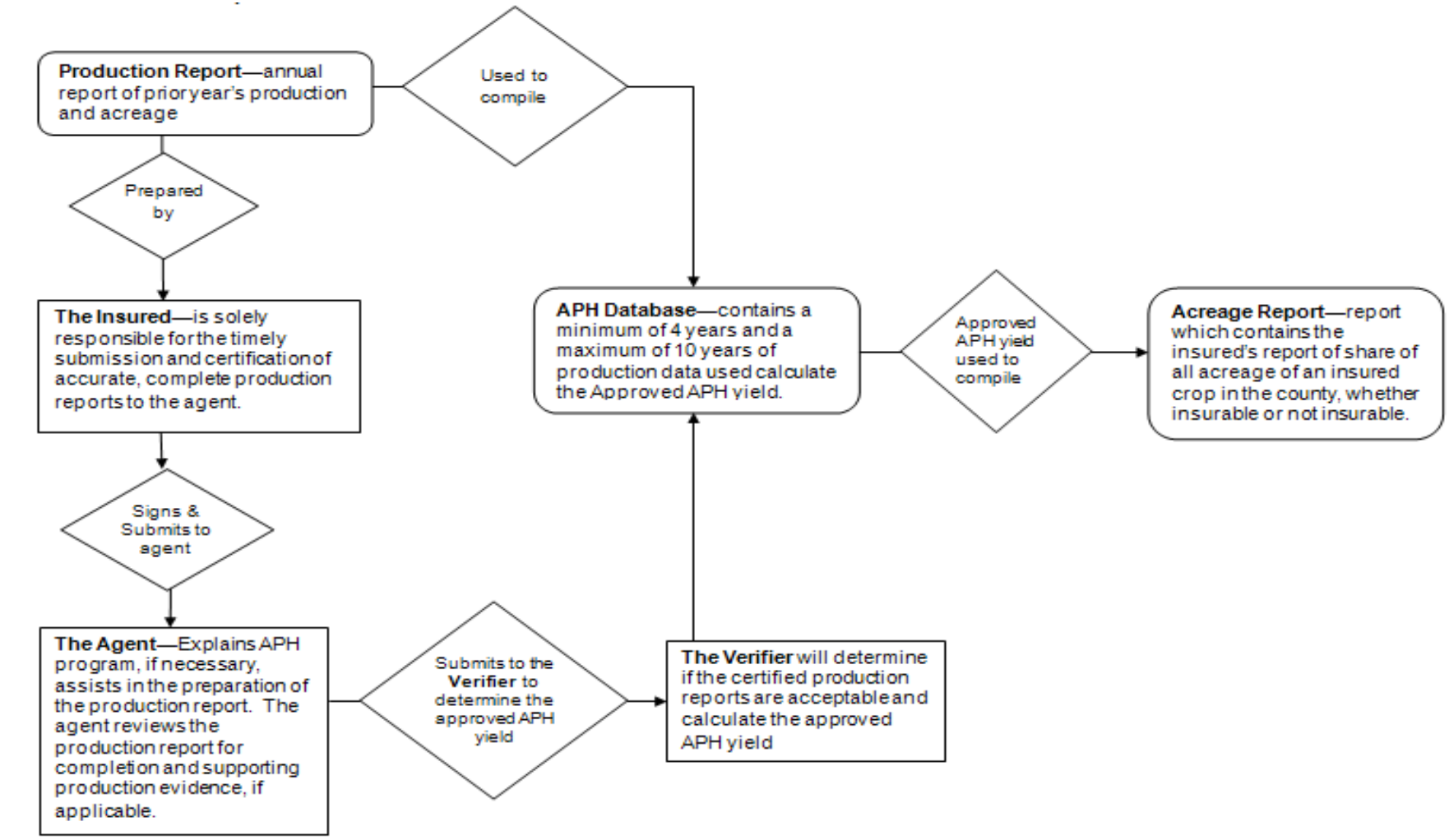
## Production Report and APH Database Flowchart